e-chain®

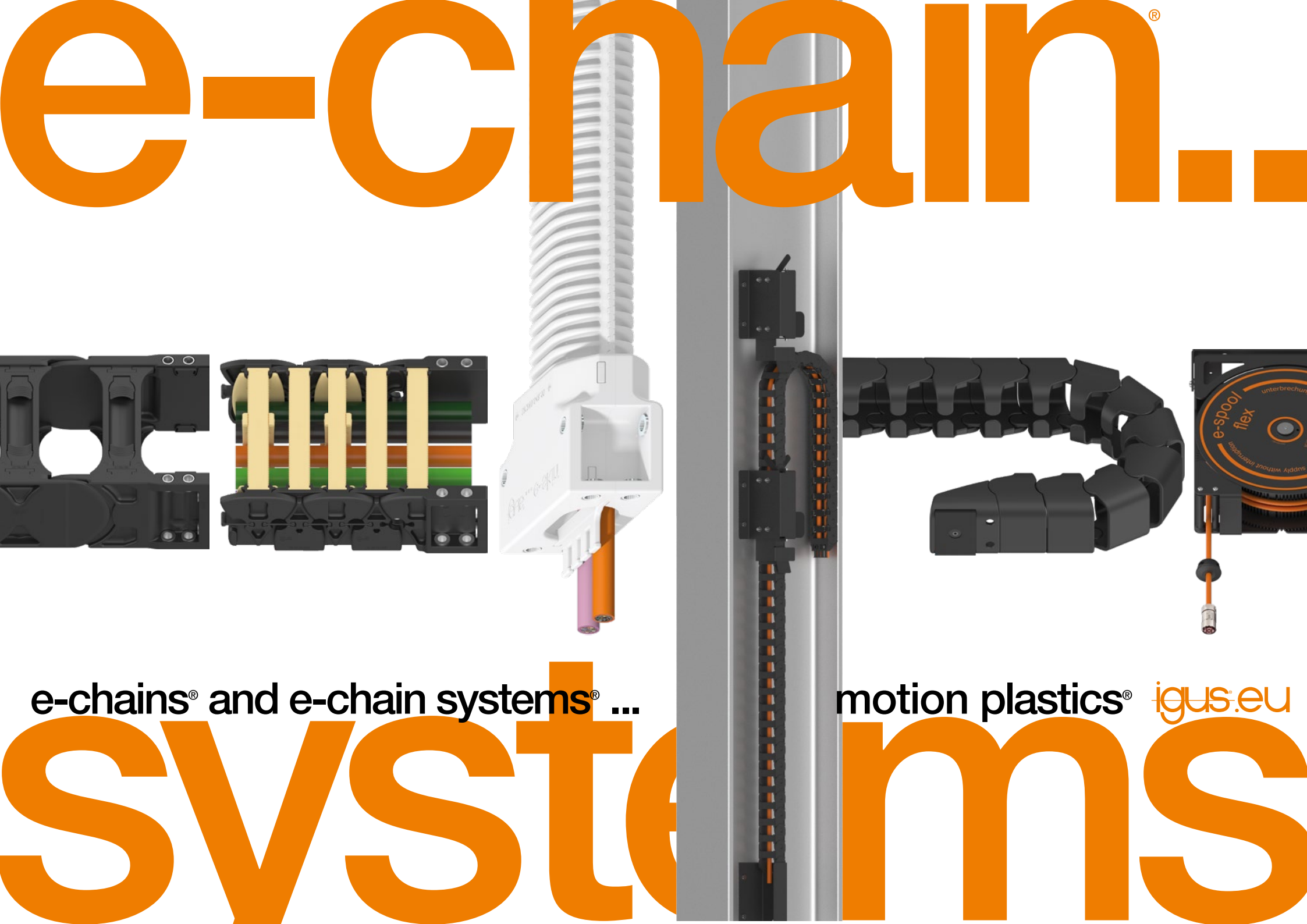

e-chains® and e-chain systems® ...

motion plastics®

igus.eu

systems

igus.eu/e-chains

motion? plastics!
Tech up, Cost down ...
.... the goal of all igus® products is to always offer at least one of these. Other benefits are the fast delivery time, from 24hrs until shipping, plus the service life calculation for nearly all product lines. We will be happy to send you free sample parts for your testing and prototypes. Tested and proven service life. Available immediately with online service life calculation.

Available from stock. Ready to ship in 24 - 48hrs.
The delivery times indicated are the average time until the ordered goods are dispatched.

No minimum order value. No surcharges.
No minimum order value with igus®.
Just order the amount you need.

Chain - Cable - Guarantee
Beyond the legal warranty we also vouch for wear and tear.
With guarantee certificate.

"7 to 8 plus Saturday" service
Monday to Friday 7.00am to 8.00pm
Saturday from 8.00am to 12.00pm.

Order hotline
Phone +49-2203 9649-800
Fax +49-2203 9649-222

Order around-the-clock - www.igus.eu/e-chains
Discover over 100,000 products in our online shop and order around-the-clock!

Calculate and configure online
Download 3D CAD models free of charge and quickly find the product you are looking for with our product finders and intelligent filters.

igus® online live chat
There are many ways to reach us, including our online live chat.

Do you have any questions?
If you have any questions, simply call us or use our online tools at ▶ www.igus.eu



Designing with igus®
Technical design, installation types, applications
From page 36



igus® solutions for simple applications
OCO | easy chain®
From page 82



All-rounder - e-chains® and e-tubes, micro ... mini ... medium
E2.1 micro | E2.1 | R2.1
From page 110



E4 universal modular kit - e-chains® and e-tubes for any application
E4Q | E4QL | E4.1 | E4.1L | E4/light
From page 176



Plastic-steel hybrid e-chains® and e-tubes - tough, shake-proof and compact
YE/YR | YEHD/YRHD
From page 334



Cleanroom energy supply systems as connectable individual profiles or as openable corrugated tubes
e-skin® flat profiles SKF | e-skin® SK/SKS
From page 354

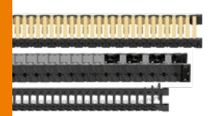

Cleanroom e-chains® and e-tubes - low noise, low vibration and high dynamics
C6 | E6/R6 | E3
From page 368



Solutions for circular movement and multi-axis motion
twisterband | e-spool®
From page 434



Solutions for vertical motion
guidelok slimline P/P.S | e-loop®
From page 460

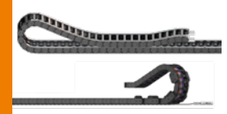

e-chains® for long travel applications
autoglide 5 | P4HD
From page 470



Guide troughs for long travels
Aluminium SuperTrough basic/heavy-duty | Steel guide trough | guidefast | guidelok swing | guidelok horizontal
From page 480



Support tray for unsupported applications
Steel support tray | Aluminium support tray
From page 540



chainfix strain relief
Clamps for maximum holding force | Tiewrap plates bolted or to clip-on | Clip-on solutions
From page 548

Tech up. Cost down.



Dear customer,

In this catalogue, we show you the current standard range of our energy chains, from the proven top-sellers to new products.

In addition, the igus® online configurators also make it easier for you to select the right product for your application. For example, thanks to the e-chains® service life calculator, you can create a guarantee certificate for up to 4 years for your chosen system with just a few entries. We can give this guarantee because we know exactly what our products can do through numerous tests in the igus® laboratory and decades of applications experience.

And even after your system has run its course, we are there for you and take back old energy chains to recycle them in our Chainge® recycling programme. The recycled material flows into our new material igumid® CG LW, which we use to manufacture our energy chains in the E2.1 family since spring 2025, reducing the CO_2 footprint of this series by around 80%. We have also revised this catalogue in the spirit of sustainability: focus on standard series and technical information, less marketing, details and special solutions outsourced to our website. The result: over 700 pages saved.

We are looking forward to your feedback!

Michael Blaß
CEO e-chain systems®

► **www.igus.eu/e-chain-catalogue-feedback**



It’s our job.

e-chain systems®

Moving energy made easy
igus® e-chains® are reliably used in hundreds of thousands of applications worldwide - from beverage vending machines to steel mills. They have a modular design and are therefore easy to assemble. They are resistant to different media and are ideal for very small spaces as well as for large, heavy cables and hoses. e-chain systems® are indispensable for modern machines, they ensure the supply of energy, data and signals while in constant motion. igus® has been developing, producing and testing polymer e-chains® since 1971. Our expert knowledge is being continuously refined with the help of our customers to constantly improve our product range.

- Many options in terms of movement and length
- High requirements regarding service life where dynamic loads are very high
- For different environments and applications
- Innovative products that can be assembled very quickly
- Large range of products - find the right solution quickly
- System quotes, including made-to-measure harnessing and “turnkey” installation

► **www.igus.eu/the-chain**

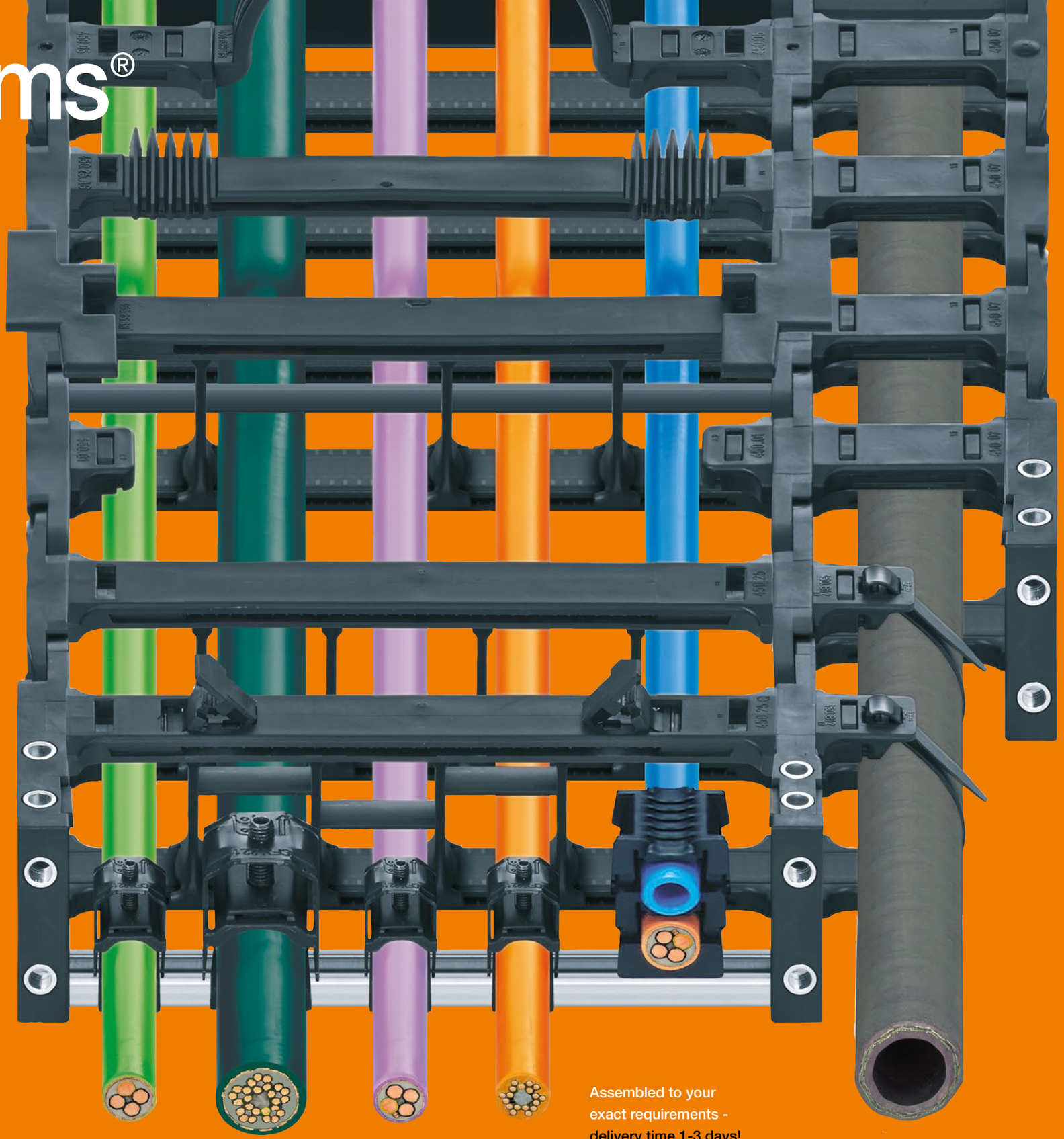

Assembled to your exact requirements - delivery time 1-3 days!

Tested.

We operate the largest test laboratory in the industry for you - 10 billion test cycles per year in the laboratory for energy chains and chainflex® cables.

Are e-chains® correct for your application? You don't need to guess. Instead, we operate the largest test laboratory in the industry in an area of 4,000m². We test energy chain systems under the realistic conditions. 180 test stations perform over ten billion test cycles with e-chains® and chainflex® cables every year.

We use the results to develop the optimum energy supply system for any application and to make reliable statements about service life. Regardless of whether your application is in the dusty desert or freezing cold. For this reason, we also offer you an above-average guarantee of up to 4 years - as the only supplier worldwide to do so.

*As of 01/2025



IPA-certified in-house cleanroom laboratory



Cable test, more than 80 million strokes



Bend factor test, 76 million strokes at 9.4 x d



Outdoor test facility for travel lengths of up to 400m



Swarf test, 100% swarf-resistant



Test for torsion and twisting



4,000m² igus® laboratory. More than 15,000 tests, about 4,000 of them for e-chains® and chainflex® cables.

► www.igus.eu/testlab

Guaranteed.

Up to 4 years e-chain® guarantee* - use the service life calculator to determine the guaranteed service life and receive your individual guarantee certificate online

The service life of e-chains® often exceeds 10 years. The new guarantee service gives customers the confidence of being able to design their individual application right and always choose the most cost-effective e-chain® that works reliably.

- Up to 4 years guarantee* on all e-chain® components that have failed due to wear and tear
- Generate individual guarantee certificate via the igus® e-chain® service life calculator and have it sent by e-mail
- Free replacement parts for e-chains® that fail due to wear and tear
- The chainflex® cables used in e-chains® also come with a guarantee* of up to 4 years



▶ Quickly harnessed ...

▶ ... quickly delivered ...

▶ ... with up to 4 years guarantee*!



Guarantee information*
The igus® e-chain® guarantee of up to 4 years applies to the number of double strokes according to the online service life calculator (www.igus.eu/info/energy-chains-service-life-calculator).
The guarantee conditions available at
▶ www.igus.eu/e-chain-guarantee apply.

The igus® chainflex® guarantee of up to 4 years is valid for the number of double strokes calculated according to the online service life calculator (www.igus.eu/ChainflexTools/ServiceLifeCalculator).
The guarantee conditions available at
▶ www.igus.eu/guarantee apply.

Guarantee igus products 4 YEARS up to 4 years guarantee

▶ www.igus.eu/ECS-service-life

Manufactured.

The igus® factory - investment in better technology and faster delivery times

A few decades ago, it was unthinkable to replace metal with plastic in the production of energy chains. But that is precisely the secret of our success. We have pushed the boundaries of plastic technology a lot further. And at the same time, costs are being reduced all the time. 188,000 customers worldwide trust **motion plastics®**. We will continue on our growth trend and, with all innovations and investments, we will focus more than ever on sophisticated yet simple solutions.

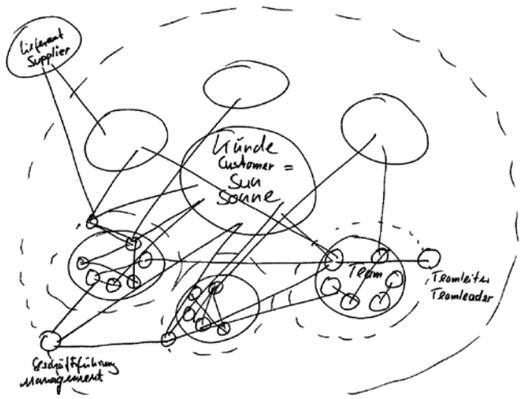

“For us, customers have the same significance as the sun to life on earth. The sun gives light, warmth and energy; our customers give us ideas, work and money.”

► www.igus.eu/quality



Material preparation



Injection moulding



Warehouse



Assembly factory



Toolmaking



Open offices



Configured online.

Digital assistance to save time
From a concept to configuration and service life simulation. Check price and delivery time online. Download CAD file of your individual configuration? All of this is possible at no cost and without registration. Find your product and information with the tool of your choice.

All digital tools for energy chains at a glance

- Energy chain configurator
- Service life calculator
- Configurator for robotic equipment
- e-skin® flat configurator
- e-skin® interior separation configurator
- Spring cable drums product finder
- Interior separation configurator
- 3D CAD models

► www.igus.eu/configurator

FIND AND ORDER DIRECTLY/SUBMIT ENQUIRY

with igus® product filters and the online shop

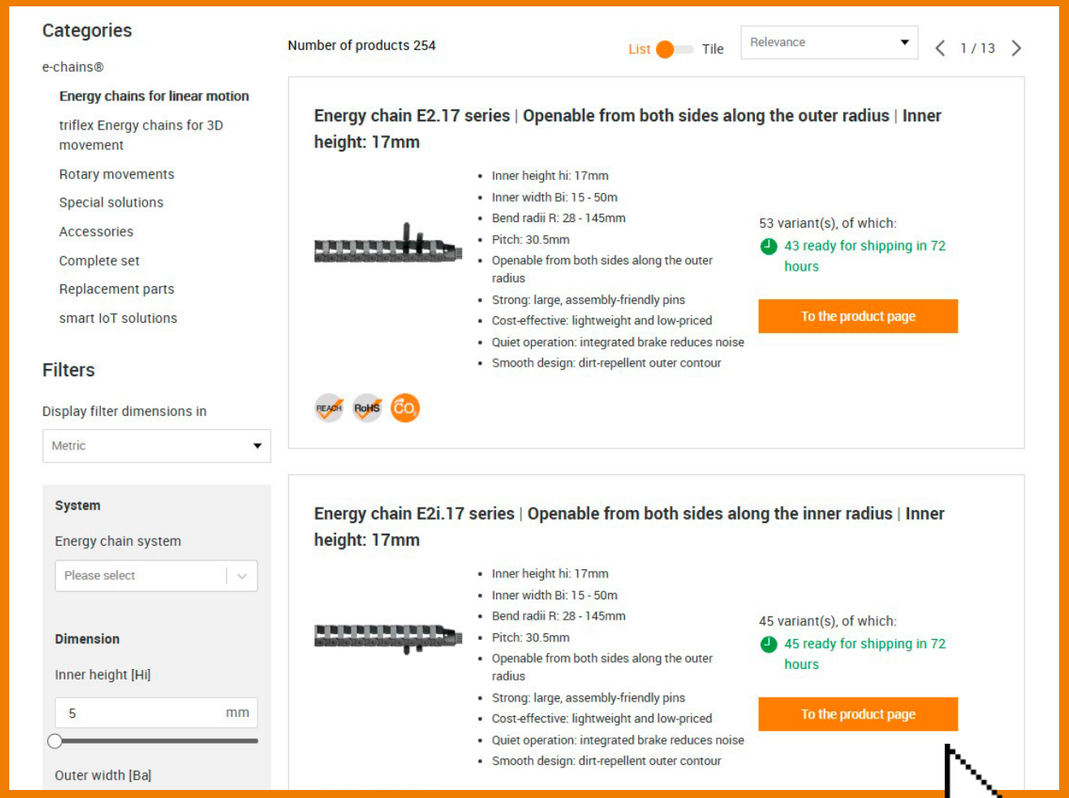

CALCULATE & CONFIGURE ONLINE

with igus® e-chains® expert systems

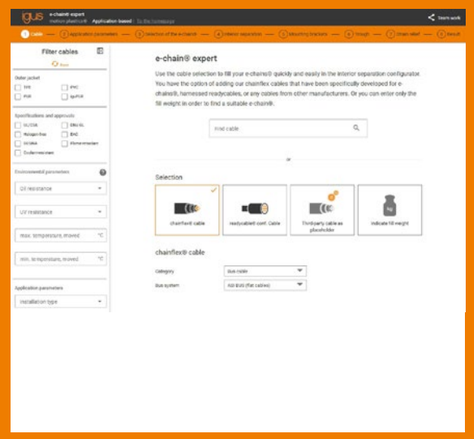

CAD DOWNLOAD

with igus® configurators and CAD

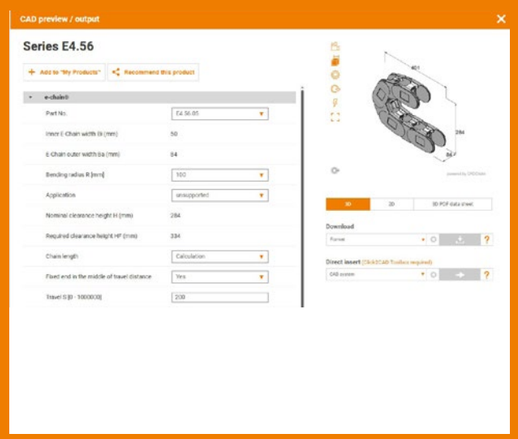

CALCULATE THE GUARANTEED SERVICE LIFE ONLINE

with the e-chains® service life calculator

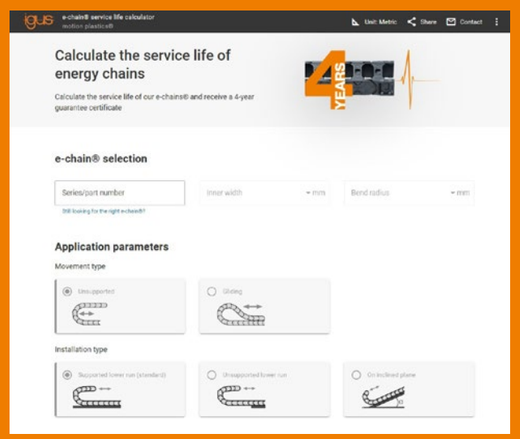

Harnessed.

readychain® - ready-to-install e-chain systems®: reduce assembly and harnessing time by 95%
Ready-made energy supply systems are developed, fitted with connectors and delivered ready to fit to your machine. Customers can dispense with their own storage space for e-chains®, cables and connectors, saving time and space for internal logistics and for assembly and installation of their energy supply system. The ready-made modules reduce process costs for our customers by up to 80% and dramatically increase throughput. Machine downtime is also minimised. To achieve this, we supply the systems worldwide from 12 assembly and logistics centres.

- Harnessing time is reduced by up to 95%
- Reduction in manufacturing costs
- Minimal amount of logistics work - no storage space necessary
- Procurement optimisation - one system, one part number
- Reduce assembly time - less machine downtime
- Installation on the spot - international service with 32 subsidiaries
- Special designs are possible - igus® is developing further components

► **www.igus.eu/readychain**

readychain® premium
Consists of an energy chain equipped with electrical cables, pneumatic and hydraulic hoses and sensor systems including connectors as well as transport and assembly rack.



... readychain®



readychain® basic
Consists of an e-chain® equipped with electrical cables, pneumatic and hydraulic hoses without plug connections.



readychain® standard
Consists of an e-chain® equipped with electrical cables, pneumatic and hydraulic hoses and sensor systems including connectors.



readychain® standard plus
Consists of an e-chain® equipped with electrical cables, pneumatic and hydraulic hoses and sensor systems including connectors as and mounting metalwork.

Fast delivery.

Our supply chain pushes the accelerator for you
We guarantee fast delivery worldwide - with 4,600 employees in Germany and at 30 international subsidiaries as well as offices and support points in more than 80 countries. 97% of the catalogue parts are immediately available. Your order will be ready to ship within 24-48 hours - even sooner if you wish. You can conveniently track the shipment online.

And best of all: there are no surcharges for small quantities, no cutting charges for cables and no packaging costs.

Shipped from 24hrs

No minimum order quantity

7-20 plus Saturday service

Online order tracking

► www.igus.eu/24hrs

24hrs

Single components e.g.

A single e-chain® link, 6m of e-chain®, 3 strain relief elements, etc.

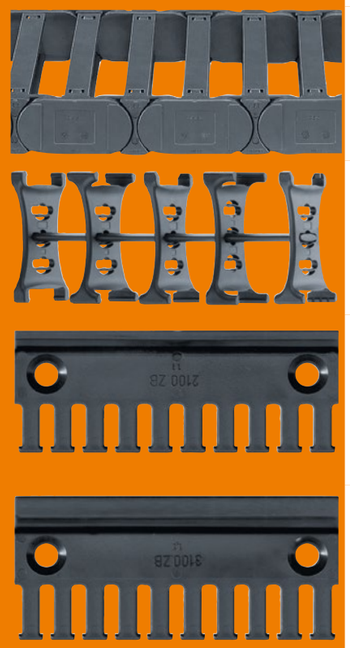

24-72hrs

Customised e-chain systems® e.g.

11.46m of igus® e-chains® with interior separators, mounting brackets and strain relief elements according to your specifications. Also with loose accessories as chainflex® cables, guide troughs, mounting brackets, strain relief and installation materials

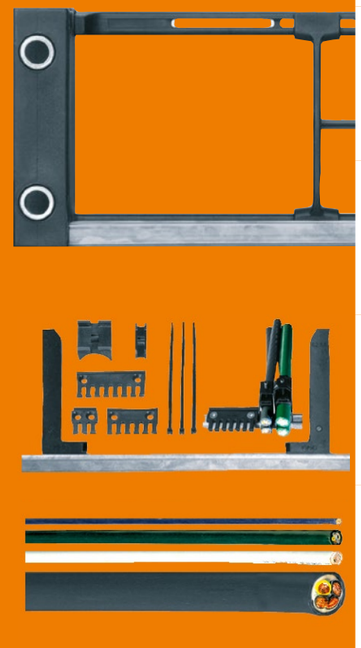

3-5 business days

Harnessed systems, e.g. readychain® basic

Simple, harnessed e-chain systems® including installed cables without connectors, labelled and tail lengths to your specifications

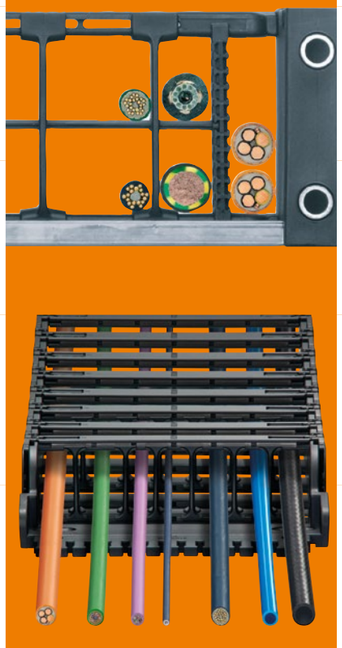

10 business days

readychain® premium

Fully harnessed igus® e-chain system® with cables of all types as well as plug connections, connectors, projections and components according to your specifications



Assembled on site.

Save time and money - installation and maintenance of your e-chain system®

New installation
- Installation of a tailored e-chain system® on-site at your facility or your new plant
- Documentation and planning of the project at your construction site
- Configuration of the system interfaces and consulting by igus® engineering
- Everything from one source - including customised system guarantee

Conversion / Modernisation / Retrofit
- Modernisation and implementation concept for the conversion of existing energy supply systems to e-chain systems®
- Reduction of costs and energy consumption
- Increased service life

Inspection
- Assessment of the technical condition of the your energy supply system
- Determination of the repair and maintenance requirements
- Documentation of the plant condition in the inspection report: deficiencies, risks and optimisation proposals

Maintenance
- Preventive maintenance enables you to proactively recognise and address any damage or issues, thereby extending the service life of your system.
- Adjustments and documentation in the maintenance handbook

Repair / Service
- Prompt, flexible, and professional exchange and service on e-chain systems® and their components

► **www.igus.eu/installation**

Consultation from igus® at your premises ▶ Measurement and project planning ▶ Delivery & customised assembly planning ▶ Installation and conversion service incl. chainge® ▶ Acceptance and commissioning ▶ igus® guarantee ▶ Superwise igus® smart service ▶ Inspection/ maintenance



Works.

Energy supply made easy for every industry - with igus® e-chain systems®
Our task is to supply energy and data to moving power consuming equipment safely and reliably. Such equipment is constantly in motion and has to function reliably in difficult ambient conditions as well as under high levels of stress and at high speeds. e-chain systems® can be used universally in these kinds of application.



For example: machine tools, woodworking equipment, cranes, material handling systems, robots ...



► www.igus.eu/applications



Harnessed energy chains - readychain®



Extremely long travels with rol e-chains® (here 700m)



Reliable cable guidance in agricultural engineering



e-loop® for top drives



Enclosed energy chains for reliable protection against dirt and swarf

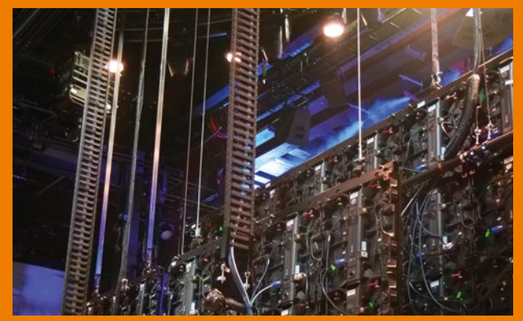

Vertical energy supply systems for theatre and stage technology



igus® e-chain system® on cranes

Recycling.

Let's protect the environment together! We can recycle old energy chains, irrespective of their manufacturer

CO_2 emissions in the industry are driving climate change. Industry must take responsibility to counteract this, and we have therefore launched the **chainge®** recycling program.

Send us your old energy chains instead of simply disposing of them with industrial waste. We will separate the material into its constituent materials and shred it. We use the granulate of igus® energy chains for moulding new products. We place recycled material from competitors' chains over to circular economy exchanges.



Recycling made easy ...

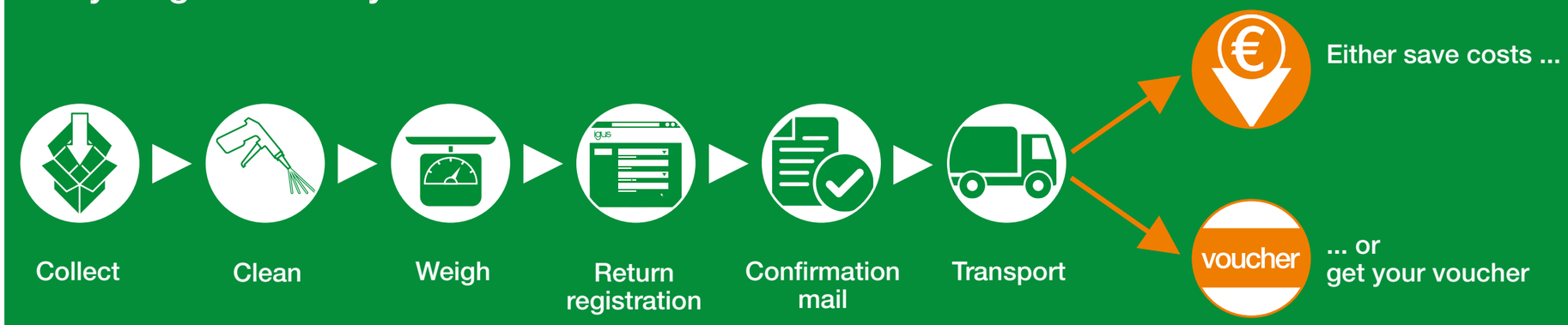

Chainge
engineering plastics recycling

► www.igus.eu/chainge

Selection by product

Continued

For simple applications, easy to fill

Office chain
OCO | "easy“ design



32

Functional energy supply for moving desks with "easy" design.
► From page 82

e-chain® version E
easy chain® | "easy" design



5-48.5

Split crossbar along the outer radius. Some types with multi-chamber design.
► From page 86

e-chain® version Z
easy chain® | "easy" design



9.4-48.5

Split crossbar along the inner radius. Some types with multi-chamber design.
► From page 86

All-rounder e-chains®, micro and mini

e-chains®, one-piece design
E2/E2C.1 micro | Non-openable



5-17

Strong, quiet, for the smallest installation spaces. One-piece design, non-openable.
► From page 110

e-chains®, two-piece design
E2i.1 micro | Openable



10.1-17

For the smallest installation spaces. Lids openable along the inner radius, from both sides.
► From page 110

e-chains®, two-piece design
E2.1 micro | Openable



10.1-17

For the smallest installation spaces. Crossbars openable along the outer radius, from both sides.
► From page 110

All-rounder e-chains®, medium sizes

e-chains®, two-piece design
E2.1i | Openable



21.2-48

Strong all-rounder, easy to open. Lids openable along the inner radius, from both sides.
► From page 132

e-chains®, two-piece design
E2.1 | Openable



21.2-48

Strong all-rounder, easy to open. Crossbars openable along the outer radius, from both sides.
► From page 132

e-chains®, one-piece design
E2C.1 | Non-openable



21.2-38

Strong all-rounder, easy to open. One-piece design, non-openable.
► From page 132

e-tubes, medium sizes

R2.1 e-tubes
R2.1i | Openable



26-48

Cost-effective, strong e-tubes. Lids openable along the inner radius, from both sides.
► From page 158

R2.1 e-tubes
R2.1 | Openable



26-75

Cost-effective, strong e-tubes. Lids openable along the outer radius, from both sides.
► From page 158

E4 - universal modular kit ...

e-chain® with crossbars every link
E4Q | Openable without tools



34-82

Opening and closing without tools. Crossbars removable along the inner and outer radius.
► From page 176

... e-chains® and e-tubes for any application

e-chains® with crossbars every 2nd link
H4Q | Openable without tools



34-82

Opening and closing without tools. Crossbars removable along the inner and outer radius.
► From page 176

e-chain® with crossbars every link
E4Q.L | Openable without tools



64

L variant - opening and closing without tools. Crossbars removable along the inner and outer radius.
► From page 202

e-chains® with crossbars every 2nd link
H4Q.L | Openable without tools



64

L variant - opening and closing without tools. Crossbars removable along the inner and outer radius.
► From page 202

...

e-chain® with crossbars every link
E4.1 | Openable



21-350

For especially demanding applications. Crossbars removable along the inner and outer radius.
► From page 210

e-chains® with crossbars every 2nd link
H4.1 | Openable



32-80

For almost any application, the standard. Crossbars removable along the inner and outer radius.
► From page 210

e-tubes
R4.1 | Openable



28-108

Fully enclosed design. Lids openable along the outer radius, from one side. Shelves can be removed from the inner radius.
► From page 210

Selection by product

Continued

...

e-chain® with crossbars every link
E4.1L | Openable



31-64

High dynamics, light design, cost-effective. Crossbars openable along the inner and outer radius from both sides.

► From page 270

e-tubes
R4.1L | Openable



31-48

High dynamics, light design, cost-effective. Lids openable along inner and outer radius, from both sides.

► From page 270

e-chain® with crossbars every link
E4/light | Openable



56-112

Low weight and cost-effective. Crossbars removable along the inner and outer radius.

► From page 296

e-chains® and e-tubes - tough, shake-proof and compact

e-tubes
YR | Openable



42-56

Plastic-steel hybrid e-tubes. Lids removable along the inner and outer radius.

► From page 334

HD e-chains®
YEHD | Openable



108-112

Heavy-duty plastic-steel hybrid e-chains®. Crossbars removable along the inner and outer radius.

► From page 334

HD e-tubes
YRHD | Openable



108

Heavy-duty plastic-steel hybrid e-tubes. Lids removable along the inner and outer radius.

► From page 334

... or as openable corrugated tubes

e-skin® cleanroom corrugated tube
SK | Openable, two-piece design



28-38

e-skin® SK for longer unsupported lengths. IPA cleanroom Class 1.

► From page 362

e-skin® cleanroom corrugated tube
SKS soft | Openable, two-piece design



20-38

e-skin® soft SKS with more elastic material and lower installation height. IPA cleanroom Class 1.

► From page 362

Cleanroom ...

e-chain® with crossbars every link
C6 | Openable

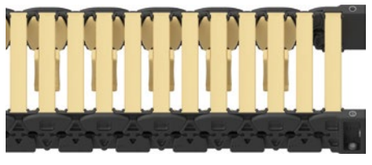

29-53

Highest cleanroom suitability. Crossbars removable along the inner and outer radius.

► From page 368

...

e-chains® with crossbars every 2nd link
E4/light | Openable



56-86

Low weight and cost-effective. Crossbars removable along the inner and outer radius.

► From page 296

e-tubes
E4/light | Openable



56-108

Lids openable along the outer radius, from one side. Shelves can be removed from the inner radius.

► From page 296

Plastic-steel hybrid ...

e-chains®
YE | Openable



42-56

Plastic-steel hybrid e-chains®. Crossbars removable along the inner and outer radius.

► From page 334

Cleanroom energy supply systems as connectable individual profiles ...

e-skin® flat profiles
SKF.C | Fully enclosed

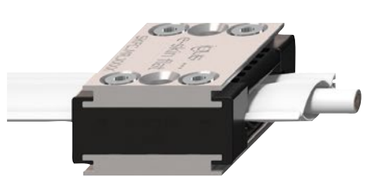

10-15

With closed cable chambers. Optional support e-chain® available. IPA cleanroom Class 1.

► From page 354

e-skin® flat profiles
SKF.O | Openable

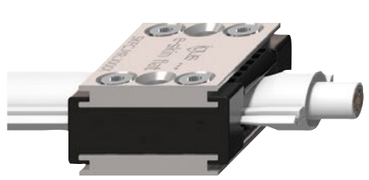

10-15

Openable with a special locking mechanism. IPA cleanroom Class 1.

► From page 354

Support e-chain®
SKF.S | For SKF12C / SKF15C



8-12

Support e-chain® for unsupported length, can be combined with SKF12C / SKF15C.

► From page 354

... e-chains® and e-tubes - low noise, low vibration and high dynamics

e-chains®
E6 | Openable



29-80

Low noise - 37dB(A), low vibration, cleanroom suitable. Crossbars removable along the inner and outer radius.

► From page 382

e-tubes
R6 | Openable



28-52

Low noise - 37dB(A), low vibration, cleanroom suitable. Lids removable along the inner and outer radius.

► From page 382

e-chains®
E3 | Openable, three-piece design



10-22

Dynamic for cleanrooms. Crossbars on a strip, zip-open along the outer radius.

► From page 420

Selection by product

Continued

Solutions for circular movement and multi-axis motion

Energy chains for spiral movements twisterband | Rotary movements in the smallest space

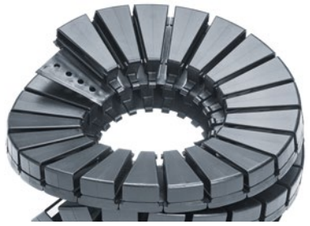

9-22

Rotary movement in the most confined space. Openable with film hinge or openable "easy" design.

► From page 434

Energy chains for spiral movements twisterband HD | Fits tightly around the rotary axis, strong



11-30

e-chain® links with strong pin and hook connection, openable.

► From page 438

Spring-driven cable drum with no slip ring e-spool® flex light 2.0 | SPFL



≤15

Continuous panel feed for integration into existing customer structures.

► From page 444

...

Spring-driven cable drum with no slip ring e-spool® for manual operation | SPC1



≤5

Cable or hose pulled out by hand. With e-chain® and 1 twisterband.

► From page 452

Spring-driven cable drum with no slip ring e-spool® standard / HD | SP1

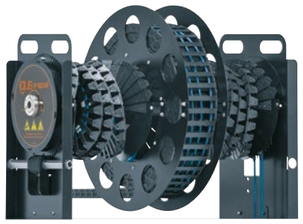

≤14

Flexible use. With e-chain® and 1 or 2 twisterbands.

► From page 454

Spring-driven cable drum with no slip ring e-spool® power



≤25

Motor-driven, for long extension lengths. Product upon request.

► From page 458

e-chains® for long travels

Self-guiding, two-piece design autoglide 5 | E2/000...AG5



25-35

For self-guiding E2/000 e-chains®. Energy and data transmission installed in just 1 hour.

► From page 470

Self-guiding, four-piece design autoglide 5 | E4.1...AG



32-42

For self-guiding E4.1 e-chains®. Energy and data transmission installed in just 1 hour.

► From page 470

Heavy-duty rol e-chain® P4HD | Openable



56

Heavy-duty rol e-chain® for maximum service life with optimised design. Crossbars removable.

► From page 476

...

Spring-driven cable drum with no slip ring e-spool® flex 2.0 | SPF



≤15

Uninterrupted cable guidance.

► From page 446

Spring-driven cable drum with no slip ring e-spool® flex mini | SPF



≤3

For small installation spaces.

► From page 448

Spring-driven cable drum with no slip ring e-spool® compact | SP1 / SPHD1



≤4

Space-saving, spring-driven. With e-chain® and 1 twisterband.

► From page 450

Solutions for vertical motion

Vertical guidance guidelok slimline | P / P.S



50

P version: safe vertical guidance. P.S version: for narrow lanes.

► From page 460

Vertical guidance, with crossbars every link e-loop® | Version D / TD

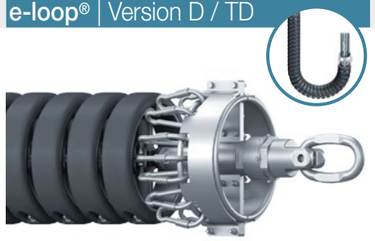

150-360

Dynamic - for all moving applications. e-loop® as an alternative to the service loop.

► From page 464

Vertical guidance, with crossbars every 2nd link e-loop® | Version S

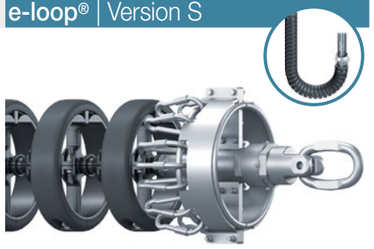

150-230

Static - for purely static cable guidance. e-loop® as an alternative to the service loop.

► From page 464

Guide troughs for long travels ...

For general applications Aluminium SuperTrough | Basic



77-236

With standard installation sets for general mechanical engineering. Very simple, modular assembly.

► From page 480

For extreme loads Steel guide troughs



70-480

Very strong and tough for heavy-duty applications, large selection.

► From page 504

Energy supply for cranes girders and indoor cranes guidefast | GF91.30/GF91.31



42.5-120

Economical energy supply for crane girders and indoor cranes. With or without glide bars.

► From page 528

Selection by product

...

For jib cranes, bolted installation
guidelok swing | GLO.S

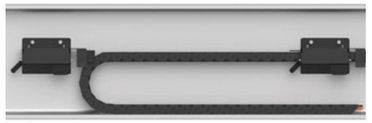

25-38

For jib cranes with a moving lower run and travels up to 10m.

► From page 532

For jib cranes, self-adhesive installation
guidelok swing | GLO.S...G

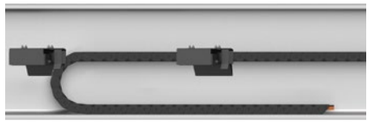

25

Self-adhesive installation - for jib cranes with a moving lower run and travels up to 10m.

► From page 532

Upper run guide
guidelok horizontal | 907.645/837



50-600

Upper run guide for long travels, unsupported in swarf areas, up to 50m possible.

► From page 536

...

For C-profiles
Clamps | CFXL

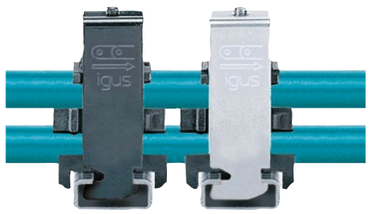

Clamps with wide base for increased holding force. Suitable for C-profile 92.52., C-profile always assembled in front of the e-chain®. Cannot be integrated into KMA.

► From page 556

Installation profile
C-profile | 92.42 | 92.52

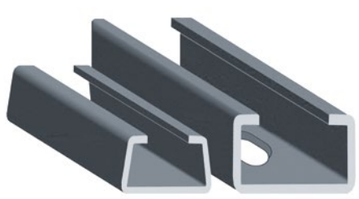

C-profile for standard applications (Part No. 92.42) and for increased holding force (Part No. 92.52) for heavy-duty applications.

► From page 561

For C-profiles
Multi-clamps | CFX/CFXL



More modular options of the proven chainfix clamps. For infinite assembly options.

► From page 562

...

For C-profiles / openable crossbars / fixed crossbars
Tiewrap plates | Options

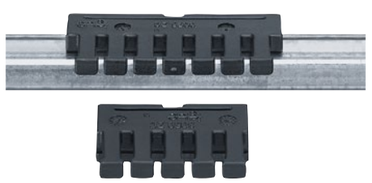

4 options available: **1.** With clip-on connection to C-profile **2.** For top-hat (DIN) rail 15. **3.** For fixed crossbars. **4.** For openable crossbars.

► From page 572

For e-chain® links
Strain relief separators



Separator with integrated strain relief teeth. For easy strain relief either at the first or last e-chain® link with cable tiewraps.

► From page 574

For C-profiles / top-hat (DIN) rail 15
CFV | Strain relief elements



Stepped strain relief elements with tiewrap teeth. For a strain relief for use outside of the e-chain® section.

► From page 576

Support tray for unsupported applications

Easy support of the lower run
Steel support tray | S9.010/ S9.020



80-306

One-piece steel support tray for easy support of the lower run.

► From page 540

Easy support of the lower run
Aluminium support tray | 9AT.35.SL



80-427

Flexible construction kit to support the lower run. Width adjustment using installation sets with C-profiles.

► From page 544

chainfix strain relief ...

For C-profiles
Clamps | CFX



Standard clamps with standard base. Suitable for C-profile 92.42., can be integrated into KMA with C-profile option.

► From page 556

...

For C-profiles
Clamps for pneumatic hoses | CFX/CFXL



With these options, the chainfix clamps can be specifically used for pneumatic hoses. Strain relief of hoses without crushing or damage.

► From page 564

Stackable in C-profile
Multi-tiewrap plates | Series 3000



Stackable, space-saving, flexible. Flexible modular system with stackable levels. For all mounting brackets with C-profile.

► From page 566

For C-profiles / Mounting brackets
Tiewrap plates | Universal



Tiewrap plates as individual parts. Screwed on KMA with C-profile or can be clipped onto some mounting brackets. Series 2000 and 3000 available as individual components.

► From page 570

Selection by inner height



hi [mm]	Series	Product	Page
5 - 11mm			
5	03	E2 micro	112
5	E03	easy chain®	88
7	04	E2 micro	114
7	E04	easy chain®	90
9	TB12.23.9	twisterband	436
9.4	E045 / Z045	easy chain®	92
10	E2C.10L	E2.1 micro	118
10	E3.10	E3	422
10	SKF10C / SKF10O	e-skin® flat	356
10.1	E2.10 / E2i.10	E2.1 micro	120
10.3	045	E2 micro	116
10.5	Z06	easy chain®	94
10.6	E2C.10	E2.1 micro	120
10.7	E06	easy chain®	94
11 - 16mm			
11	TBHD12.24.11	twisterband HD	440
11.3	E065 / Z065	easy chain®	96
12	SKF12C / SKF12O	e-skin® flat	356
12	TB20.44.12	twisterband	436
12	TBHD20.44.12	twisterband HD	440
14.4	E2.15 / E2i.15	E2.1 micro	124
14.6	E08	easy chain®	98
14.7	Z08	easy chain®	98
14.9	E2C.15	E2.1 micro	124
15	E3.15	E3	426
15	SKF15C / SKF15O	e-skin® flat	356
17 - 23mm			
17	E2.17 / E2C.17 / E2i.17	E2.1 micro	128
18	TB20.44.18	twisterband	436
18	TBHD20.44.18	twisterband HD	440
19	E14 / Z14	easy chain®	100
20	SKS20	e-skin® SKS	364
21	E4.21	E4.1	212
21.2	E2.21 / E2C.21 / E2i.21	E2.1	134
22	E3.22	E3	430
22	TB29.27.22	twisterband	436
22	TB30.75.22	twisterband	436
22	TBHD30.75.22	twisterband HD	440
24 - 31mm			
24	SKS24	e-skin® SKS	364
24.3	E200 / Z200	easy chain®	102
26	E2.26 / E2C.26 / E2i.26	E2.1	140
26	R2.26 / R2i.26	R2.1	160
28	E4.28 / R4.28	E4.1	218
28	R6.29	R6	384
28	SK28 / SKS28	e-skin® SK / SKS	364
29	C6.29	C6	370
29	E6.29	E6	384
30	TBHD42.135.30	twisterband HD	440
31	E4.31L / R4.31L	E4.1L	272

hi [mm]	Series	Product	Page
32 - 52mm			
32	E16 / Z16	easy chain®	104
32	E4.32 / H4.32 / R4.32	E4.1	224
32	OCO.32	OCO	82
34	E4Q.34 / H4Q.34	E4Q	178
35	E6.35	E6	388
35	GLSL.P	guidelok slimline	462
35	GLSL.P.S	guidelok slimline	463
36.5	E26 / Z26	easy chain®	106
38	C6.38	C6	374
38	E2.38 / E2C.38 / E2i.38	E2.1	146
38	E4.38L / R4.38L	E4.1L	278
38	SK40 / SKS40	e-skin® SK / SKS	364
40	E6.40 / R6.40	E6 / R6	392
40	R2.40 / R2i.40	R2.1	164
42	E4.42 / H4.42 / R4.42	E4.1	230
42	YE.42 / YR.42	YE / YR	336
44	E4Q.44 / H4Q.44	E4Q	184
48	E2.48 / E2i.48	E2.1	152
48	E4.48L / R4.48L	E4.1L	284
48	R2.48 / R2i.48	R2.1	168
48.5	E300 / Z300	easy chain®	108
52	E6.52 / R6.52	E6 / R6	398
56 - 86mm			
53	C6.53	C6	378
56	14040 / 14140 / R18840	E4/light	298
56	E4.56 / H4.56 / R4.56	E4.1	236
56	P4HD.56R	P4HD	478
56	YE.56 / YR.56	YE / YR	342
58	E4Q.58 / H4Q.58	E4Q	190
62	14240 / 14340	E4/light	304
62	E6.62	E6	402
64	E4.64L	E4.1L	290
64	E4Q.64L / H4Q.64L	E4Q.L	204
70	14550 / 14650 / R19050	E4/light	310
75	R2.75	R2.1	172
80	15050 / 15150 / R19850	E4/light	316
80	E4.80 / H4.80 / R4.80	E4.1	242
80	E6.80	E6	414
80	E6.80L	E6	408
82	E4Q.82 / H4Q.82	E4Q	196
86	15250 / 15350	E4/light	322
>108mm			
108	R1608	E4/light	328
108	R4.112	E4.1	248
108	YEHD.108 / YRHD.108	YEHD / YRHD	348
112	1640	E4/light	328
112	E4.112	E4.1	248
112	YEHD.112	YEHD	348
162	E4.162	E4.1	254
200	800	E4.1	258
204	840	E4.1	262
350	E4.350	E4.1	266

Selection by series

Series	Product	Page
03	E2 micro	112
04	E2 micro	114
045	E2 micro	116
800	E4.1	258
840	E4.1	262
1640	E4/light	328
14040	E4/light	298
14140	E4/light	298
14240	E4/light	304
14340	E4/light	304
14550	E4/light	310
14650	E4/light	310
15050	E4/light	316
15150	E4/light	316
15250	E4/light	322
15350	E4/light	322
2400AG5	autoglide 5	472
2600AG5	autoglide 5	473
Aluminium SuperTrough	Guide trough	480
C6.29	C6	370
C6.38	C6	374
C6.53	C6	378
CFX	chainfix	558
CFXL	chainfix	559
Clamps	chainfix	556
Clamps for pneumatic hoses	chainfix	564
e-spool® power	e-spool®	458
E03	easy chain®	88
E04	easy chain®	90
E045 /.2 /.3	easy chain®	92
E06	easy chain®	94
E065 /.2 /.3 /.4	easy chain®	96
E08	easy chain®	98
E14	easy chain®	100
E16	easy chain®	104
E2.10	E2 micro	120
E2.15	E2 micro	124
E2.17	E2 micro	128
E2.21	E2.1	134
E2.26	E2.1	140
E2.38	E2.1	146
E2.48	E2.1	152
E200 /.2	easy chain®	102
E26 /.2 /.3	easy chain®	106
E2C.10	E2 micro	120
E2C.10L	E2 micro	118
E2C.15	E2 micro	124
E2C.17	E2 micro	128
E2C.21	E2.1	134
E2C.26	E2.1	140
E2C.38	E2.1	146

Series	Product	Page
E2i.10	E2 micro	120
E2i.15	E2 micro	124
E2i.17	E2 micro	128
E2i.21	E2.1	134
E2i.26	E2.1	140
E2i.38	E2.1	146
E2i.48	E2.1	152
E3.10	E3	422
E3.15	E3	426
E3.22	E3	430
E300 /.2 /.3	easy chain®	104
E4.112	E4.1	248
E4.162	E4.1	254
E4.21	E4.1	212
E4.28	E4.1	218
E4.31L	E4.1L	272
E4.32	E4.1	224
E4.32.AG5	autoglide 5	474
E4.350	E4.1	266
E4.38L	E4.1L	278
E4.42	E4.1	230
E4.42.AG5	autoglide 5	475
E4.48L	E4.1L	284
E4.56	E4.1	236
E4.64L	E4.1L	290
E4.80	E4.1	242
E4Q.34	E4Q	178
E4Q.44	E4Q	184
E4Q.58	E4Q	190
E4Q.64L	E4Q.L	204
E4Q.82	E4Q	196
E6.29	E6	384
E6.35	E6	388
E6.40	E6	392
E6.52	E6	398
E6.62	E6	402
E6.80	E6	414
E6.80L	E6	408
ELP.220	e-loop®	466
ELP.300	e-loop®	467
ELP.430	e-loop®	469
ELP.TD.300	e-loop®	468
GLO.S.E2i.21.025.1.	guidelok swing	534
GLO.S.E2i.21.025.1.G	guidelok swing	535
GLO.S.E2i.21.038.1	guidelok swing	534
GLSL.P	guidelok slimline	462
GLSL.P.S	guidelok slimline	463
guidefast	guidefast	528
guidelok horizontal	guidelok	536
H4.32	H4.1	224
H4.42	H4.1	230

Series	Product	Page
H4.56	H4.1	236
H4.80	H4.1	242
H4Q.34	E4Q	178
H4Q.44	E4Q	184
H4Q.58	E4Q	190
H4Q.64L	E4Q.L	204
H4Q.82	E4Q	196
Honeycomb strain relief	chainfix	572
OCO.32	OCO	82
P4HD.56R	P4HD	478
R1608	E4/light e-tube	328
R18840	E4/light e-tube	298
R19050	E4/light e-tube	310
R19850	E4/light e-tube	316
R2.26	R2.1	160
R2.40	R2.1	164
R2.48	R2.1	168
R2.75	R2.1	172
R2i.26	R2.1	160
R2i.40	R2.1	164
R2i.48	R2.1	168
R4.112	R4.1 e-tube	248
R4.28	R4.1 e-tube	218
R4.31L	R4.1L e-tube	272
R4.32	R4.1 e-tube	224
R4.38L	R4.1L e-tube	278
R4.42	R4.1 e-tube	230
R4.48L	R4.1L e-tube	284
R4.56	R4.1 e-tube	236
R4.80	R4.1 e-tube	242
R6.29	R6 e-tube	384
R6.40	R6 e-tube	392
R6.52	R6 e-tube	
SK28	e-skin® SK	364
SK40	e-skin® SK	364
SKF.S.08	e-skin® flat	357
SKF.S.10	e-skin® flat	357
SKF10C	e-skin® flat	356
SKF10O	e-skin® flat	356
SKF12C	e-skin® flat	356
SKF12O	e-skin® flat	356
SKF15C	e-skin® flat	356
SKF15O	e-skin® flat	356
SKS20	e-skin® SKS	364
SKS24	e-skin® SKS	364
SKS28	e-skin® SKS	364
SKS40	e-skin® SKS	364
SP1.240	e-spool® compact	450
SP1.400	e-spool® compact	450
SP1.600	e-spool®	455
SP1.700	e-spool®	455

Series	Product	Page
SP1.850	e-spool®	455
SP2.600	e-spool®	455
SP2.700	e-spool®	455
SP2.850	e-spool®	455
SPC1.300	e-spool®	452
SPF.120	e-spool® flex 2.0 mini	448
SPF.250	e-spool® flex 2.0	446
SPFL.120	e-spool® flex light 2.0	444
SPFL.250	e-spool® flex light 2.0	444
SPHD1.400	e-spool® compact	450
SPHD1.600	e-spool® HD	456
SPHD1.700	e-spool® HD	456
SPHD1.850	e-spool® HD	456
SPHD2.600	e-spool® HD	456
SPHD2.700	e-spool® HD	456
SPHD2.850	e-spool® HD	456
Steel guide trough	Guide trough	504
Strain relief	chainfix	548
Strain relief separator	chainfix	574
Support tray, aluminium	Guide trough	544
Support tray, steel	Guide trough	540
TB12.23.9	twisterband	436
TB20.44.12	twisterband	436
TB20.44.18	twisterband	436
TB29.27.22	twisterband	436
TB30.75.22	twisterband	436
TBHD12.24.11	twisterband HD	440
TBHD20.44.12	twisterband HD	440
TBHD20.44.18	twisterband HD	440
TBHD30.75.22	twisterband HD	440
TBHD42.135.30	twisterband HD	440
Tiewrap plates	chainfix	566
YE.42	YE	336
YE.56	YE	342
YEHD.108	YEHD	348
YEHD.112	YEHD	348
YR.42	YR	336
YR.56	YR	342
YRHD.108	YRHD	348
Z045 /.2	easy chain®	92
Z06	easy chain®	94
Z065.3	easy chain®	96
Z08	easy chain®	98
Z14	easy chain®	100
Z16	easy chain®	104
Z200 /.2	easy chain®	102
Z26 /.2 /.3	easy chain®	106
Z300 /.2 /.3	easy chain®	104

Designing with igus®

Technical design, installation types, applications

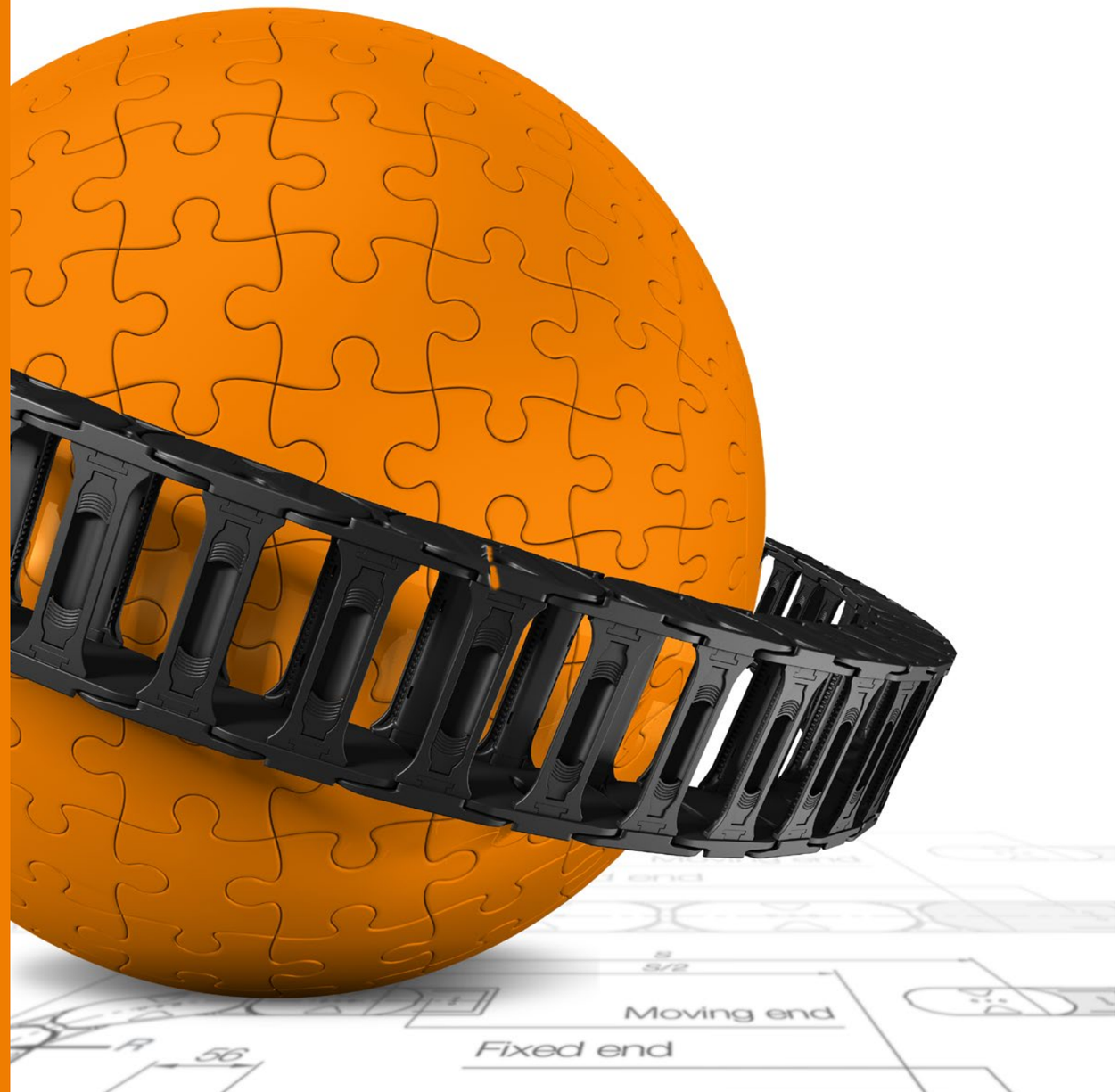

Contents | Page

Designing

Explanation	38
Application icons	39
Selection guide	40
Distribution rules	42
chainfix strain relief	44
Length calculation	46
Installation types overview	47

Installation types

Unsupported	48
Unsupported | FL_U and FL_P	54
Unsupported | Noise-optimised	55
Gliding	56
Vertical hanging	60
Vertical standing	62
Zig-zag	63
Side mounted unsupported	64
Side mounted gliding	65
Circular movement | *RBR*	66
Special solutions | Circular movements	68
Special solutions | Special movement types	69

Materials

Overview	70
Material properties	72
Special solutions and colours	73
Chemical resistance	74

Technical environment

Special environments	75
ESD	76
ESD and ATEX	77
Cleanroom	78
Dry room	80

Test certificates, seals of approval and memberships	81

Designing | Explanation

Short cuts and description

ΔM	Deviation of the centre point	[mm]
a	Acceleration	[m/s²]
AR	Outer radius, e-chain® (twisterchain)	[mm]
Ba	Outer e-chain® width	[mm]
Bi	Inner e-chain® width	[mm]
B_{Ra}	Guide trough outer width	[mm]
B_{Ri}	Guide trough inner width	[mm]
D	Over length e-chain® radius in final position	[mm]
D_2	Over length for long travels gliding	[mm]
FL_B	Unsupported with permitted sag	[m]
FL_G	Unsupported straight length	[m]
FL_P	Inclined unsupported length	[m]
FL_U	Unsupported lower run	[m]
FZ_{max}	Maximum fill weight	[kg/m]
H	Nominal clearance height	[mm]
H_2	Clearance height with lowered moving end	[mm]
ha	Outer e-chain® height	[mm]
H_F	Required clearance height	[mm]
hi	Inner e-chain® height	[mm]
H_{Ra}	Outer trough height	[mm]
H_{Ri}	Inner trough height	[mm]
IR	Inner radius, e-chain® (twisterchain)	[mm]
K	Add-on for bend radius (K is taken from the data tables of the individual series)	[mm]
K_2	Add-on for bend radius if the mounting point is lowered (for long travels)	[mm]
L_K	e-chain® length	[mm]
n	Number of links	[1]
n_{Mon}	Number of installation sets (left/right)	[1]
n_{Ri}	Number of trough sets (left/right)	[1]
R	Bend radius	[mm]
RBR	Reverse Bend Radius	[mm]
S	Travel	[mm]
$S/2$	Half length of travel	[mm]
T	e-chains® pitch	[mm]
v	Speed	[m/s]
X_1	Inner machine limit (twisterchain)	[mm]
X_2	Outer radius e-chain®, including clearance (twisterchain)	[mm]
ΔCL	Offset fixed end	[mm]

SFL_B	$2 \times FL_B$	Calculation of maximum travel length, unsupported with sag
SFL_G	$2 \times FL_G$	Calculation of maximum travel length, unsupported straight
B_{Ri}	$\geq Ba + 4$	Minimum guide trough width
H_{Ri}	$2 \times ha$	Minimum guide trough height for gliding applications
K	$\pi \times R + (2 \times T)$	Add-on for bend radius
L_K	$S/2 + \Delta M + K$	e-chain® length, fixed end is outside the centre of travel (FL_G, FL_B and ΔM)
L_K	$S/2 + K$ [m]	e-chain® length for long travels, fixed end in the centre of travel
L_K	$S/2 + K_2$ [m]	e-chain® length for long travels, fixed end in the centre of travel*

*Does not apply to circular movements and most long travels

Designing | Application icons

Accessibility of e-chains® and e-tubes


"easy" design - simply press cables in


One-piece, non-openable


Crossbars/lids openable along the inner and outer radius from both sides


Zipper - zip-open along the outer radius


Crossbars openable from both sides along the outer radius


Crossbars removable along the inner and outer radius


Openable along the inner radius from one side


Crossbars openable from both sides along the inner radius


Openable from both sides - lids openable along the outer radius, from one side


Openable along the outer radius, from one side


Lids removable along the outer radius


Chain links with 2 or 4-chamber, openable

Further application icons


Unsupported applications

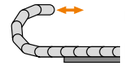
Unsupported lower run FL_U


igus® information


Gliding

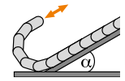
Inclined unsupported length FL_P


igus® order example


Unsupported applications, side-mounted

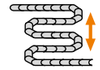
Zig-zag


igus® delivery time


Gliding applications, side-mounted

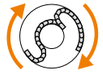
Circular movement *RBR*


igus® order key


Hanging


Circular movement



ESD e-chains®


Standing



Cleanroom solutions

Price index

Low price level


Medium price level


High price level

Designing e-chains®

1

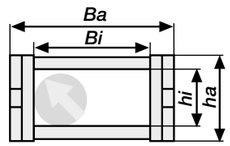

Sizing e-chains®

Determine the size of the e-chain® based on the specified installation space of your machine and/or of the selected filling (such as the number of cables/outer diameter of cable).

2

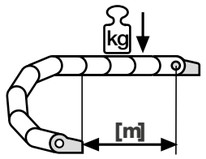

Determine fill weight

Determine the weight of the filling (cables and/or media hoses) in [kg/m] using the chainflex® quick selection or the manufacturer's information.

3

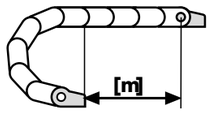

Determine length of travel

Compare the fill weight calculated in (point 2) to the maximum fill weight of the selected e-chain® and check suitability for unsupported application.

4

Unsupported length

The maximum unsupported length initially depends on the fill weight and the e-chain® selected. As a result, we differentiate among three types of unsupported length:

1. Recommended range of application: FL_G
2. Permitted sag: FL_B
3. Critical sag: should never be allowed!

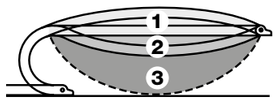

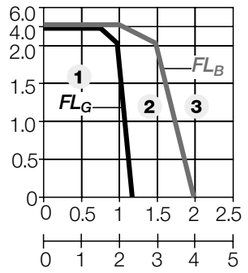

- Twice the value of the unsupported length determines the maximum travel in the unsupported type of operation. For evaluation the weight of the cables to be carried must be known, then an exact evaluation can be made using a diagram on the introductory page of the selected product. You will find the values for FL_G (and FL_B) in the unsupported installation type section as an overview and within every individual series' chapter. They are essential for:
- Finding a suitable e-chain® for your fill weight and travel distance
- Identifying the maximum load for the selected e-chain®

Energy chain configurator

With the energy chain configurator "e-chain® expert", you can define your individual ready-to-connect energy chain system in just a few steps.

- Fast, simple online design
- Price, service life, and delivery time are displayed
- Share current processing status with others

Designing | Selection guide

Designing e-chains®

Yes

An unsupported application is **possible with the selected e-chain®**

5



Opening principle:

The quick finder gives an overview of the possibilities to fill the e-chain®.

6

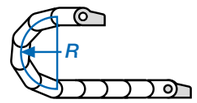

Bend radius *R*:

Determine the possible bend radius *R* [mm] of the e-chain® with respect to the cable diameter.

7



Interior separation options:

Separators, full-width shelves, partial shelves

8

Low	● ○ ○
Medium	● ◐ ○
High	● ● ●

The price index gives you the possibility of making price comparisons of similar sizes within the range.

9

Additional criteria:

... for selection criteria such as pitch, permissible temperatures etc., please refer to our quick finder.

No

An unsupported application is **not possible with the selected e-chain®**

A

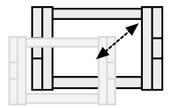

You can choose the **next and stronger** e-chain®, that can be operated unsupported.

or

B

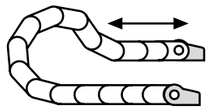

Option:

You can design your application to be gliding.

Part No. e-chain®

□ . □ . □ . □

Alternative e-chain® dimensions:

hi: _____ *Bi*: _____ *ha*: _____ *Ba*:

Fill weight_____ **[kg/m]**

Travel length _____ **[m]**

Do you need help designing an energy chain system or would you like to request a customised quotation? We would be happy to assist you!

Rules for cables and hoses in e-chains®

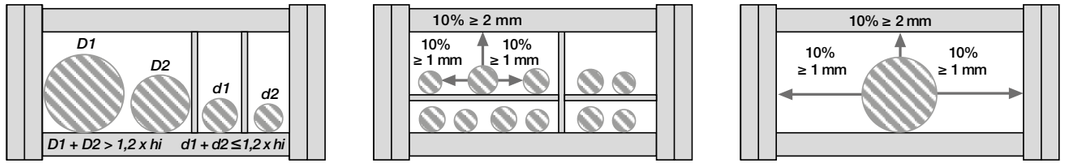

Clearance space for round electrical cables.

General rules

Different types of cables and hoses can be accommodated in an energy chain system. We recommend the optimal separation layout of the cables and hoses in the e-chain®, but you, the customer, are still afforded the final choice. In addition to the quality of the cables used, the arrangement of each conduit within the e-chain® and the space allowed, are important for the service life of the system.

Maximum cable or hose diameter

The maximum cable and/or hose diameter equals the inner height of the selected e-chains® and e-tubes plus minimum clearance. This minimum clearance is 10% for electrical round cables and 20% for hydraulic hoses, for example. An e-chain® is ideally filled if minimum lateral clearance to the next cable or hose has been factored in. Depending on the nature of the cables, the dynamics, and the expected service life, more clearance may be required. In specific cases, filling may be designed with less clearance. Please contact us.
The maximum conduit diameter is specified for each series on its respective chapter.

Cable type	Required clearance space
Round electrical cable	10%
Electrical flat cable	10%
Pneumatic hoses	5 - 10%
Hydraulic hoses	20%
Media hoses	15 - 20 %

Configure with igus® expert systems

Due to the variety of the application parameters, we recommend our online designing tool e-chain® expert of our free personal consultation services.

Distribution rule 1
If *d1 + d2 > 1,2 x inner height*,
no separation between the two cables/ hoses is necessary. Two cables/hoses should never be left unguided on top of one another or be allowed to become tangled.

Distribution rule 2
If *d1 + d2 ≤ 1,2 x inner height*,
a vertical separator or a horizontal shelf must be used to reduce the inner height. This prevents ***d1*** and ***d2*** from crossing-over.

Distribution rules

The cables and hoses must be laid so that they can move freely at all times and so that no tensile force is exerted at the radius of the e-chains®. For high-speed applications and high numbers of load cycles, cables or hoses must not be laid on top of each other without horizontal separation. The standard values for this are: travel speed over 0.5m/s and cycles over 10,000p.a. igus® interior separation offers a safe solution for this situation.

Further guidelines for distribution

The cable or hose weight should be symmetrically distributed along the width of the e-chain®. Cables and hoses with different outer jacket materials must not be allowed to stick together. If necessary, they must be laid separately. All igus® chainflex® cables series can be combined. Generally, the faster and more frequently the e-chain® operates, the more important the exact positioning of the cables and hoses inside the e-chain® becomes.

Bend radius *R*

Ideally, the bend radius of the e-chain® should always be based on the cable with the largest minimum bending radius. This is often also the largest or stiffest cable.

Designing | Distribution rules

Rules for cables and hoses in e-chains®

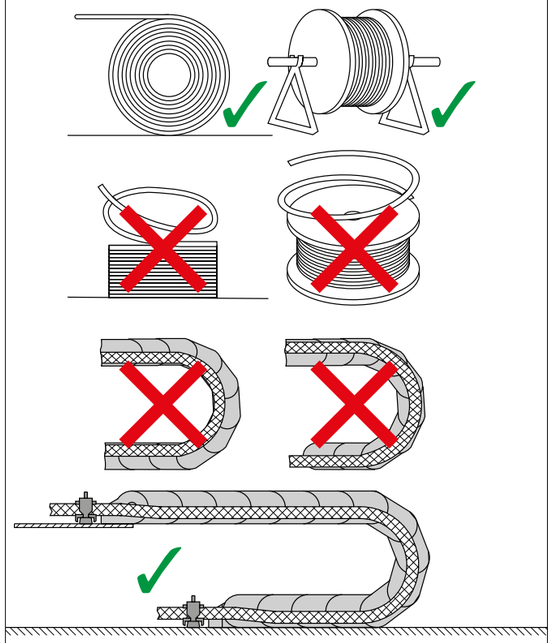

Cables must be able to bend freely. chainflex® cables can be strain-relieved directly at the mounting bracket.

Round electrical cables

For the optimum cable guidance solution, we recommend the use of chainflex® cables from igus®. If third-party products are used, the manufacturer's instructions for continuous operation must be observed.

Pneumatic hoses

The same rules apply as for round cables. If possible, the igus® pneumatic hoses from the chainflex® Air series should be used. If third-party products are used, the manufacturer's instructions for continuous operation must be observed.

Hydraulic hoses

When designing hydraulic hoses into e-chains®, special attention should be paid to the expansion of the hoses when pressurised. We recommend e-chains® with crossbars every link to distribute uniformly the force of the hoses over more crossbars. It is important for selected hoses to be sufficiently flexible. For continuous use, please observe the manufacturer's instructions.

Installation and strain relief for round electrical cables

1) Cables must be laid straight, without any twisting. Cables must not be uncoiled from the top of the spool. igus® chainflex® cables are immediately ready for placement directly into the e-chain®. They need not be disconnected or laid out before installation.
2) The cables must be laid so that each individual cable can move freely from side to side.
3) The cables must be able to move freely along the radius. This must be double-checked if the upper run operates at the cable's maximum bend radius.
4) The division of the e-chains® interior using igus® interior separators or shelves is necessary if several cables and/or hoses with varying diameters are laid out. It is important to prevent cables and hoses from tangling.
5) Cables and hoses with different jacket materials must not be allowed to stick together. If necessary, they should be separated. igus® chainflex® cables can be combined with all others.
6) Round electrical cables must be secured with strain relief at both ends. In exceptional cases, the cables may be fixed with strain relief at the moving end of the e-chain® only. A gap of 10-30 times the cable diameter between the end of the bend segment and the fixed point is recommended for most cables. chainflex® cables can, on the other hand, have strain relief directly at the mounting bracket, as testing has confirmed.
We will be pleased to provide you with recommendations for complete e-chain systems®: bend radii of all cables and hoses, interior separation and service life are then optimised.

● **Pneumatic hoses**
The igus® programme also offers polymer pneumatic hoses called chainflex® Air
● **Hydraulic hoses**
Hydraulic hoses need more space: 20% all-around clearance. **We recommend e-chains® with crossbars every link to distribute the force of the hoses over more crossbars!**

The necessity of strain relief

Strain relief for electrical cables
The strain relief is a mechanical protection mechanism for flexible, electrical cables. Strain relief prevents cables and hoses from moving randomly, thereby protecting them from damage and increasing their service life.

Cable strain relief can consist of standard elements or can be custom-made. Our standard product range of C-profiles and chainfix clamps or simple strain relief using tiewrap plates is suitable for most applications. Ideally, the cables should be strain relieved at both ends of the e-chain®. (In a few instances, strain relief at the moving end of the e-chain® is sufficient - please consult igus® for these cases).

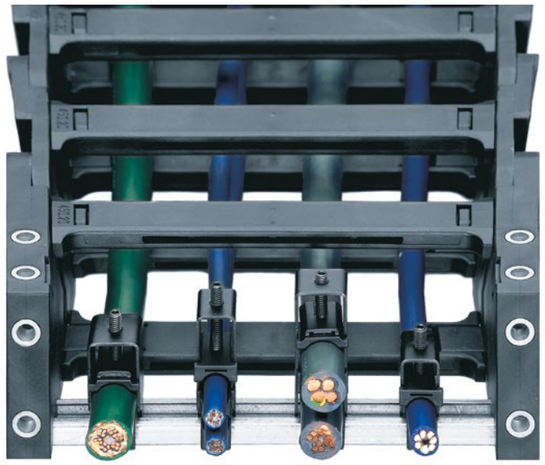

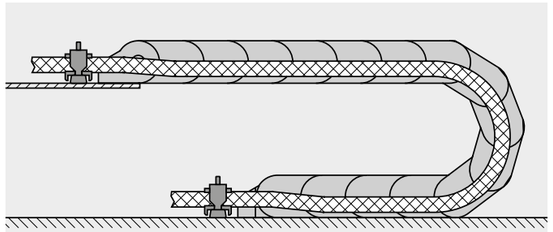

chainflex® cables can be directly strain-relieved in the mounting bracket (minimum gap to the last rotating e-chain® link is not necessary).

Minimum gap between the strain relief and the beginning of the bend radius
Tests show strain relief located at the last bend point of the e-chain® has no influence over the durability of igus® chainflex® cables. Strain relief can be integrated onto the mounting bracket. Options, i.e. chainfix clamp or tiewrap plate, are offered by igus® for almost all e-chains®.

Hydraulic hoses are attached at the moving end with CFX clamps. Special attention should be paid to the expansion of the hoses when pressurised.

Designing | chainfix strain relief

Standard solutions

CFX clamps - fitted quickly and securely
Clamps are assembled as standard on a C-rail, which is either integrated or screwed in front of the KMA mounting bracket. chainfix clamps are the safest strain relief solution.
More information ▶ From page 556.

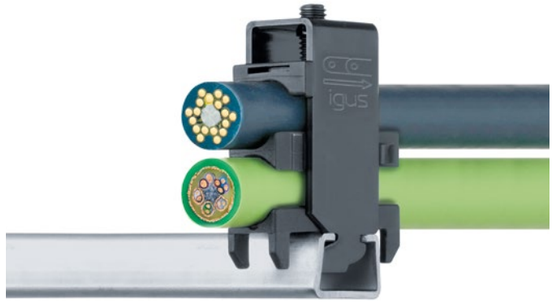

Tiewrap plate for easy strain relief with cable tiewraps
Tiewrap plates are a standard strain relief that can be assembled onto mounting brackets or crossbars, depending on the type. A tiewrap plate is an inexpensive and quick solution for strain relief and can be used for almost any e-chain®.
More information ▶ From page 570.



Special solutions

Strain relief separators - separator with integrated strain relief teeth
Suitable for particularly small installation spaces, the strain relief separators enable strain relief for chainflex® cables.
More information ▶ From page 574.



CFV strain relief - for a stepped strain relief for use outside of the e-chain® section
For stepped strain relief of cables in compact systems.
More information ▶ From page 576.

More solutions ▶ From page 548.



Calculation of e-chain® lengths

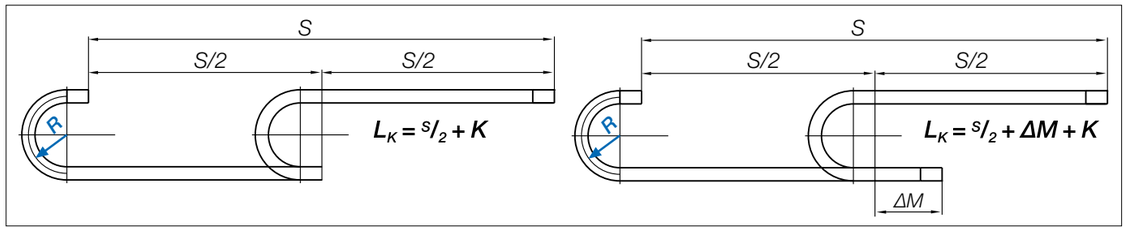

If the fixed end of the e-chain® is located in the centre of the travel, the e-chain® length L_K is calculated by using half the length of travel and adding the value K for the bend radius. You can obtain the value K from the tables in the catalogue. Placing the fixed end in the centre of the travel is the most **cost-effective solution** because it requires the shortest e-chain®, cables and hoses.

$L_K = {}^{S}/_{2} + K$
This formula is generally valid for all types of applications if the fixed end is in the centre of the travel. Exceptions: circular movements and most long travels.

$L_K = {}^{S}/_{2} + \Delta M + K$
This formula is valid if the fixed end is outside the centre of the travel.

Pre-load
The largest possible unsupported length is influenced by the design, material and camber. Camber is the curve of the upper run along its unsupported length. All igus® e-chains® are manufactured with camber.

In the installation dimensions section of each respective e-chain® description, you will find the measurement H_F, which specifies the necessary clearance height, taking the camber into account. The camber allows for longer unsupported lengths and increases service life and operating safety.

Principle of camber for igus® e-chains®
H = nominal clearance height
H_F = required installation height



Upon request, we can deliver e-chains® with reduced camber for restricted space applications - however, these reduced camber e-chains® do not have the same load-bearing capacity. Please reach out to us.

e-chain® design: with crossbars every link or every 2nd link

When to use e-chains® with crossbars every link?
- When guiding very thin cables to prevent the cables from moving out of place
- For narrow e-chains®, to improve lateral stability
- For high lateral accelerations (> 5m/s²), e.g. for highly dynamic linear robots
- In high humidity, because the holding force of the crossbars is lower
- When guiding hydraulic hoses, in order to distribute the force of the hoses over more crossbars
- For travel lengths over 100m
- For travel speeds above 2m/s, gliding

When to use e-chains® with crossbars every 2nd link?
If a version with crossbars every link is not required and the following advantages are to be gained:
- Interior separation easily attainable/accessible
- Less installation work (less crossbars)
- Approx. 10-15% more cost-effective depending on width
- Up to 20% lighter depending on the width



E4 e-chains® with crossbars every link



E4 e-chains® with crossbars every 2nd link

Movement types of energy chains

Moving directions	Application icons	Motion type	Detailed page(s)	Recommended series
Horizontal	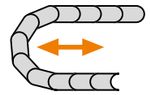	Unsupported	▶ **Page 48**	all series (except OCO, P4HD, autoglide 5)
	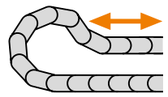	Gliding	▶ **Page 56**	E2.1, E4Q, E4.1, P4HD, autoglide 5
	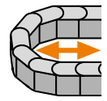	Side mounted / unsupported	▶ **Page 64**	E4.1, E4.1L, E4/Light
	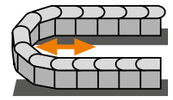	Side mounted / gliding	▶ **Page 65**	E2.1, E4Q, E4.1, E6
	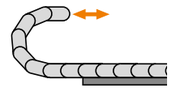	Unsupported lower run FL_U	▶ **Page 54**	E4.1, E4Q
Inclined	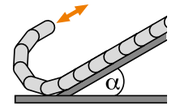	Inclined unsupported length FL_P	▶ **Page 54**	E4Q, E4.1, YE(HD)
Vertical		Vertical hanging	▶ **Page 60**	E2.1, E4Q, E4QL, E4.1, E4.1L
	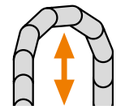	Vertical standing	▶ **Page 62**	E2.1, E4Q, E4QL, E4.1, E4.1L
	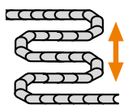	Zig-zag	▶ **Page 63**	E2.1, E4Q, E4QL, E4.1, E4.1L
Rotation	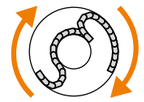	Circular movement RBR	▶ **Page 66**	E2.1 micro, E2.1, E4Q, E4QL, E4.1, E4.1L, E4/Light
		Circular movement scrolling	▶ **Page 67**	E2.1 micro, E2.1, E4QL, E4.1, E4.1L, E4/Light
		Circular movement	▶ **Page 68**	twisterband twisterchain

Short travels

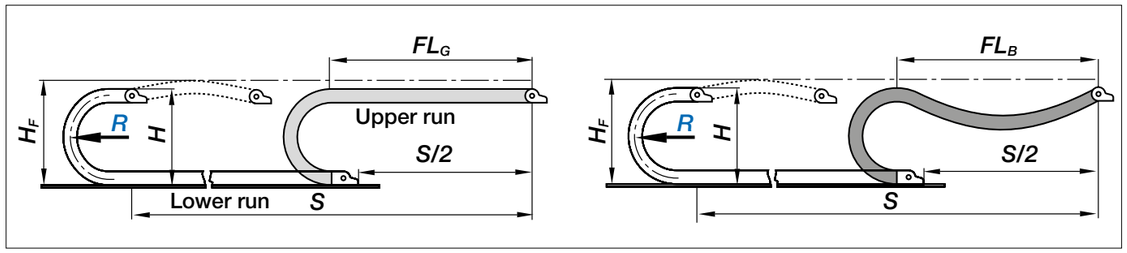

Unsupported

If the upper run of the e-chain® operates without touching the lower run over the entire travel, it is called an unsupported application. The distance between moving end and the beginning of the radius curve of the e-chain® is called the **unsupported length**. The unsupported application is the most common. igus® e-chains® are very well suited for high dynamics and long service life. The maximum unsupported length depends on the fill weight and the type of e-chain® or e-tube. As a result, we differentiate among three types of unsupported length.

Unsupported	FL_G	FL_B
***v* max.**	20 [m/s]	3 [m/s]
***v* peak**	50 [m/s]	–
***a* max.**	200 [m/s²]	6 [m/s²]
***a* peak**	784 [m/s²]	–

The FL_G type of installation always generates the longest service life and can be operated with the max. values for speed and acceleration.

1. Unsupported with straight upper run FL_G
The e-chain® is unsupported FL_G when the upper run still has camber, is straight or has a maximum sag of 1/2 of the e-chain® link height. Installing the e-chain® in FL_G is always recommended. The e-chain® runs smoothly without additional vibration.

2. Unsupported with permitted sag FL_B
The e-chain® is unsupported FL_B when the sag is more than 1/2 e-chain® link height and less than the smallest available radius of this e-chain® series. In most applications the e-chain® can be used unsupported FL_B without any problems. There are restrictions concerning the maximum speed and acceleration.

3. Critical sag
When the sag of the e-chain® is higher than allowed for FL_B, it is in critical sag. Using an e-chain® in critical sag should be avoided or solved with special solutions. An e-chain® should never be installed with critical sag. Applications may reach critical sag after long service times. The e-chain® or e-tube should be replaced in these cases.

1. Unsupported with straight upper run FL_G
2. Unsupported with permitted sag FL_B
3. Critical sag

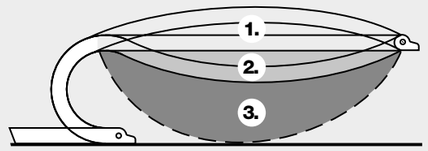

Short travels

What to do if the unsupported length is insufficient?
If your application, fill weight and travel fall outside the unsupported length parameters of the desired e-chain®, you have the following options:

- Select a stronger igus® e-chain®
- Support the e-chain® in the unsupported area. This option means restrictions for acceleration, speed and noise as a consequence - three fundamental examples are detailed to below - please consult igus® if you are considering this possibility - we will gladly provide you with a detailed proposal
- Use a multiband e-chain® or nest two igus® e-chains® inside one another. (Please consult igus®)
- Design the travel distance as a gliding application

For every igus® e-chain® or e-tube, you will find the values for FL_G and FL_B in two locations: on the following pages in this chapter as an overview and within every individual series' chapter.
They are essential for:

- Finding a suitable e-chain® for your fill weight and travel distance
- Identifying the maximum load for the selected e-chain®

Support of the FL_G area
A) The overall straight, unsupported travel can be increased here by a maximum of 50% of the FL_G and in case of option B) by a maximum of 100%.

Support of the FL_B area
C) The overall travel distance can be extended to a maximum of 100% from FL_B.

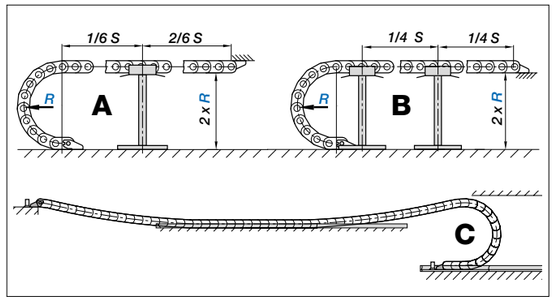

Contact surfaces

Unsupported igus® e-chains® normally require some type of surface on which the lower portion of the e-chain® runs. A wide range of configurations is available, as the drawings on the right demonstrate. Many material options are feasible: metals, polymers, stone, wood, concrete, glass, etc. We also have solutions to minimise the noise generated by the e-chain® lower portion. When selecting the running surface, please ensure that dirt and debris cannot collect in the e-chain® path.

Mounting brackets

Pivoting mounting brackets compensate for the camber, can be installed more easily and decrease the load on the first e-chain® link in operation.

Exception: if the acceleration is greater than 20m/s² or if the height is limited to the H_F measurement.

In such cases, locking mounting brackets keep the e-chain® under the H_F measurement.

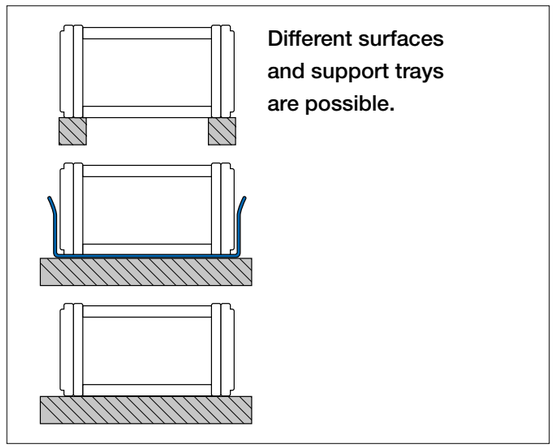

Different surfaces and support trays are possible.

Selection of the energy chain | Load diagrams

***FL* diagrams for the selection and design of the suitable energy chain for specific applications**
They show how the maximum unsupported length depends on the fill weight of the energy chain. The side links are the energy chains supporting elements. They support the weight of the energy chain itself, as well as the weight of the cables and hoses inside it, and the weight of the assembled interior separations. With our E4 e-chain® series, which is available in a range of designs from narrow with a crossbar every second link to wide e-tubes, the weight of the chain itself is an important factor that needs to be taken into account - especially with regard to the service life of the energy chain system.

In the individual e-chain® chapters you will find specific diagrams, each with two lines: one for the recommended unsupported straight length (FL_G) and one for the unsupported length with sag (FL_B), which is only suitable for lower dynamics. The FL_G and FL_B lines are a strong simplification of reality in order to provide a simple design aid.

Our online tools offer precise validation taking into account the chain's own weight: the design of the complete energy chain system by our e-chains® expert or a quick pre-validation using our e-chains® service life calculator (see QR code).

Furthermore, the diagrams do not provide any information about the expected service life of the energy chains. The acceleration in particular is a critical factor that influences the service life, as well as the specific design of the respective energy chain. For a realistic service life calculation (including a guarantee of up to 4 years), please use our e-chains® service life calculator.

For an initial preselection, you will find overview diagrams on the following pages that compare the FL_G lines of all series included in this catalogue. For reasons of clarity, some lines that actually differ slightly from each other have been combined.

e-chain® service life calculator

Our service life calculator gives you the energy chain's expected service life when you enter a few application parameters. You can also use the tool to create a guarantee certificate for up to 4 years.



1. Unsupported with straight upper run FL_G
2. Unsupported with permitted sag FL_B
3. Critical sag - must be avoided!

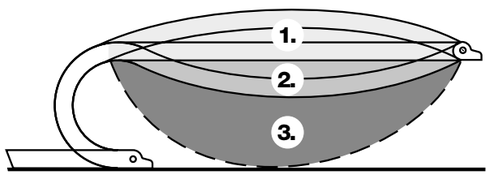

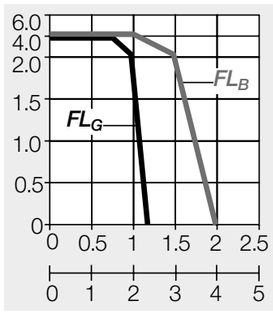

Find the diagram values for FL_G and FL_B also in every individual series chapter.

Unsupported straight FL_G | Fill weights up to 1.75kg/m

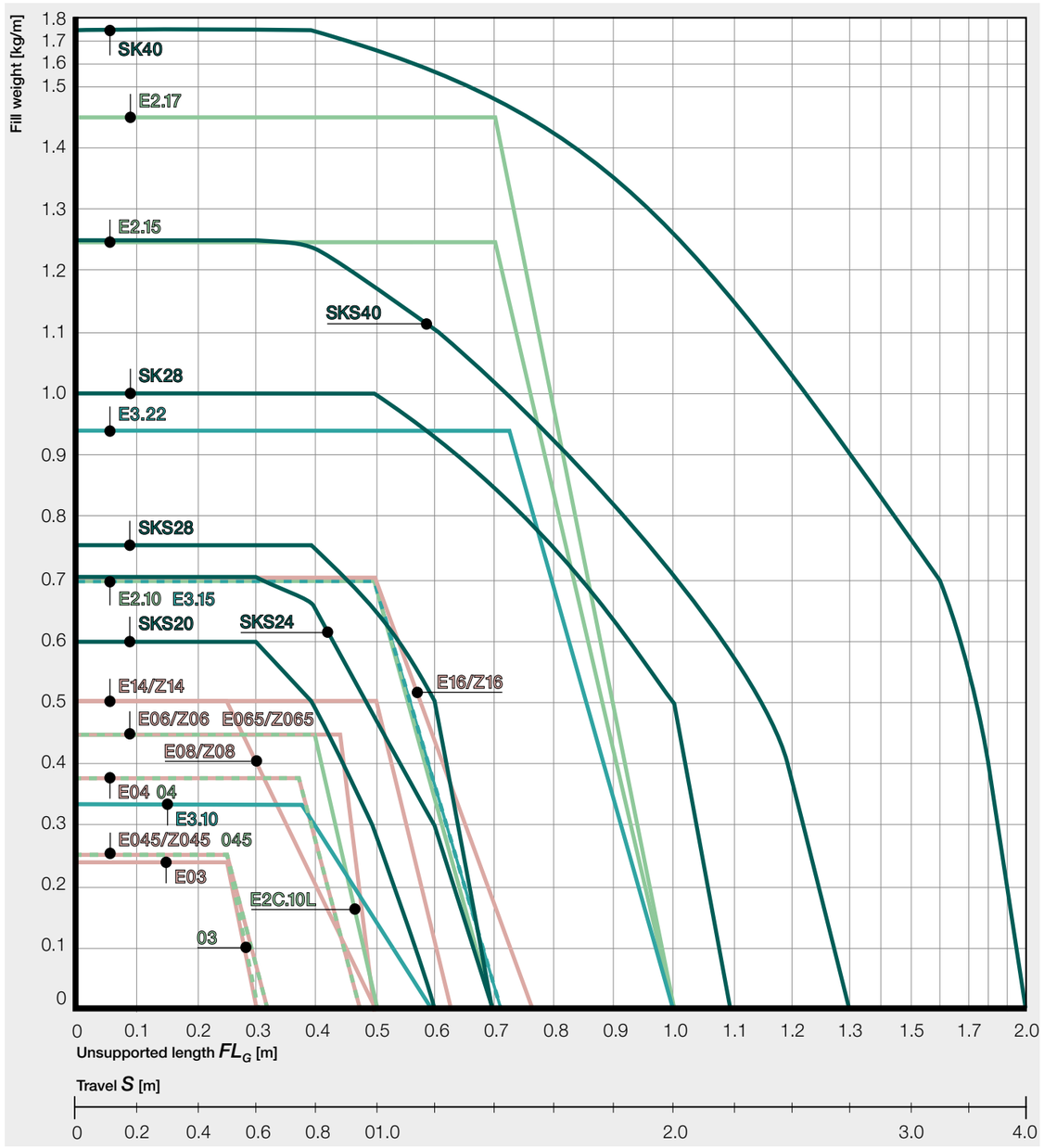

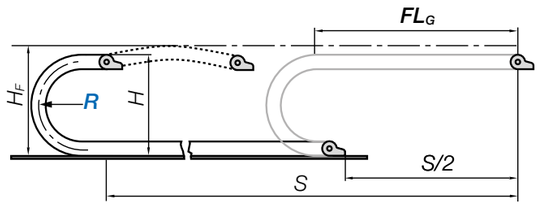

Diagram series - you will also find these diagrams in every individual series chapter in this catalogue.

easy chain® Page 86
E2.1 micro Page 110
E3 Page 420
e-skin® Page 362

Unsupported straight FL_G | Fill weights up to 10kg/m

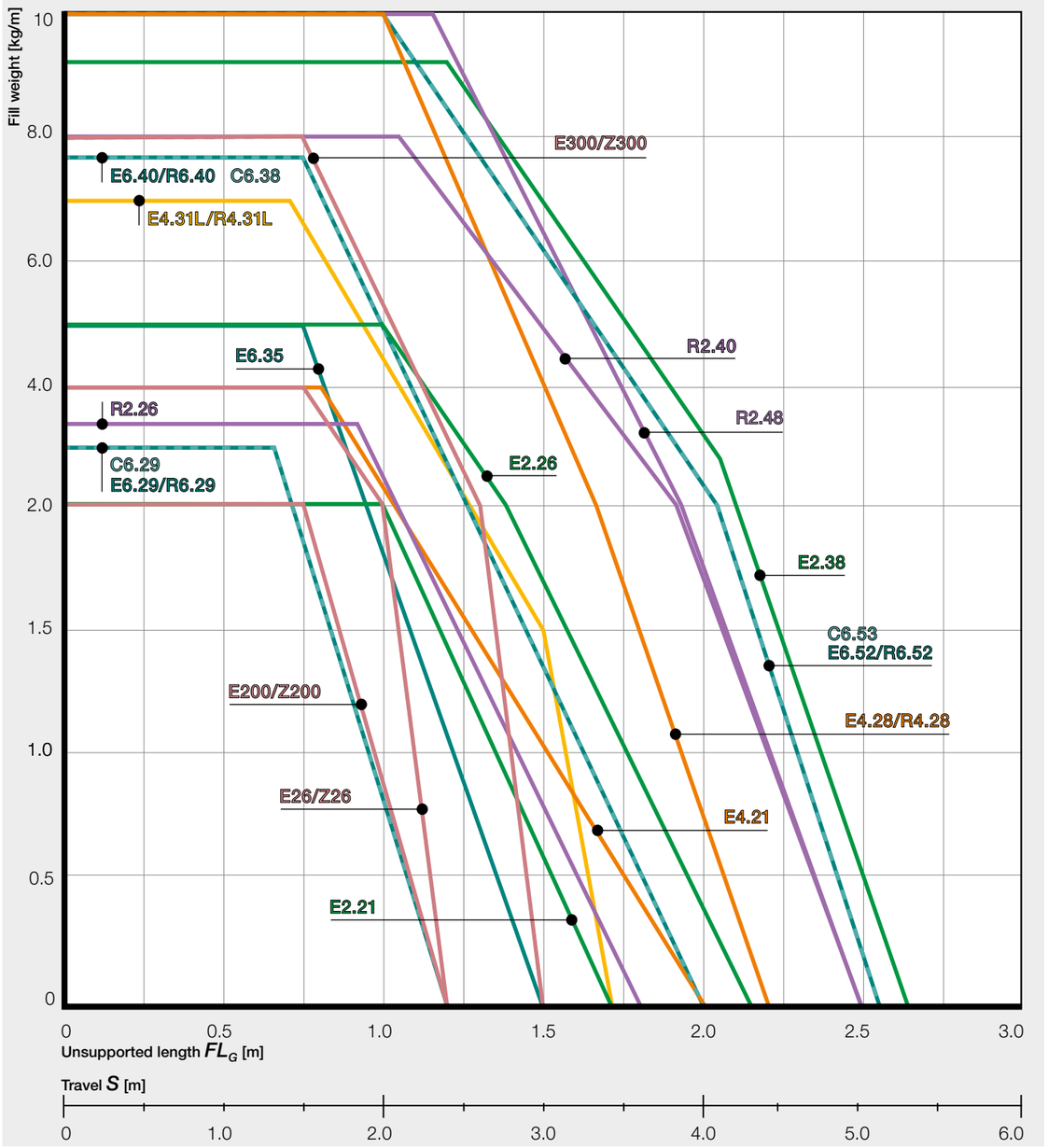

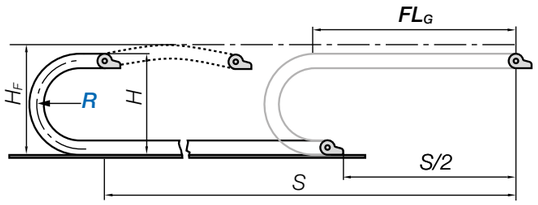

Diagram series - you will also find these diagrams in every individual series chapter in this catalogue.

easy chain®	Page 86	E4.1L	Page 270
E2.1	Page 132	C6	Page 368
R2.1	Page 158	E6	Page 382

Unsupported straight FL_G | Fill weights up to 90kg/m

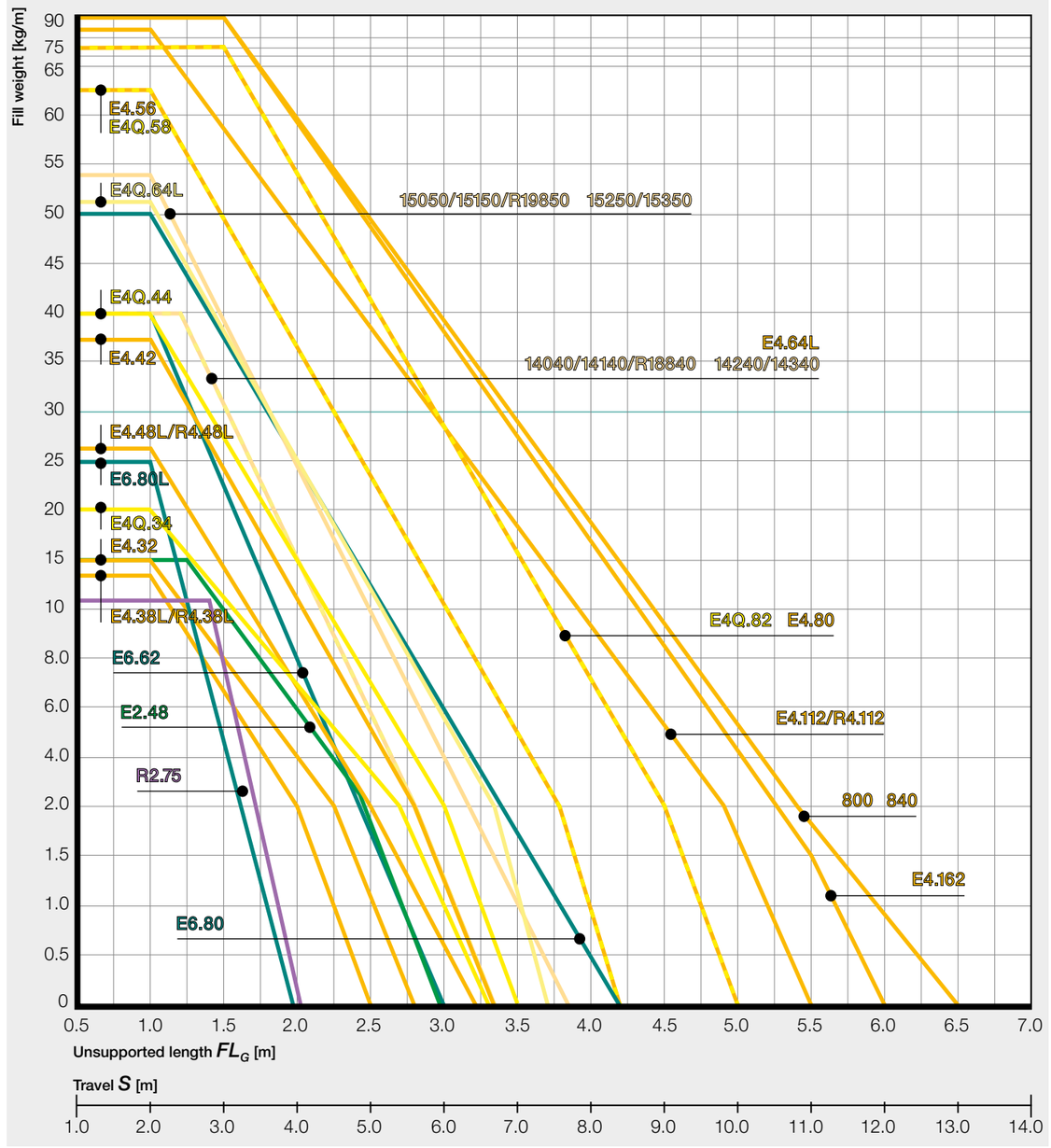

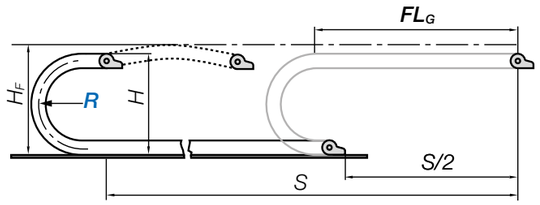

Diagram series - you will also find these diagrams in every individual series chapter in this catalogue.

E2.1	Page 132	E4.1	Page 210
R2.1	Page 158	E4.1L	Page 270
E4Q	Page 176	E4/light	Page 296
E4QL	Page 202	E6	Page 382

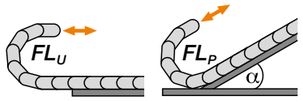

Installation type | Unsupported | FL_U and FL_P

Installation type | Unsupported lower run FL_U

What does unsupported lower run mean?
One speaks of an unsupported lower run ***FL_U*** as soon as part of the lower run of the energy chains is not supported. This installation type enables a compact design in which the workspace area is as close as possible to the footprint of the machine, saving space.

Our recommendation: for short strokes of up to 2m, it can be an attractive alternative to create more space while maintaining the same machine dimensions.

Special features of the unsupported lower run

1. At least the first three chain links of the lower run should be supported to reduce the force on the mounting bracket
2. Supported chain links do not count as part of the ***FL_U area***
3. The maximum unsupported length of the lower run is approximately 1/3 less than the unsupported length ***FL_G***
4. The maximum speed and acceleration data are the same as for the unsupported length with sag ***FL_B***

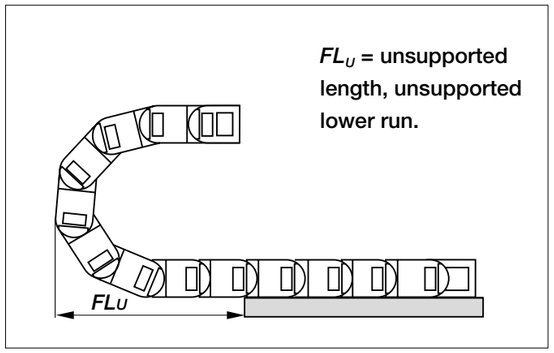

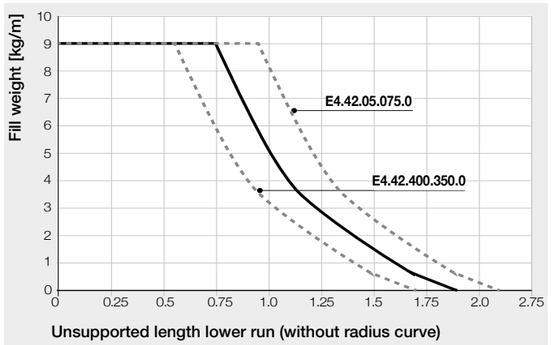

Installation type | Unsupported, inclined FL_P

What does inclined unsupported length mean?
In some applications, the energy chains are often used with an inclined travel. The inclined unsupported length ***FL_P*** installation type is often used in construction machinery or work platforms.

Special features of the inclined unsupported length *FL_P*
In inclined applications, we recommend installing the energy chain so that the arc of the chain radius always points downwards.
The angle **α** indicates the degree of inclination of your machine. At the lowest degree of inclination, the inclined unsupported length of the energy chain and therefore its load is the greatest.

The suitability of igus® energy chains for this type of installation can be checked for specific applications with the e-chain® service life calculator.

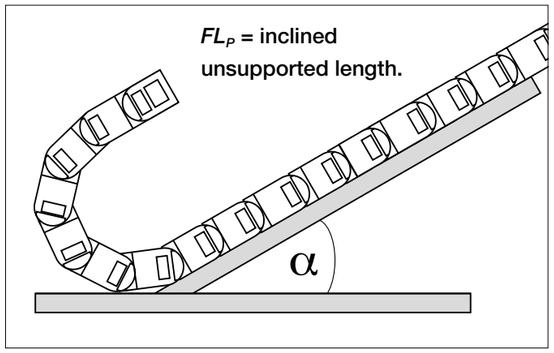

e-chain® service life calculator

After entering a few application parameters, you will receive a statement about the expected service life of the energy chain. You can also use the tool to create a guarantee certificate for up to 4 years.

Installation type | Unsupported | Noise optimised

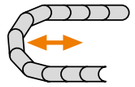

Noise-optimised energy supply solutions

Noise-optimised energy supply solutions
To keep noise to a minimum in production, you need machines that run smoothly. The igus® product range includes e-chains® optimised for low noise and optional accessories for sound reduction in unsupported applications. Have our specialists design the quietest e-chain system® for your application, for example.



We offer numerous e-chains® optimised for low noise. Use the quietest e-chain system® for your application.

Selected noise tests - external noise corrected measurement values

e-chains® series	igus® system	Averaging of the corrected sound pressure levels	Test method unsupported
E61.29	**E6.1**	≈ 32dB(A)	1.0m/s
T3.29	**T3**	≈ 33dB(A)	1.0m/s
E3.22	**E3**	≈ 38dB(A)	1.8m/s
E6.52	**E6**	≈ 46dB(A)	2.0m/s
ES4.42	**E4.1**	≈ 46dB(A)	1.0m/s
SE2i.48	**E2.1**	≈ 54dB(A)	2.0m/s

Values were determined during internal tests in the igus® laboratory.

Noise reduction options

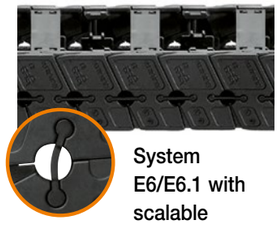

System E6/E6.1 with scalable crossbar.

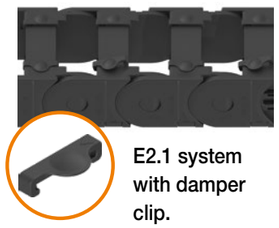

E2.1 system with damper clip.

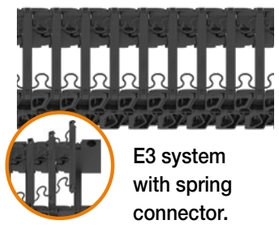

E3 system with spring connector.

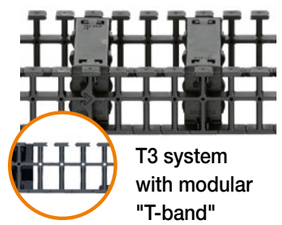

T3 system with modular "T-band"

Long travels

Gliding applications principle
For long travels, the upper run of the igus® e-chains® rests on the lower run. The upper run of the chain glides partly on the lower run and partly on a glide bar. The diagram below shows this. For lateral guidance, a guide trough is necessary. If the stationary mounting bracket and the fixed end of the cables and hoses can be placed **in the centre**, the e-chain® length is calculated as follows: $L_K = {}^{S}/_{2} + K_2$.

Depending on the technical data and the selected e-chain®, the mounting point of the moving end of the e-chain® must be lowered on some units (lowered moving end).

Advantages for lowered moving end
- Space-saving
- Longer travels
- Longer service life

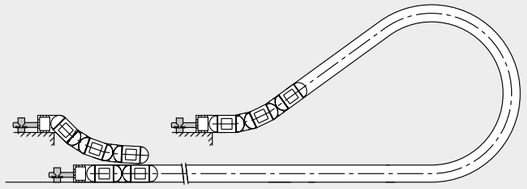

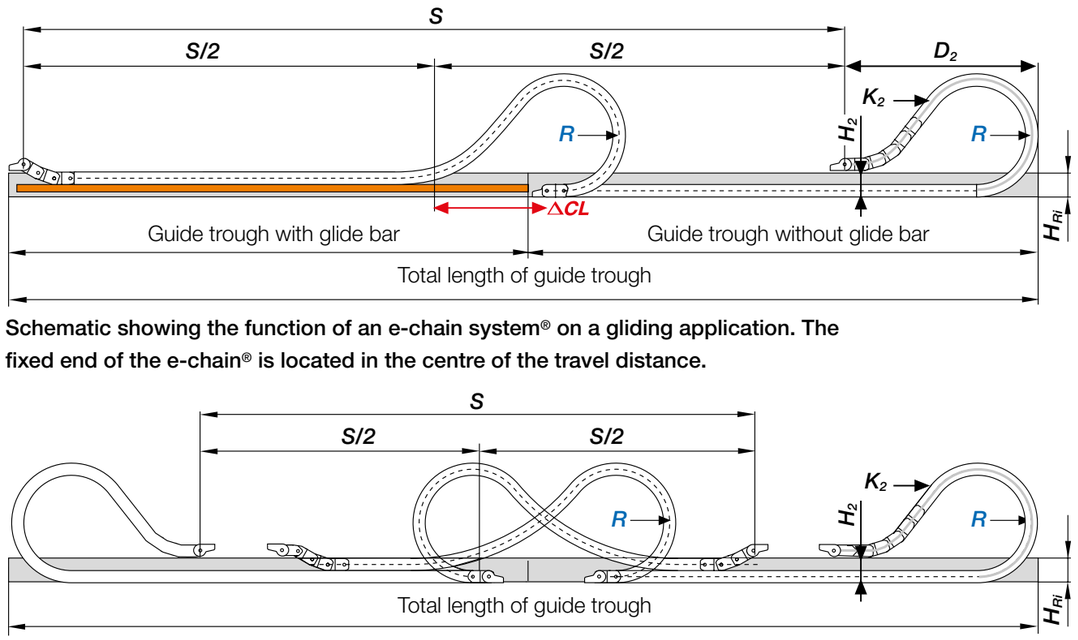

Schematic showing the function of an e-chain system® on a gliding application. The fixed end of the e-chain® is located in the centre of the travel distance.

Configuration involving two opposed e-chains®. For a configuration involving two opposed e-chains®, the travel is measured as shown and can be used when there are high loads or restricted space.

Recommended ratio of inner width *Bi* to bend radius *R*
The minimum inner width of an e-chain® on long travels depends on its bend radius. For particularly large bend radii on long travels, please consult igus®. **igus® specifies: $Bi_{min.} \geq {}^{R}/_{4}$**

Installation type | Gliding

Long travels

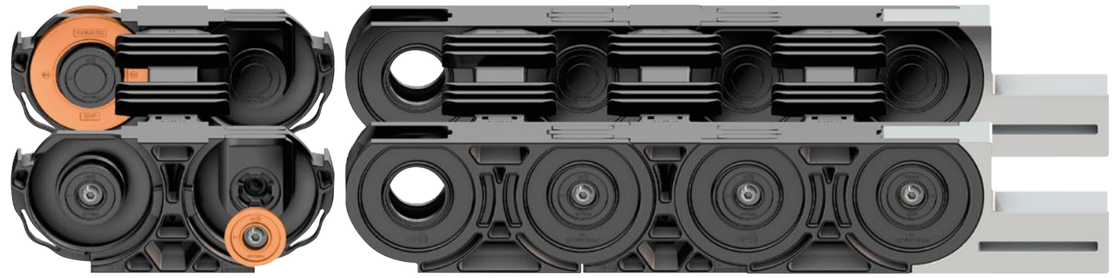

Energy chains with integrated rollers
For most long travel applications, solutions with gliding energy chains are the first choice, both technically and economically. For particularly high requirements in terms of dynamics, fill weight, environment conditions and/or service life, we recommend e-chain systems® with integrated rollers. In this kind of system, the upper run rolls on the lower run instead of gliding. This significantly reduces the push/pull force acting on the energy chain. Some example applications for rol e-chains® include STS cranes, waste incineration and composting plants as well as highly dynamic gantries.

Advantages for long travel applications with igus® e-chains®
- Travels over 1,000m
- 6m/s speed (up to 10m/s possible after consultation with igus®)
- Fill weights up to 70kg/m
- Service life of 10 years and more with igus® e-chain systems®
- More than 20 years of continuous improvement of the igus® rol e-chains® for long travels and reduced drive force

Further advantages compared to alternative technologies
- Many different types of cables and hoses can operate together in the same system (i.e. electrical, data, fibre optic cables with hydraulic and pneumatic hoses)
- Space-saving installation
- Quiet operation
- High accelerations can be absorbed
- Durable in wind, weather, dirt and chemicals
- Easy installation of the modular system on site
- Quick installation and retrofitting of cables

Design assistance, free of charge
We recommend that igus® calculate every gliding application for you. We will always offer the most cost-effective solution, taking the technical requirements and operating safety into consideration.

We need the following variables in order to advise you correctly:
- Length of travel [m]
- Travel speed [m/min] or [m/s]
- Acceleration [m/s²]
- Fill weight [kg/m]
- Maximum cable or hose diameters [mm]
- Type and number of cables
- Intended bending radius [mm]
- Cycle frequency (n/day or n/hour)
- Technical environment

We recommend pivoting mounting brackets for gliding applications!



Long travels

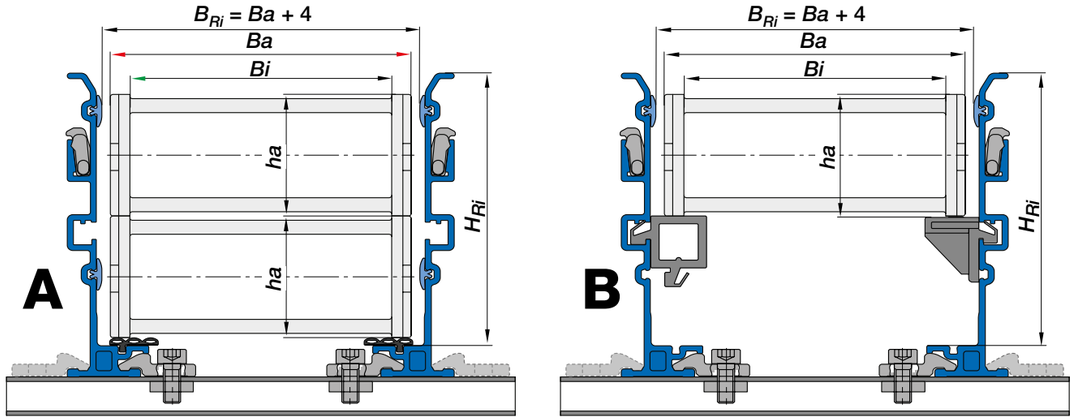

A) Guide trough without glide bars - upper run glides on the lower run.
B) Guide trough with glide bars - the upper run glides on the glide bars from the middle of the travel (image on the right, with the high-speed glide bar).

Long travels with igus® guide troughs
Guide troughs allow igus® e-chain® and e-tubes to continue smooth, low-friction operation in long travel applications. Principle sketches are shown on this page. The height of the trough must be at least twice that of the e-chain® height. The sides must provide a chamfered opening. The trough inner width is the same as the e-chain® outer width, plus 4mm (for the Aluminium SuperTrough) $B_{Ri} = Ba + 4$. Along the side of the trough, where the upper run cannot glide on the lower run, glide bars must be installed.

We recommend the use of igus® polymer high-speed glide bars. They are optimised for use with the e-chain® material and offer the lowest gliding friction, noise and wear - available for Aluminium SuperTrough series 973/974/975. Guide troughs with and without glide bars can be obtained from stock for almost all igus® e-chains®.

Note: When assembling the trough parts, the following points must be given particular attention:
- Properly align all trough parts upon installation
- All screw heads should be flush with the trough
- Smooth level transition between the end of the e-chain® and the glide bars
- Solid connection with the glide surface

These points must be observed when using assembly-friendly igus® guide troughs.

If the fixed point is in the centre of the travel, use half of the guide trough with glide bars and the other half without glide bars.

Glide friction values for e-chains® made of igumid® G LW / CG LW and various glide bars

igus® igumid® G LW / CG LW	Polymer glide bar	Galvanised steel sheet	Anodised aluminium	AISI 304 stainless steel (material: 1.4301)
Coefficient of friction dynamic	0.19	0.45	0.54	0.48

Source: igus® lab, Cologne.

Long travels

Travel speeds and accelerations
Travel speeds up to 6m/s in continuous operation are possible with rol e-chains® and in use on current applications. In special cases, up to 10m/s possible after consultation with igus®. For example, E4 e-chains® achieve speeds of 22m/s and accelerations of 784m/s² in crash test units. In these cases, however, only a few thousand cycles are required per year. Acceleration plays a crucial role in the life calculation. Differentiations must be made between normal operational acceleration and a sudden jolt of acceleration such as unexpected stops or so-called "E-stops". Even in these situations, igus® e-chains® prove to be very durable.

Service life
We offer service life calculations for your application based on our extensive gliding application experience. As developers of polymer plain bearings, we possess vast material behaviour knowledge which we apply to the development of e-chains® as well. Units with 200m travels have been in operation for 8 years with minimum maintenance. Units up to 60m travels have been in operation for 15 years with almost no maintenance. Please consult igus® for references and calculations for your project. The maintenance-free aspects of igus® e-chain systems® over long periods and under harsh operating conditions is often the deciding factor in choosing igus®. Our system guarantee (depends on the application) provides additional peace of mind.

Technical environment
Long travel applications using igus® e-chains® run in water, in dirt, in the tropics, in explosion risk areas (with special design features) and many other conditions. You will find more details in the Technical Environment section of this chapter. Guide troughs can be supplied in corrosion-free materials.

Calculation
Comprehensive tests place us in the position of knowing our products capabilities.
Important factors in testing are:
- High push/pull forces under temperature
- Moisture and dirt
- Plastic coefficient of friction with and without different mating surface
- Behaviour of electrical cables under push/pull force
- Behaviour of hydraulic and media hoses under push/pull forces
- Service life and noise comparison

If we cannot calculate your application based on these factors, we can carry out a test for you in our laboratory. Please consult igus®.

Corrosion-free guide troughs are available in the following materials:
- Standard = seawater resistant aluminium
- Galvanised steel
- AISI 316Ti/AISI 316L stainless steel material 1.4571/1.4404 upon request

Technical data

Long travels		
Max. travel	600m - 800m	
***v* max.**	10m/s	
***a* max.**	50m/s²	Depending on the application, please check with igus®
Fill weight max.	70kg/m	Depending on the application, please check with igus®

Vertical hanging applications

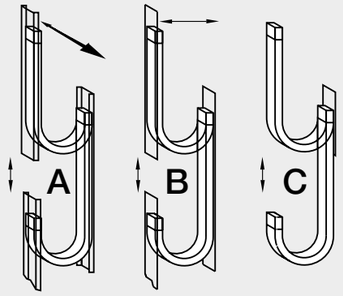

Lateral acceleration can occur in two directions (diagrams A+B). Guidance is necessary. In most cases, vertical motion applications do not require lateral guidance (diagram C).

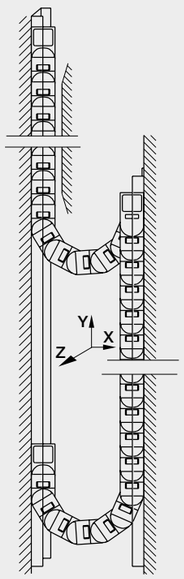

Principle of a hanging igus® e-chain® with lateral guidance, lateral accelerations in both directions are contained. Lateral accelerations in both directions are contained.

Vertical, hanging applications
For hanging applications, heights of over 100m are possible with igus® e-chains®.

Cables and hoses
Two important factors in vertical hanging applications are how the cables and hoses lay in the e-chain® and and how they are secured at the end points: all cables and hoses must be hung so that they bear their own weight. The e-chain® fulfils the function of orderly conduit bundling only and should not absorb any further tensile forces. igus® interior separation elements should be used for distinct division of all cables and hoses. The cables and hoses must be secured carefully to both end points of the e-chain®. The strain relief must be designed so that the opposite run cannot catch. Safe strain relief and clear separation of the cables and hoses are the basic prerequisites for hanging installations. **Cables must be able to move freely and bear their own weight.**

Vertical motion with lateral acceleration
If the application has a purely vertical movement without lateral acceleration, a lateral support is not necessary. If lateral acceleration occurs, lateral guidance of the e-chain® must be provided in most cases. The diagram shows the principle of such guidance. Partial guidance is also an option - however, it must at least cover the area in which the e-chain® may sway. Lateral acceleration can occur in two directions. The lateral guidance must be installed accordingly. **If you have a choice, the layout in figure A is preferred.** The lateral acceleration then acts transversely to the e-chain®, where it is more stable. When using a guide, an e-chain® with camber should be selected. This ensures that the chain is pressed into the trough.

We recommend locking mounting brackets for vertical hanging applications!

Installation type | Vertical hanging

Vertical hanging applications

Vertical hanging		
Max. stroke height	100m	
***v* max.**	20m/s	Depending on stroke height and strength of the e-chain®
***a* max.**	50m/s²	Depending on stroke height and strength of the e-chain®

Reduced camber version with igus® special NC e-chains®
A normal igus® e-chain® with camber is suitable for hanging use if enough space is available. Camber contributes to quiet operation of the e-chain®, but needs a little more space. If there is less space - as is frequently the case for storage and retrieval systems in narrow aisles - an e-chain® with reduced camber must be ordered. igus® offers numerous NC versions. (NC = No Camber, without pretension).
NC version by simply rotating the outer link at E4.1 system.

Hanging igus® e-chain systems® can reach different points.

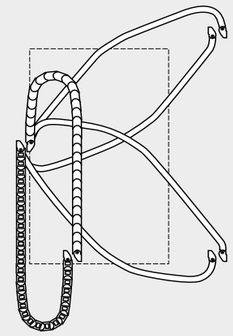

Special solution for vertical applications:

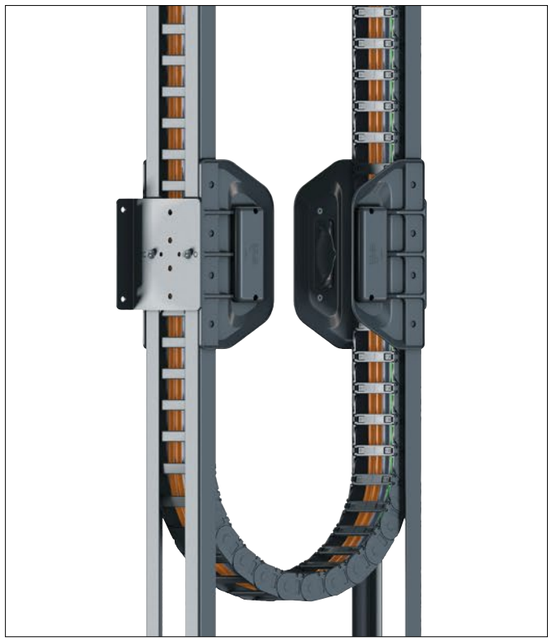

Safe vertical guidance - guidelok slimline P and P.S
More cost-effective, lighter and even easier to install. guidelok slimline "P" and "P.S" plastic guide troughs for vertical applications, especially for all types of storage and retrieval units; now with even lighter components and simplified installation. Locking lever and guide rails prevent the energy chain from swaying or swinging outwards.

Benefits
- Significant savings in costs and weight when compared with a complete housing
- Now also for particularly narrow lanes
- For hanging systems up to 50m
- Fast, safe and easy assembly with plug-in guide rails
- Reduced noise
- Easy access for servicing
- Energy, data and all kinds of media can be safely guided

Installation type | Vertical standing

Vertical standing applications

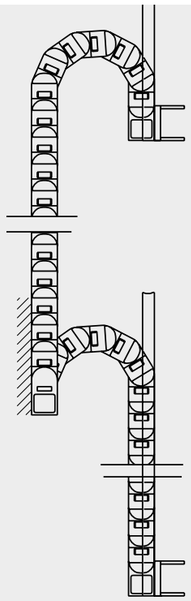

Options for a standing application with support of the first e-chain® links: on the right, with U-shaped guidance - on the left, with the support of the first e-chain® links.

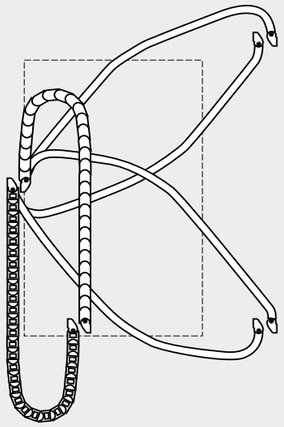

Standing e-chain systems® can reach very different points.

Vertical standing applications
Standing applications are standard on many machines and plants. Cables will be guided safely in vertical strokes.

Mounting brackets
The mounting brackets must be attached so that the e-chain® cannot bow outwards. The igus® product range offers locking or one-sided, locking mounting brackets for almost all types of e-chains®. Locking KMA mounting brackets are highly recommended because they can be attached flush to the machine.
We recommend locking mounting brackets for vertical standing applications!

Cables and hoses
Cables and hoses must be laid in the e-chain® so that they can bend freely and bear their own weight. For precise guidance of the cables and hoses, we strongly recommend igus® interior separation elements. Cables must have strain relief at both ends.

Lateral acceleration
If lateral acceleration occurs, the e-chain® should, in most cases, be supported along the outer radius. For higher e-chain® heights, it is generally recommended that at least the first three links on the outer radius be supported. For maximum heights and weights, the whole distance must often be supported. Due to the wide variety of combinations involving fill weights, stroke heights, e-chain® types and bend radii, we strongly recommend you make use of our consulting services.

Combined motion
Combined vertical and horizontal movements are possible with igus® e-chains® for a cost-saving solution.

Vertical standing	
Max. stroke height - without support	≈ 4m
Max. stroke height - with support of the first e-chain® links	≈ 6m
Max. stroke height - with full support	≈ 20m
***v* max.** (depending on stroke height and fill weight)	20m/s
a max. (depending on stroke height and fill weight)	50m/s²

Installation type | Zig-zag

Zig-zag design

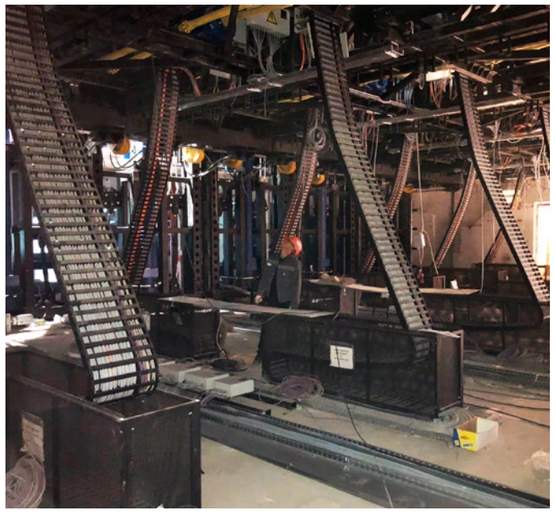

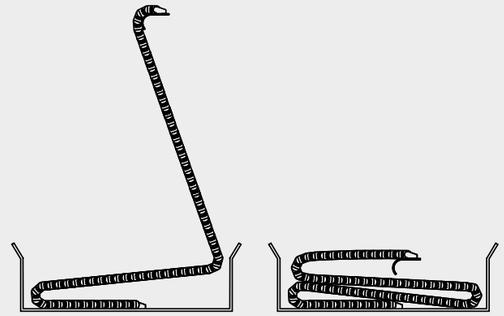

Space-saving installation - travel heights of more than 20m possible. Picture left: extended e-chain®, illustration right: unextended e-chain® stored in a basket.

Zig-zag design
The modular design of igus® e-chains® facilitates this space-saving and unconventional solution. For modern platform technology, such as theatre stages, a variety of cables and hoses which adjust the stage height must be accommodated. Lack of space almost invariably presents difficulties. The picture shows an e-chain® in a zig-zag configuration. The unextended e-chain® is stored in a basket. If the platform is raised, the e-chain® unfolds, generating little or no noise. This construction is possible with the e-chains® of the E4.1 system as well as many other types. Please consult igus® for these kinds of applications.

We recommend pivoting mounting brackets for zig-zag applications.

Zig-zag		
Max. travel	40m	Longer travels upon request
***v* max.**	0.4m/s	Depending on the application, please check with igus®
***a* max.**	1.0m/s²	Depending on the application, please check with igus®

Installation type | Side-mounted, unsupported

Side-mounted applications | Unsupported

Unsupported - side-mounted
igus® e-chains® placed on their side can be used unsupported to a limited extent.

The side-mounted unsupported length depends on:
- Duration in extended, unsupported position
- Fill weight
- Width of e-chain®
- Bend radius
- Parallelism of the application

The greater the fill weight of the e-chain®, the shorter the unsupported length. When placed on its side, the e-chain® width, in effect, becomes the height. As this height increases, the e-chain system® becomes proportionally more stable. If further movement in a second axis is added to the parallel motion of two e-chains®, the unsupported length is impaired. For applications with low fill weight, the standard mounting brackets are adequate. If, however, the fill weight is high and the travels are long, the e-chain® must then be supported either in whole or in part. Due to the variety of application possibilities, we strongly recommend that you make use of our consulting services.

We recommend locking mounting brackets for side-mounted applications!

Side-mounted e-chains® are strongly recommended if the installation height is restricted.

Standard values for side-mounted unsupported lengths are available upon request. The unsupported lengths can be extended by supporting the links next to the mounting brackets.

Example load diagrams for e-chains® side-mounted at 90°

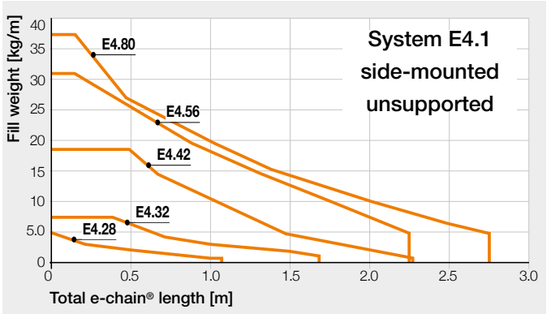

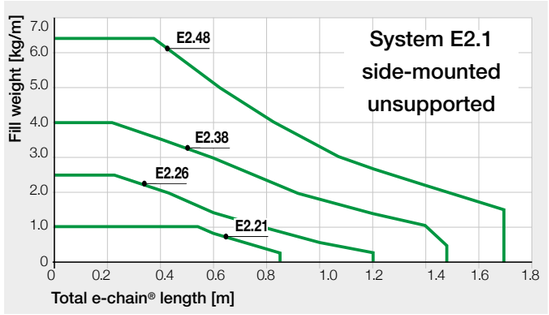

The unsupported lengths can be extended by supporting the links next to the mounting brackets. Please consult igus® for more series and details.

Installation type | Side-mounted, gliding

Side-mounted applications | Gliding

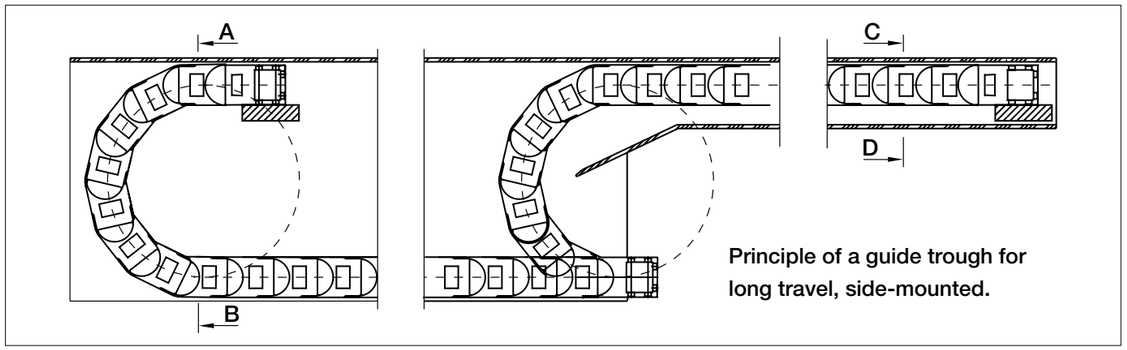

Principle of a guide trough for long travel, side-mounted.

Long travel, gliding
Side-mounted e-chains® can travel over 100m with adequate guidance. All e-chain® types are designed to operate gliding on their side. The corresponding glide surface is usually an igus® polymer, stainless steel (1.4301 material) or galvanised steel, depending on how high the demands on the travel speed and service life are. Roller and ball bearings or additional gliding elements are not necessary for igus® e-chains®.

Cables and hoses
Cables and hoses must be guided so that the e-chain system® can move freely at all times. The igus® modular separation options offers numerous possibilities, such as vertical separators and spacers (see illustration). With the standard e-chain® series, notch separators on the crossbars offer the option of dispensing with spacers. igus® will gladly provide an application analysis, free of charge.

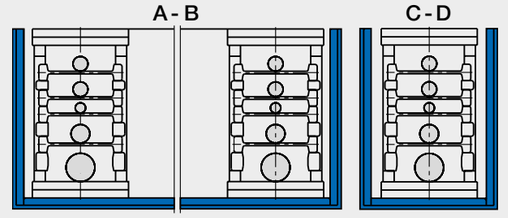

View into a side-mounted energy chain for long travels.

Rotating energy supply

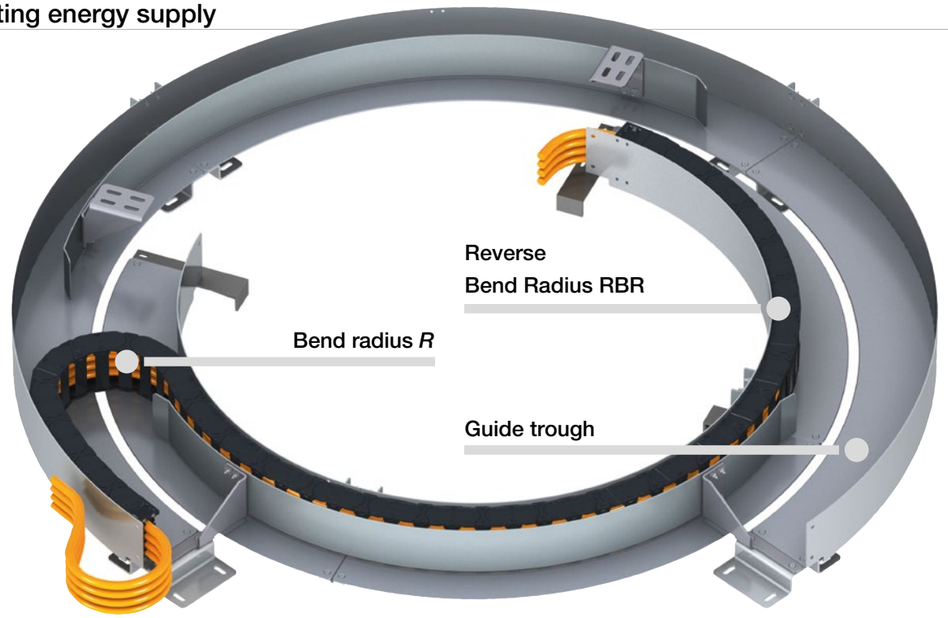

Circular movement *RBR*		
Max. angle of rotation	540°	Higher rotation angles up to 900° MRM
***v* max.**	2m/s	Depending on the application, please check with igus®
***a* max.**	20m/s²	Depending on the application, please check with igus®

The modular system for fast rotating applications with *RBR*

For several years igus® has been developing customised systems for circular movements with e-chains®. The rotating energy supply systems consist of an e-chain® with a Reverse Bend Radius (*RBR*) and a guide trough system adapted to the e-chain® and the circular motion.

igus® offers both trough systems designed for specific projects and some dimensions as pre-engineered standard rotary modules. These guide trough systems consists of two circular guide elements. One part of the guide trough is attached to the static part of the system and the other part to the rotating part of the system. The fixed end of the e-chain® can be freely placed, as both the inside and outside parts of the rotary modules can be rotated. Reverse Bend Radius means that the e-chain® can bend in two directions. Versions with Reverse Bend Radius (*RBR*) can be made for many igus® e-chains® by reworking the standard chain links. The *RBR* does not necessarily need to be identical to the normal bend radius (***R***) of an e-chain®.

- Maximum rotation angle in minimal installation space
- Minimum displacement forces and maximum service life
- Modular construction with standardised mounting options
- Integrated strain relief and cable guidance directly in the guide trough
- Depending on the application in question, the e-chains® glide on surfaces made of plastic, stainless steel or galvanised steel and are guided by special channels in a predefined circular movement.

We recommend pivoting mounting brackets for most applications with circular movement with *RBR*.

Energy chains for circular and spiral movements

You can find the list of e-chains® with Reverse Bend Radius available from stock online on our homepage.

Rotating energy supply | Guide troughs

Standard Rotation Module (RM) systems

Depending on the dynamics and load of the application, the guides are made of steel or stainless steel (material: 1.4301). For applications with high duty cycle, we provide a plastic sliding liner in the guide troughs. The igus® e-chains® do not require any additional sliding pads either for contact with the substrate or with the side walls. We would be happy to offer complete systems with guide troughs, and also support you with drawings for your own construction.

Multi Rotation Module system (MRM)

With the Multi Rotation Module (MRM) you can implement larger angles of rotation of 900° and more. Thanks to stackable add-on modules the angle of rotation can be extended virtually indefinitely. One layer for rotations up to 540°, two layers for 900°, larger angles of rotation are possible with more layers. The rotation and add-on modules are perfectly suited for rotary movements with high fill weights and limited space.

- Several individual systems are stacked on each other and thus are combined to a complete system
- The maximum rotation of the individual levels can be easily added, thereby enabling rotary movements up to 900 degrees and more
- Compact design enables the operation even in tight spaces, extendable "at will"
- High fill weights possible
- e-chains® can be freely assembled
- Peripheral speeds up to 1m/s

How it works

- Is the defined rotation angle of the lower layer reached, the next upper module is carried along automatically due to an integrated connection system. The entire system only needs a mechanical force transfer
- The construction minimises potential interference. The Multi Rotation Module system is ideal for rotary applications, heavy loads and for harsh environments
- Unlike other systems using sliding contacts, the e-chain® can also guide hoses for air, gas or fluids, as well as bus and fibre optic cables
- Even for tough environmental conditions

CAD configurator

RBR Determine the rotating energy supply quickly and easily using the CAD configurator. You can find it online on our homepage.

Rotation module configurator

Quickly and easily configure individual rotating energy supply systems for a wide variety of applications.

Rotating energy supply | Scrolling

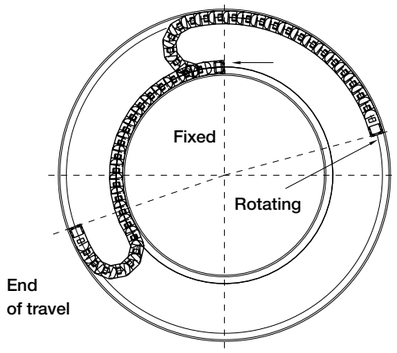

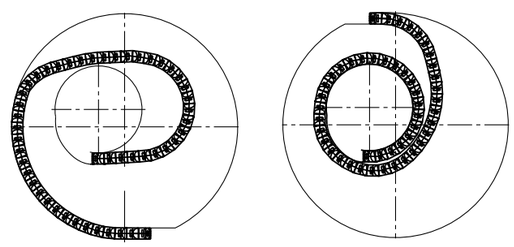

e-chain® with angle of rotation 225°. As an alternative to the Reverse Bend Radius (*RBR*) solutions, the e-chain® can also be rolled up in some applications.

twisterband / twisterchain

Up to 7,000°* rotary movements in small spaces - twisterband
With the compact igus® twisterband, rotations of up to 7,000°* can be achieved cost-effectively, even in confined spaces. Rotary movements up to 3,600° can be ordered from stock. Above 3,600°, please contact igus®.

- Energy, data and media are securely guided.
- Up to 7,000° rotation horizontally and 3,000° rotation vertically
- Rotary speeds of up to 180°/s possible
- Openable with film hinge or openable "easy" design
- HD version with strong pin and hook connection for an even longer service life
- Compact, modular and light
- Strips can be shortened as required
- Minimum installation spaces, fits tightly around the rotary axis
- Cost-effective and easy to fill

More information ▶ From page 434.



Strong, quiet and up to 360° - circular and spiral movements with twisterchain

- Tough, quiet and high dynamics, suitable for high fill weights
- Rotary speeds up to 1m/s and more
- Circular/spiral movements up to 360° from stock (up to 400° upon request)
- Modular interior separation
- Smooth cable-friendly interior
- Openable from both sides - crossbars removable along the inner and outer radius
- Available with guide trough for optimum quiet operation
- Successfully tested for over 1 million cycles in the igus® laboratory

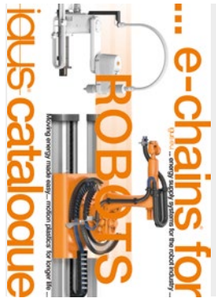

Moving energy made easy - even for robot applications
Further information on twisterchain and triflex® can be found in the Robotics catalogue.



e-spool® flex / e-loop® / triflex® R

The cable reel without a slip ring - igus® e-spool®
Guidance of many different cables types together in a compact system: e-spool® uniquely combines two different energy supply systems.

- More versatile and flexible to use than cable reeling drums
- When different media (power, data and fluids) can be routed together in one system
- Energy supply is possible in all directions (horizontal, vertical, diagonal)
- If travels must be kept free
- Very well suited for use in theatre and stage technology
- No tensile strain on the cables
- Cables can be retrospectively added or changed
- Alternative to zig-zag solutions
- Maximum extension and retraction speed 1m/s
- Large standard product range and special projects available

More information ▶ From page 442.

igus® e-spool® flex

- Guidance of energy and signal cables without interruption
- The ideal solution for "tidy" and reliable cable guidance of mobile operating panels
- Compact type as a prerequisite for universal application

More information ▶ From page 446.

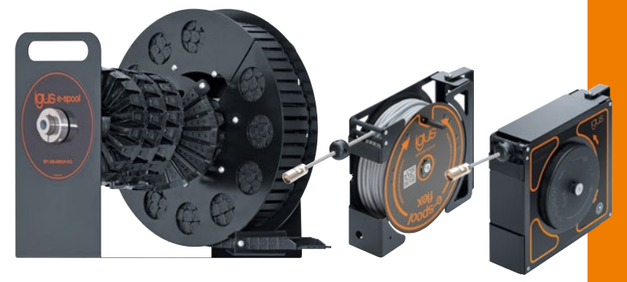

Reliable e-loop® cable guidance for top drives
The e-loop® combines the advantages of a plastic energy chain with those of a high-strength tension rope. Inside the energy chain, the rope transfers the pull force to the mounting brackets and the structure. The e-loop® is used not only in the oil and gas industry, but also in the offshore industry and for onshore power supply, construction machinery, and wind turbines.



- Guide hoses and cables reliably in a single system
- Weather- and dirt-proof
- Protects against impact due to robust PU outer body
- Cables can be added or replaced, even during operation
- Secondary locking tension for all bolted connections offers great operational reliability

More information ▶ From page 464.

3D movements and robots

- triflex® R series for demanding multi-axis robots in harsh industrial environments
- Fibre-rod option for the partial reinforcement of the triflex® R
- Approx. ±10° torsion per link
- High tensile strength due to ball and socket joint



Overview of energy chain materials | Standard



igumid® G LW
With the base material igumid® G LW alone, most of the possible applications can be implemented. The cost-effective material fulfils even conflicting requirements. It can handle continuous temperatures ranging from -40°C to far above 100°C, allowing use in cold store or steel mills. Even applications in snow and ice run smoothly in practice.

igumid® CG LW
The further development of our recycling material igumid® CG is the new base material of our complete E2.1 standard programme.
With the same properties as our igumid® G LW, this sustainable material incorporates both the "end-of-life" energy chains collected as part of our Chainge® recycling programme and other recycled plastic, e.g. from fishing nets.

igumid® NB
Comparable performance values apply to igumid® NB, the standard material for all energy chains of the type easy chain®
The e-chains® in this series are extremely easy to fill. Pliant split crossbars allow cables to be pressed in easily by hand. That is why a material that combines the necessary flexibility and stability has been selected.

igumid® TE
The igumid® TE is used when still higher demands are placed on the permanent elasticity and flexibility of energy chain components. Such applications include the scalable crossbars of the E6 chains, which were developed for extreme dynamics, and the especially tear-proof, flexible zipper e-chain® lids.

igumid® GE
This material is characterised by even greater abrasion resistance and is used in the side parts of our E6 energy chains for dynamic applications, which have been tried and tested for many years.

igumer SK & SKS
This material has been developed for our cleanroom corrugated tubes and is characterised by its abrasion resistance and durability. With this material it is possible to manufacture e-skin® corrugated tubes for cleanrooms of cleanliness class ISO 1 (ISO 14644-1). The SKS igumer material is a softer variant that makes corrugated tubes more flexible and minimises installation space.

igumer SKF
This material is used for the production of e-skin® flat profiles and is characterised by its abrasion resistance. This means that several flat profiles made of this material can be used in rooms of the highest cleanliness class ISO 1, even if they are in contact with each other, with a very long service life.

igus® materials | Overview

Energy chains materials overview | Special

igumid® ESD
ESD-compliant solutions and tools are used in many industries to protect sensitive electronic components from electrostatic discharges. This is especially important for moving parts such as energy supplies. igumid® ESD gives igus® a material that was designed specifically for this challenging application and that can discharge electrostatic charges immediately in a controlled manner.

igumid® EG+
The material is remarkable for its extremely low moisture absorption, which gives it very great resistance to chemicals. The igumid® EG+ has been specifically developed for applications with aggressive chemicals, such as those used, for e.g. in galvanisation or fertiliser production, where it serves in both energy chains and trough systems. Where expensive stainless steel was previously necessary as a trough material, igumid® EG+ now offers a cost-effective alternative.

igumid® HT
This special material is resistant to maximum temperatures of up to 850°C at short-term. This makes the material ideal in applications with hot swarf, e.g. in machine tools. The closed design of e-tubes prevents swarf from getting into the system and the lids made of igumid® HT also ensure that swarf does not stick with temperatures up to 850°C. Availability upon request.

igumid® XXL
E4 e-chains® made of this special material achieve greater unsupported lengths or allow higher fill weights with the same unsupported length. They are manufactured upon request. However, the stiffer material does reduce the service life to some extent.

igumid® DT
The development of the plastic compound igumid® DT was intended in particular for applications throughout food production. The basic material was modified so that a fragment of just 1mm can be detected by all commonly used detection systems. In this way, any splinters can be detected and automatically removed.

igumid® G V0 GF / igumid® NB V0
Special variants of the standards energy chains with self-extinguishing properties according to UL94-V0 are made of these materials. Availability upon request.

Material properties

e-chain® Series/system	Units of measurement	igumid® G LW	igumid® CG LW	igumid® NB	igumid® TE	igumid® GE	igumid® ESD	igumid® EG+	igumid® HT	igumid® XXL	igumid® DT	igumid® G V0 GF	igumid® NB V0
Short description		Basic material e-chains®	Base material System E2.1	Basic material easy chains®	For permanently elastic components	For increased abrasion resistance	Dissipative special material	Acid-resistant special material	Short-term high temperature resistance	Special material for higher rigidity	Special materials for the food industry	Special material according to UL94 V0	Special material according to UL94 V0
Mechanical properties													
Mechanical properties													
Yield stress (dry/wet)	MPa	190/130	190/130	78/40	*	*	*	*	*	*	*	*	*
Elongation at break (dry/wet)	%	004/006	004/006	20/120	*	*	*	*	*	*	*	*	*
Flexural modulus (tensile test)	MPa	9000/7000	9000/7000	2900/1200	*	*	*	*	*	*	*	*	*
Limit of elasticity (bending test)	MPa	7800	7800	3000	1290	7200	9500	*	*	*	6000	9800	3100
Flexural strength	MPa	240	240	120	55	200	230	*	*	*	180	210	115
Shore D hardness	–	79	79	79	72	80	83	78	84	*	85	79	75
General properties													
Density	g/cm³	1.37	1.37	1.14	1.02	1.46	1.2	1.24	1.4	*	1.49	1.43	1.15
Moisture absorption 23/50 r.h.	% weight	1.4	1.4	3.4	0.8	0.7	1.9	<0.1	1.5	*	2.0	2.1	2.2
Maximum water absorption	% weight	5.6	5.6	7.6	1.6	4	7.3	<0.1	5.6	*	6.0	6.5	9.0
Electrical properties													
Specific volume resistance	Ω*cm	$>10^{11}$	$>10^{11}$	$>10^{11}$	$>10^{11}$	$>10^{11}$	$<10^{9}$	$>10^{11}$	$>10^{11}$	$>10^{11}$	$>10^{11}$	$>10^{11}$	$>10^{11}$
Surface resistance ROA	Ω	$>10^{11}$	$>10^{11}$	$>10^{11}$	$>10^{11}$	$>10^{11}$	$<10^{9}$	$>10^{11}$	$>10^{11}$	$>10^{11}$	$>10^{11}$	$>10^{11}$	$>10^{11}$
Thermal properties													
Lower operating temperature	°C / °F	-40°C / -40°F	-40°C / -40°F	-40°C / -40°F	-40°C / -40°F	-40°C / -40°F	-40°C / -40°F	0°C / 32°F	-40°C / -40°F	-40°C / -40°F	-40°C / -40°F	-40°C / -40°F	-40°C / -40°F
Max. long-term application temperature	°C / °F	+120°C / +248°F	+120°C / +248°F	+80°C / +176°F	+70°C / +158°F	+120°C / +248°F	+80°C / +176°F	+90°C / +194°F	+140°C / +284°F	+120°C / +248°F	+80°C / +176°F	+90°C / +194°F	+80°C / +176°F
Max. short-term application temperature	°C / °F	+180°C / +356°F	+180°C / +356°F	+170°C / +338°F	+140°C / +284°F	+200°C / +392°F	+150°C / +302°F	+170°C / +338°F	+200°C / +392°F	+180°C / +356°F	+120°C / +248°F	+140°C / +284°F	+140°C / +284°F
Material certificates													
Fire resistance according to UL94	–	HB	HB	V2	HB	HB	HB	HB	HB	HB	HB	V0	V0
Silicone-free	–	√	√	√	√	√	√	√	√	√	√	√	√
Halogen-free	–	√	√	√	X	X	√	√	√	√	√	√	√
2015/863/EU (RoHS3)	–	√	√	√	√	√	√	√	√	√	√	√	√
1907/2006 EG (REACH)	–	√	√	√	√	√	√	√	√	√	√	√	√
Colour													
according to RAL, approx.	–	≈ RAL9004	≈ RAL9004	≈ RAL9004	≈ RAL9004	≈ RAL9004	≈ RAL7015	blue	≈ RAL9004	≈ RAL9004	blue	≈ RAL9004	≈RAL9004
Are special colours possible?	–	√	√	√	*	*	X	X	X	X	X	X	X

√ = Yes / X = No / *Values upon request

Colours and special solutions

Product prices are always based on the colour black. Any other colours that are not shown in the chart are individually calculated depending on the article and quantity, insofar as this is technically possible. As a rule, coloured e-chains® are not available from stock. Delivery time and surcharges for coloured e-chains® are available upon request. As a rule, all specifications related to stability (for instance unsupported lengths) and material characteristics apply only to black e-chains®.

The characteristics of coloured e-chains® may differ. This also applies to all igus® e-chains® from special materials, such as conducting e-chains® made from igumid® ESD material or other special materials.

For technical reasons special materials cannot be supplied in other colours, or a prior material development, sampling and approval process is required.

e-chain® colour variations with RAL-numbers

Colour designation		RAL	Index
Black	Standard, from stock	≈ 9004	**.0**
Silver-grey	Special colour	≈ 7001	**.31**
White	Special colour	≈ 9003	**.1**
Grey-white	Special colour	≈ 9002	**.1S**

Colour designation		RAL	Index
Orange	Special colour	≈ 2003	**.2**
Yellow	Special colour	≈ 1018	**.4**
Light grey	Special colour	≈ 7035	**.14**
Ultramarine blue	Special colour	≈ 5002	**.81**

Chemical resistance of igumid®

Medium	Concentration % weight	igumid® G LW / NB	igumid® EG+
Acetone	100	●●	●●
Formic acid (aqueous)	2	●	●●
Ammonia (aqueous)	10	●●	●●
Gasoline	100	●●	●●
Benzene	100	●●	●●
Bitumen	100	●	X
Boric acid (aqueous)	10	●●	●
Butyric acid	100	●	X
Calcium chloride (aqueous)	Sat. aq. sol.	●●	●●
Chlorinated hydrocarbons	–	●●	●
Chlorine water	Sat. aq. sol.	X	X
Chromic acid (aqueous)	1	●	X
Diesel oil	100	●●	●●
Acetic acid	2	●●	●
Acetic acid	50	X	●●
Colour	–	●●	●●
Greases, cooking fat	–	●●	●●
Fluorinated hydrocarbons	–	●●	●●
Hydrofluoric acid	30	X	●●
Formaldehyde (aqueous)	30	●	●
Hydraulic oils	–	●●	●
Caustic potash	10	●●	●●
Potassium carbonate (aqueous)	60	●●	●●
Potassium sulphate (aqueous)	100	●●	●●
Methyl acetate	100	●●	●●
Milk	–	●●	●●
Mineral oil	–	●●	●●
Sodium carbonate (aqueous)	50	●●	●●
Oil, lubricating oil	–	●●	●●
Oil, cooking	–	●●	●●
Oleic acid	100	●●	●●
Paraffin oil	–	●●	●●
Perchloroethylene	100	●●	X
Phosphoric acid	80	X	●●
Polyester resins (with styrene)	–	●●	●●
Propane gas	–	●●	●●
Mercury	–	●●	●●
Nitric acid	40	X	●●
Hydrochloric acid	pH2	●	X
Hydrochloric acid	2	X	X
Hydrochloric acid	10	X	X
Hydrochloric acid	100	X	●●
Sulphuric acid	60	X	●●
Ink, printing ink	–	●●	●●
Vaseline	–	●●	●●
Tartaric acid	–	●	●●
Zinc sulphate (aqueous)	10	●●	X

The values specified are values determined by igus® laboratory tests and are material-specific.
All specifications apply to black e-chains®.

●● = Resistant
● = limited resistant
X = Non-resistant
Sat. aq. sol. = Saturated aqueous solution

Environmental influences overview

The suitability of an energy chain for an application depends not only on the technical parameters such as travel length, fill weight and dynamics. The technical environment, i.e. the environmental conditions under which the energy chain is used, also has a decisive influence on the functionality and service life of the energy chain system.

igus® energy chains have proven their suitability in a wide variety of environments over many years. This can be in environments that are particularly dirty, such as composting plants; acidic, such as electroplating facilities; or subject to adverse weather conditions, such as continuous operation on port cranes. Together, we will find the best energy supply solution for your particular application. Take advantage of our extensive experience and global project planning expertise and availability.

igus® experience with: dust, dirt, mud, compost, wood, textile fibres, paper dust, abrasive paste, cooling agents, glass dust, glass splinters, coal dust, sand, corundum and much more.

Spatter, coarse swarf

Laboratory tests and numerous field applications have proved that igus® e-chains®, and e-tubes in particular, reliably protect cables in welding robots and machine tools since 20 years. e-tubes made from the igus® igumid® HT material are resistant to hot swarf up to +850°C (1,562°F), no swarf sticks

Fine dust and swarf

Fine swarf or dust pose a particular challenge for energy chains. Over time, these can accumulate in the stop-dog system of the energy chains, causing the radius arc to grow. For these applications, igus® offers the AX series of e-chains®, which have external stop-dog

Strong environmental effects

Energy chains are sometimes exposed to extreme weather conditions, e.g. in port cranes, wastewater and sewage treatment plants or construction machinery. Thanks to their good UV resistance, robust design and optional housing solutions, many igus® e-chains® achieve a long service life even under these conditions.

Radiation resistance

igus® offers several solutions for high-radiation areas. igumid® G LW is very resistant to high-energy radiation. Under gamma radiation, in the range of 8 x 10^4 rd, the mechanical properties of igumid® G LW change very little.

Vacuum

igus® e-chains® made of igumid® G LW can be used in vacuum applications. Very little outgassing occurs. Outgassing values available upon request.

Chemical resistance

igumid® G LW is resistant to fuel, lubricants, oils, fats, alcohol, ester, ketone, and aliphatic and aromatic hydrocarbons. Oxidants and acids are damaging. The table on the left shows an excerpt of the resistance to chemicals. Acid-resistant e-chains® made of special material igumid® EG+ are available upon request.

Coolant resistance

e-chains® and e-tubes have proven resistance to cooling agents. However, we are always willing to perform individual tests if you have particular problems or advanced developments.

Table on resistance to chemicals ▶ Page 74.
More information about:
ESD ▶ Page 76
ATEX ▶ Page 77
Cleanroom ▶ Page 78
Dry room ▶ Page 80

ESD = Electro Static Discharge

ESD-compliant e-chains®
ESD energy chains are energy supply systems for use in preventing electrostatic charges in the manufacturing processes of electronic components or assemblies in order to protect sensitive electronics from damage caused by electrostatic discharge (ESD).

Measurements of the electrical surface leakage resistance for igus® energy chains with the special material igumid® GC, were made back in 1992 by igus® GmbH together with the PTB (Physikalisch-Technische-Bundesanstalt) in Braunschweig, supplemented by additional certifications in 1998 and 1999 according to DIN 53482, and the guidelines for static electricity ZH1/200 of the Federation of Trade Associations.

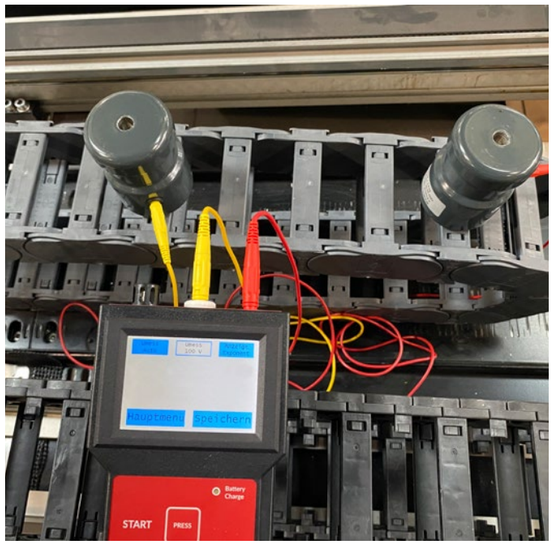

Advantages of ESD-compliant energy chains
- Long service life: ESD material tested with over 10 million cycles for highest requirements
- Openable energy chains with mounting brackets and interior separation in ESD version available from stock
- Standardised product made from igumid® ESD
- Proven over years of use in explosion-proof areas
- Short delivery times

ESD test in the igus® laboratory
igus® recommends using the igumid® ESD material to discharge such electrostatic energy in the production of sensitive electrical components. In some areas, igumid® ESD even outperforms the standard igumid® G LW material and has been tested in the igus® technical centre for over 10 million cycles.

Picture above: 100% of the produced ESD e-chains® are checked for their continuous conductivity from one end to the other.

The following e-chain® series are certified by the ESD Academy:
easy chain®, E2.1, E4.1, E6, triflex® R, E3, T3


ESD-AKADEMIE
PRODUCTCERTIFICATE
E-Chain systems of the series
„easy chain®" / „E2.1 Serie" / „E4.1 Serie"
„E6 Serie" / „Triflex R" / „E3" / „T3"
igus® GmbH
Spicher Straße 1a, 51147 Cologne / Germany
Requirements for using in ESD protection areas (EPA) in accordance with
IEC 61340-5-1
DIN EN 61340-5-1

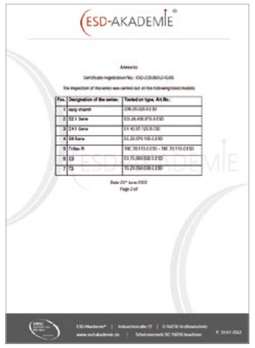
ESD-AKADEMIE

ESD (Electro Static Discharge) - avoidance of static charges in the field of manufacturing processes of electronic components or assemblies.

ESD = Electro Static Discharge

1. General safety information
These additional operating instructions apply to our ESD e-chains® in colour grey (similar to RAL 7015). They supplement the assembly instructions for the standard e-chains® and the catalogue information.

The information in these instructions relates only to data regarding ESD areas. The technical information in the installation instructions for standard e-chains® and the category information still apply unless these instructions explicitly exclude or replace the relevant information.

2. Assembly, removal and installation
Please follow the information in the installation instructions for the standard e-chains® and the catalogue information on assembly, removal and installation for trouble-free operation.

igus® ESD e-chains® must be grounded with appropriate measures in accordance with drawing number 18392 in order to discharge any occurring electrostatic.

Assembly, installation, commissioning and maintenance may be performed only by personnel properly trained in explosion protection!

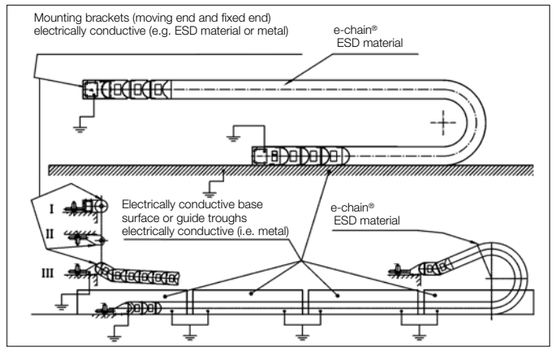

3. Commissioning
Before commissioning the system, check that the system has been installed correctly in accordance with the installation instructions for the standard e-chains® and the catalogue information. Correct grounding must be checked in particular in the case of ESD e-chains®.

4. Maintenance
igus® e-chains® require very low maintenance. Correct grounding of the ESD e-chains® must be inspected at regular intervals. In case of large projects a customised maintenance plans can become an issue and will be created if necessary.

ATEX

Although the parts offered by igus® are components according to the ATEX definition and hence ought to meet the ATEX guidelines, they themselves do not have to be certified.

According to a TÜV Rheinland assessment, the ESD parts offered by igus® do not fall under the guideline 2014/34/EU because they have no autonomous function and no ignition source of their own. Hence, they cannot be declared as being ATEX compliant. Nevertheless, components from ESD material prevent static loads and the resulting explosion hazard, which will help users acquire ATEX certification for the entire plant.

We recommend using ESD energy chains for ATEX areas. The responsibility for the ATEX conformity of a system lies with the system manufacturer.

Please also note the corresponding national safety regulations and the relevant national regulations in respect of explosion protection during installation and operation.

According to a statement by TÜV Rheinland 557/Ex125071309.00/17, igus® e-chains® do not fall under the scope of application of Directive 2014/34/EU.

Cleanroom applications IPA cleanroom Class 1 to cleanroom Class 5

In robots or pick-and-place applications, in semiconductor manufacturing and microelectronics: igus® offers components for any cleanroom to improve technology and reduce costs. In cleanrooms, moving component abrasion must be especially low, as any contamination is harmful to products and processes. This costs money. We develop and test our high-performance polymer products in our own cleanroom laboratory with the greatest care, and in order to show that our products are ideal for use in cleanrooms, we have the Fraunhofer Institute subject them to further tests. This gives us an IPA-tested product portfolio with the best possible cleanroom classification (ISO Class 1).

- Since 1997, energy chains for cleanrooms
- 4,000m² test laboratory unique in the industry with its own cleanroom lab
- Over 9,000 e-chain® parts with ISO 1-5
- Over 1,100 cables with ISO 1 and 2
- 40 million guaranteed double strokes with CFCLEAN and 100 million double strokes with CF98.PLUS/CF99.PLUS
- ISO 1 after 60 million double strokes with e-skin® flat system

Fraunhofer TESTED® DEVICE
IPA
igus GmbH
Energy chain / Cable systems
Report No. IG 0704-400

Fraunhofer Institute IPA tests for various igus® e-chains® (according to DIN EN ISO 14644-1)

IPA cleanroom Class	e-chain® series for cleanrooms	Report number	Speed [m/s]
ISO Class 1	e-skin® flat system	IG 2102-1212	0.5 / 1.0 / 2.0
ISO Class 1	e-skin flat 3 layers	IG 2107-1242	0.5 / 1.0 / 2.0
ISO Class 1	SKS28.068.02.1 e-skin® soft + cable	IG 1907-1125	0.5 / 1.0 / 2.0
ISO Class 1	0.SK28.068.02.1 e-skin	IG 1907-1125	0.5 / 1.0 / 2.0
ISO Class 1	C6.29.060.100.17	IG 2304-1412	0.5 / 1.0 / 2.0
ISO Class 1	E6.29.060.100.0	IG 2409-1552	0.5 / 1.0 / 2.0
ISO Class 1	E61.29.050.075.0	IG 1303-640	0.5 / 1.0 / 2.0
ISO Class 1	E3.15.040.075.0	IG 0704-400	0.5 / 1.0 / 2.0
ISO Class 1	TH3.25.2/26.070.8	IG 2304-1412	0.5 / 1.0 / 2.0
ISO Class 2	SKS20 + TR.CSCS Clean SCARA Cable Solution	IG 2303-1401	0.5 / 2.0
ISO Class 2	T3.29.050.038.0	IG 1303-640-1	0.5 / 1.0 / 2.0
ISO Class 2	1500.050.038.0	IG 1303-640-1	0.5 / 1.0 / 2.0
ISO Class 2	E14.3.038.0	IG 0308-295	0.5 / 1.0 / 2.0
ISO Class 3	2500.05.055.0	IG 0308-295	0.5 / 1.0 / 2.0
ISO Class 5	GLO.CR.56 with E6.52 system for long travels	IG 2303-1406	0.5 / 1.0 / 2.0
ISO Class 5	E4.32.10.063.0	IG 1303-640-1	0.5 / 1.0 / 2.0

1) Individual series of igus® e-chains® from e-skin®, E6, E6.1, T3, E3, E2/000, E4.1 and easy chain® families have been given ISO Class 1 to ISO Class 5 certification by the Fraunhofer IPA institute in accordance with DIN EN ISO 14644-1 (Report IG1303-640-1, IG0704-400, IG308-295 and IG 1907-1125).
This corresponds to almost 10,000 articles from the e-chain® product range of the same type of construction/based on the same principle.

Technical environment | Cleanroom

Cleanroom laboratory

Unique igus® cleanroom laboratory for IPA cleanroom Class 1 components - innovative cleanroom technology successfully on the test rig!
In semiconductor manufacturing, components such as e-chains® and cables must meet the highest standards regarding their release of particles. In order to be able to develop new motion plastics that are suitable for use in cleanrooms, the Fraunhofer IPA, working as a development and certification partner on behalf of igus®, has now designed and built a tailor-made cleanroom laboratory with an ISO cleanroom Class 1 system in Cologne.

In the new laboratory, customer tests and new developments can be carried out in advance under real conditions within a very short time. Furthermore, our new cleanroom laboratory helps considerably in the continuous further development of our cleanroom products and materials.



Some igus® cleanroom e-chains® in comparison

Specification/ Description	e-skin® flat SKF	e-skin® SK	e-skin® SKS	System C6	System E6
IPA cleanroom Class 1 according to EN ISO 14644-1	√	√	√	√	√
Modular design	●●●●●	●●●	●●●	●●●●	●●●●
Components individually interchangeable	√	√	√	√	√
Openable	●●●●	●●●●●	●●●●●	●●●●●	●●●●●
Easy maintenance	●●●	●●●●	●●●●	●●●●●	●●●●●
Available from stock	√	√	√	√	√
Can be shortened	√	√	√	√	√
No minimum order quantity	√	√	√	√	√
Cost-effective	●●●	●●●●	●●●	●●●●	●●●●●
Suitable for unsupported applications	●●●●	●●●	●●	●●●●●	●●●●●
For high dynamics	●●●	●●●	●●●	●●●●●	●●●●●
Low clearance height	●●●●●	●●●	●●●●	●●●●	●●●
Fill weight	●●	●●●●	●●●	●●●●●	●●●●●
Quiet, smooth operation	●●●●●	●●●●	●●●●	●●●●	●●●●
Online calculation of service life	X	X	X	X	√
Online interior separation configurator	X	√	√	X	√

●●●●● = Ideal
● = Less suitable
√ = yes / X = no

Certified energy chains for dry cleanrooms

Dry cleanroom with igus® e-chains®
Applications in very dry environments are constantly increasing, as battery production systems for the manufacture of lithium-ion batteries in particular require areas with a relative humidity of less than 1%. To guarantee error-free production and thus long battery life, the production process must be continuously optimised. A clean and low-particle environment is therefore also required.

That is why the Fraunhofer IPA has developed a new type of certificate to document the ISO cleanroom classification under dry room conditions in 2023. The igus® E6 e-chain® series is the very first cable guidance system to be certified by the IPA under dry room conditions. The E6.29.060.100.0 achieved the best possible result at the time: ISO Class 4*.

The e-chain® was tested in a dry cleanroom ISO Class 3 with a dew point of -40°C, which corresponds to a relative humidity of <1% at room temperature of 22°C.

Under these conditions, the triflex® TRC.40.058.0.ESD energy chain was certified in combination with the associated fibre-rod system. The system was specifically



designed for use on industrial robots to ensure a smooth and ideally contact-free production process. Here even as a version made of ESD material.

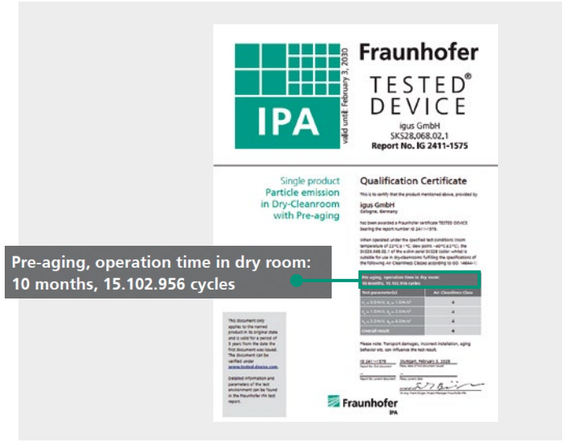

Certified cleanliness after continuous operation in the dry room
In January 2024, the service life and cleanliness of igus® energy chains were tested in the Fraunhofer IPA dry room. Over a period of more than 10 months, the e-chains® completed more than 15 million double strokes in continuous operation in the dry environment. Not only did the energy chains withstand this stress without any problems, but some even passed the test without losing any of their cleanliness.

Fraunhofer IPA has certified the SKS28.068.02.1 cleanroom energy supply system in accordance with ISO 4 cleanroom class ("with pre-aging", i.e. after completing continuous operation in the dry room).

Test certificates, seals of approval and memberships

Standards and certificates | Certifying

DIN EN ISO 9001:2016 and IATF 16949:2016
igus® is certified in accordance with DIN EN ISO 9001:2015 and IATF 16949:2016 in the field of energy supply systems, cables and harnessing, as well as plastic plain bearings.



ESD (Electro Static Discharge)
igus® energy chains are tested and certified by the ESD Academy. The material igumid® ESD combines the requirements according to ESD in its specifications and is recommended by igus® to avoid static charges in the area of the manufacturing processes of electronic components or assemblies ▶ **Page 76**.

ATEX (EU guideline on explosion protection)
According to a statement by TÜV Rheinland: 557/Ex125071309.00/17, igus® e-chains® do not fall under the scope of application of Directive 2014/34/EU ▶ **Page 77**.

IPA cleanroom and dry cleanroom
A lot of e-chains® are suitable for the use in cleanrooms according to DIN EN ISO 14644-1. Confirmed by the IPA Fraunhofer Institute ▶ **Page 78**. Energy chains in the dry cleanroom (especially in battery production) were also certified by IPA FRa etc. and tested ▶ **Page 80**.

UL, CSA, CEI and VDE
All igumid® materials for e-chains® and e-tubes have got the UL-material approval. Our standard materials have got the fire protection class approval UL94 HB. The material igumid® NB has got the fire protection class approval IIb according to the test VDE 0304 Part 3/5.70, the approval V2 according UL94 and the construction material class B2 according DIN 4102. The special materials igumid® G V0 GF and igumid® NB have the UL94-V0 fire classification.



igumid®
The material igumid® is free from toxins, according to 2015/863/EU (RoHS3).

Award-winning designs
Since 1987, 42 of our products have been honoured by "iF Forum Design GmbH" in the "Industry Design" category. The iF Design Award goes to especially innovative and attractive products. We have also been among the winners of the reddot and German Design Award several times. ▶ **www.igus.eu/iF**

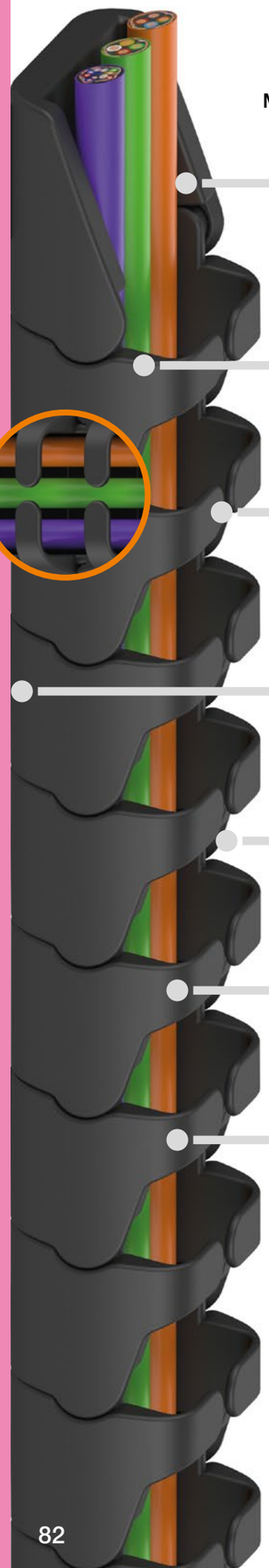

Mounting bracket screwed in place or fitted with a special rubber-coated magnet

Elegant and minimalist design, specially designed for the furniture industry

Save time: fast filling thanks to igus® easy design

Protected: closed on the outside for cable protection and concealment

Abrasion-optimised: cable-friendly due to smooth interior

Simple customisation: flexibly lengthen or shorten

Flammability class: UL94-V2

Simply functional - Office Chain OCO

Top design energy supply for moving desks.
Organised cable guidance is a must for mobile desks.With the OCO.32.37.0, it's a piece of cake.It also has a simple design that blends unobtrusively into any office.When straight, it is closed on one side, which makes for a visually simpler design. The one-piece construction with concealed pin/bore connection also ensures a tidy appearance.

Benefits

- Semi-enclosed design for an aesthetic appearance
- Quick filling and easy assembly thanks to igus® easy design
- Tested in the igus® laboratory

Typical application areas

- Office furniture
- Furniture construction
- IT systems

GERMAN DESIGN AWARD WINNER 2025

Selection table

Part No.	Inner height *hi* [mm]	Outer height *ha* [mm]	Inner width *Bi* [mm]	Outer width *Ba* [mm]	Bend radius *R* [mm]	Page
OCO with easy design - simply press cables in						
OCO.32	32	37	37	50	20	**84**

Technical data

General properties	
e-chain® and mounting bracket material - igumid® NB	-40°C / +80°C
Flammability class, igumid® NB	VDE 0304 IIC UL94-V2

More solutions for office and furniture

Award-winning design - OCR office e-chain®
- Movable in all axes, round and square versions
- Simply press in or pull out cables with easy design
- Mounting brackets with magnets for easy attachment in seconds
- Flexible, locking or both combined



Cable guidance for office and furniture - ZF office e-chain®
- Attractive, cable-friendly easy design
- Closed outer sides (half-tube)
- Easy to fill, even when installed
- Mounting brackets can be either screwed or bonded



Product range

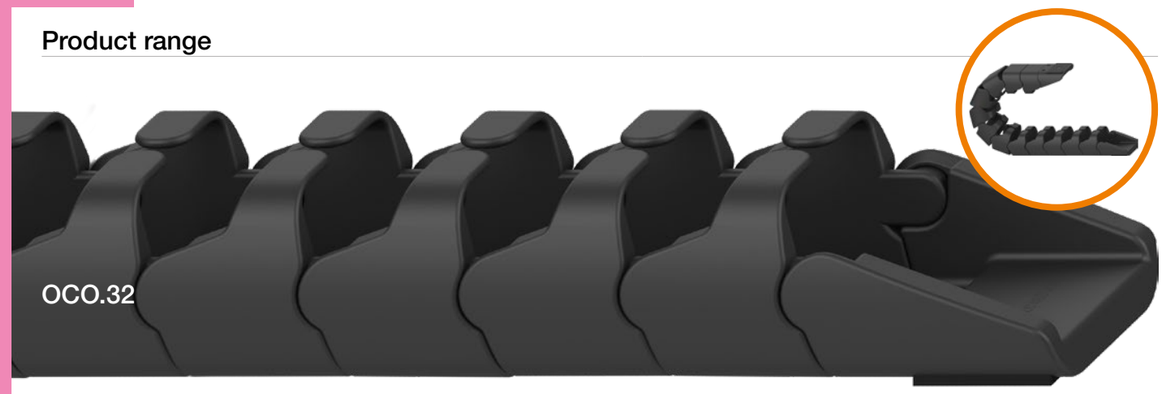

Part No. one-piece, non-openable	Inner width *Bi* [mm]	Outer width *Ba* [mm]	Weight [kg/m]
OCO.32.37.0	37	50	≈ 0.52
Bend radius *R* [mm] | 032 |			

Unsupported applications | Short travels

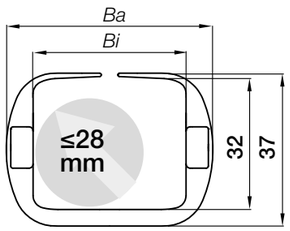

Inner height [mm]	32
Pitch [mm]	30
Links/m [pc.]	33
corresponds to [mm]	990
e-chain® length	$L_K = {}^{S}/_{2} + K$

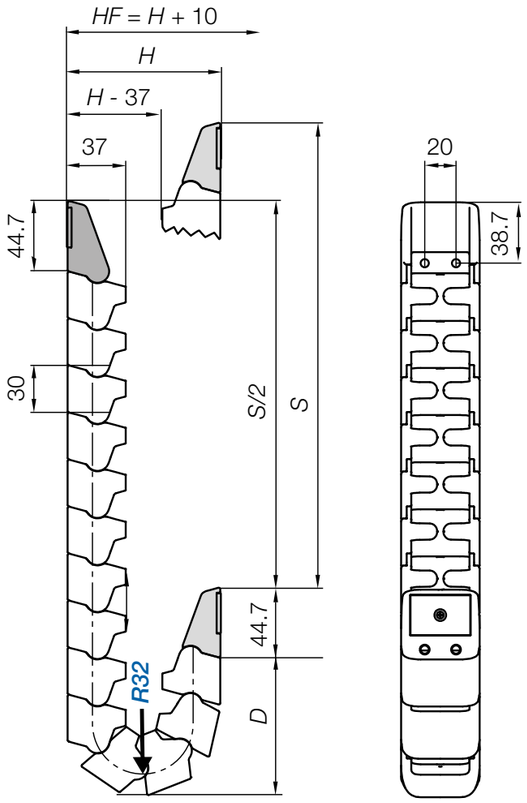

R	032
H	100
D	90
K	180

The required clearance height: $H_F = H + 10mm$

e-chain® order key

OCO.32.37.0

Series	Inner height	Width index	Colour index

Order example:
For 1.32m e-chain® 40 chain links
OCO.32.37.0 + 1 set mounting bracket **OCO.320.37.12**.
Order index for colour options
▶ **www.igus.eu/info-colours**

Available from stock
Upon request

Mounting brackets, plastic

Moving end
OCO.320.37.10

Fixed end
OCO.320.37.20

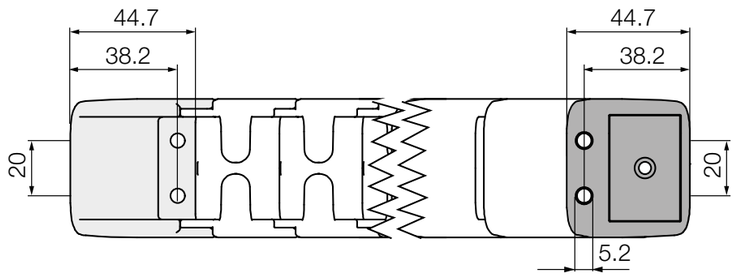

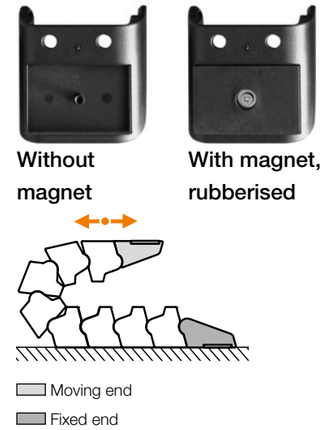

Width index	Part No. Full set Mounting bracket without magnet	Part No. Full set Mounting bracket with rubberised magnet
037.	OCO.320.37.12	OCO.320.37.12.MAG1

Mounting bracket order key

OCO.320.37.12

Series	Width index	Width index	Full set

Note: Possible variations for assembled mounting brackets.

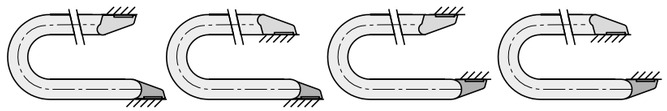

OCO.320.37.12 = mounting bracket, full set, with magnet

Available from stock
On request

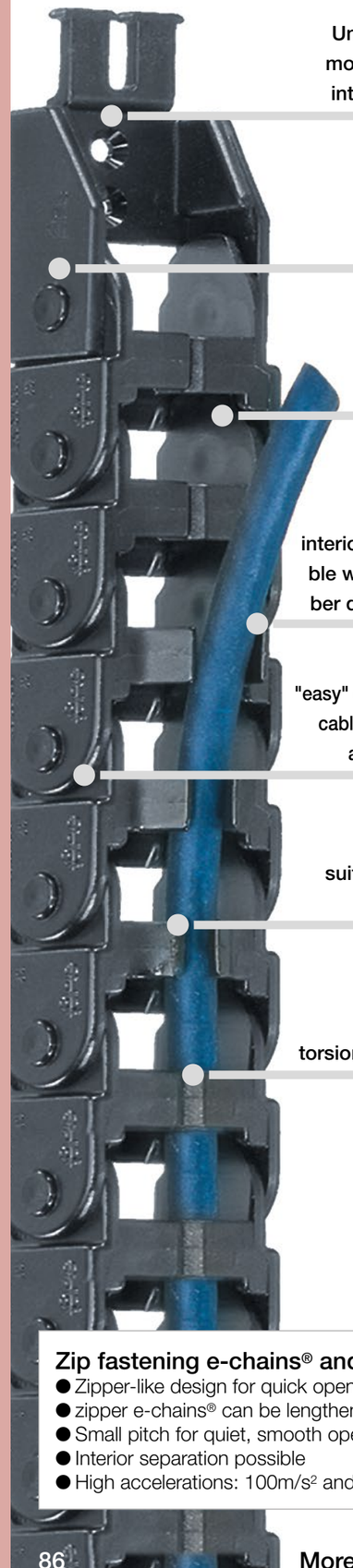

Universal connection: mounting bracket with integrated strain relief

Cost-effective: low price with one-piece design

Flexible: easy to lengthen and shorten at any point

Keep order: interior separation possible with moulded chamber design (some types)

Quick assembly: "easy" design - simply press cables in without opening and closing crossbars

Cleanroom: suitable for cleanroom applications

Flexible: torsional motion possible

Easy to fill and cost-effective - easy chain®

Cost-effective, easy to fill e-chains® are available in two versions. In the "E" version the cable is simply installed from the outside, and in the "Z" version from the inside. The primary reason to choose easy chains® is to save time when fitting cables. The material, igumid® NB, presents more application opportunities due to its flexibility, UL94-V2 classification and excellent cleanroom qualities. The one-piece design keeps the easy chain® very cost-effective.

Benefits

- Easy filling without opening and closing the lids
- If quiet running is required
- If a light and cost-effective e-chain® is required
- For high accelerations

Typical application areas

- Cleanrooms
- Electronic devices
- Office furniture
- Vending machines
- Packaging machines
- General machinery, etc.

Proof

Certified for cleanrooms, further details ▶ Page 78

Fraunhofer TESTED® DEVICE IPA igus energy chains/ linear bearings Report No. IG 0308-295

Zip fastening e-chains® and e-tubes - zipper

- Zipper-like design for quick opening and closing of lids
- zipper e-chains® can be lengthened and shortened at any point
- Small pitch for quiet, smooth operation
- Interior separation possible
- High accelerations: 100m/s² and more possible

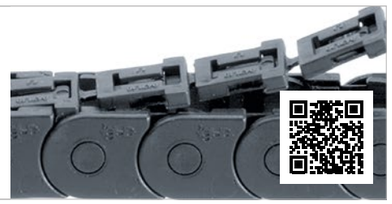

Selection table

Part No.	Inner height *hi* [mm]	Outer height *ha* [mm]	Inner width *Bi* [mm]	Outer width *Ba* [mm]	Bend radius *R* [mm]	Unsupported length ≤ [m]	Page
Version E with "easy" design - split crossbar along the outer radius							
E03	5	8	5 - 10	8.7 - 13.7	010 - 028	0.40	**88**
E04	7	10	7	13	015 - 048	0.55	**90**
E045	9.4	12.5	10 - 16	16 - 23	018 - 038	0.40	**92**
E06	10.7	15	10 - 20	16.5 - 26.5	018 - 038	0.55	**94**
E065	11.3	15	16	24.8	018 - 038	0.60	**96**
E08	14.6	19.3	10 - 50	18.2 - 58.2	028 - 048	1.00	**98**
E14	19	25	15 - 50	27 - 62	028 - 125	0.65	**100**
E200	24.3	35	57	74.4	055 - 200	1.75	**102**
E16	32	39	23 - 100	37.5 - 115.3	040 - 125	1.00	**104**
E26	36.5	50	75	92	063 - 250	2.00	**106**
E300	48.5	64	75	95	075 - 300	2.25	**108**
Version Z with "easy" design - split crossbar along the inner radius							
Z045	9.4	12.5	16	23	018 - 038	0.40	**92**
Z06	10.5	15	10 - 20	16.5 - 26.5	018 - 038	0.55	**94**
Z065	11.3	15	9	39.3	018 - 038	0.60	**96**
Z08	14.7	19.3	10 - 50	18.2 - 58.2	028 - 048	1.00	**98**
Z14	19	25	15 - 50	27 - 62	028 - 125	0.65	**100**
Z200	24.3	35	57	74.4	055 - 200	1.75	**102**
Z16	32	39	23 - 100	37.5 - 115.3	040 - 125	1.00	**104**
Z26	36.5	50	75	92	063 - 250	2.00	**106**
Z300	48.5	64	75	95	075 - 300	2.25	**108**

Technical data

General properties	igumid® NB	igumid® G LW
Speed gliding / acceleration gliding	≤ 3 [m/s] / ≤ 10 [m/s²]	–
Speed FL_G/acceleration FL_G	20 [m/s] / ≤ 200 [m/s²]	–
Speed FL_B/acceleration FL_B	≤ 3 [m/s] / ≤ 6 [m/s²]	–
e-chain® - permitted temperature °C	-40°C / +80°C	–
Mounting bracket - permitted temperature °C	possible upon request	-40°C/+120°C
Flammability class	VDE 0304 IIC UL94-V2	VDE 0304 IIC UL94-HB

Installation types, maximum travel lengths

Series	Unsupported	Vertical hanging	Vertical standing	Side mounted, unsupported	Rotary
E03	≤ 0.80m	upon request	upon request	upon request	with rework
E04	≤ 1.10m	upon request	upon request	upon request	with rework
E045/Z045	≤ 0.80m	upon request	upon request	upon request	with rework
E06/Z06	≤ 1.10m	upon request	upon request	upon request	with rework
E065/Z065	≤ 1.20m	upon request	upon request	upon request	with rework
E08/Z08	max. 2.00 m	upon request	upon request	upon request	with rework
E14/Z14	≤ 1.30m	upon request	upon request	upon request	with rework
E200/Z200	≤ 3.50m	≤ 10m	≤ 1.5m	≤ 0.5m	with rework
E16/Z16	≤ 4.00m	≤ 10m	≤ 1.5m	≤ 0.5m	with rework
E26/Z26	≤ 4.00m	≤ 10m	≤ 1.5m	≤ 0.5m	with rework
E300/Z300	≤ 4.50m	≤ 10m	≤ 1.5m	≤ 0.5m	with rework

Product range

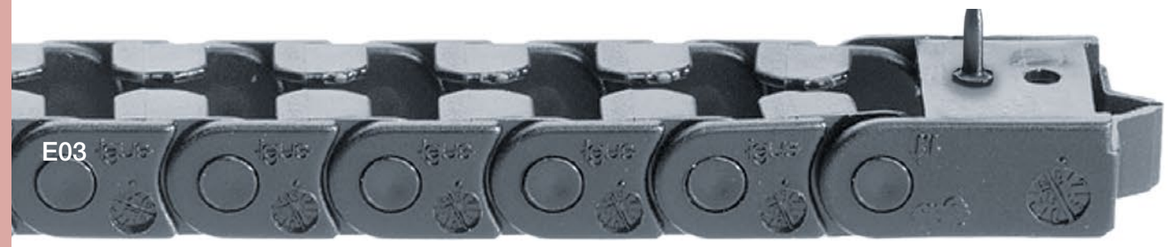

Part No. Version E - split crossbar along the outer radius	Inner width *Bi* [mm]	Outer width *Ba** [mm]	Weight [kg/m]
1-chamber design			
E03.05.□□.0[1]	5	8.7	≈ 0.03
E03.07.□□.0[2]	7	10.7	≈ 0.04
E03.10.□□.0[2]	10	13.7	≈ 0.05
Available bend radii *R* [mm] | 010 | 012 | 015 | 018 | 028 |			

Crossbars do not overlap: 1) Gap = 1mm, 2) Gap = 2mm.

***Ba**: pin dimension approx. 0.1 - 0.3mm wider.

Unsupported applications | Short travels

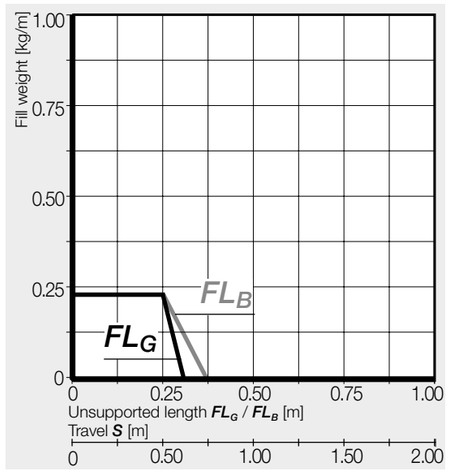

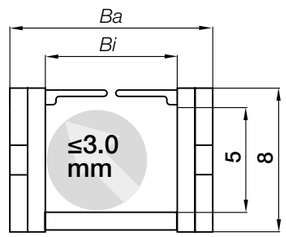

Inner height [mm]	**5**
Pitch [mm]	**10**
Links/m [pc.]	**100**
corresponds to [mm]	**1,000**
e-chain® length	$L_K = S/2 + K$

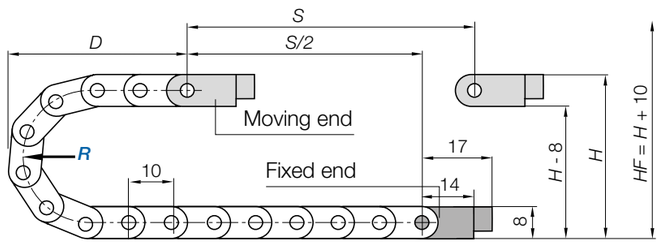

R	010	012	015	018	028
H	28	32	38	44	64
D	29	31	34	37	47
K	55	60	70	80	110

The required clearance height: $H_F = H + 10$mm (with 0.1kg/m fill weight)

Available from stock

Upon request

Mounting brackets, polymer one-piece | Pivoting

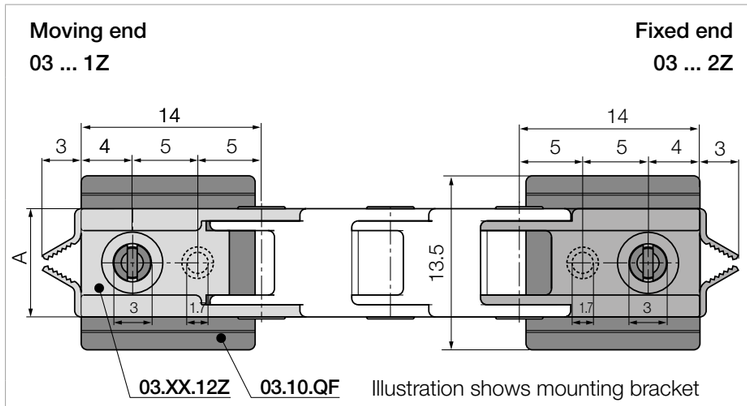

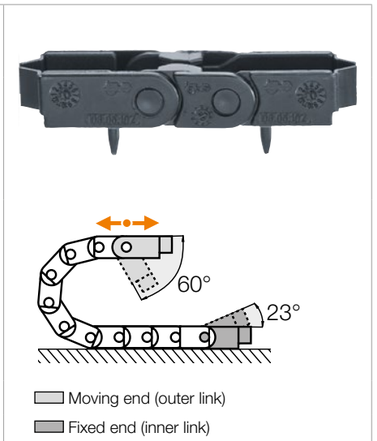

Width index	Part No. Full set Pivoting with tiewrap plates	A [mm]	Part No. Adapter plate Single part, optional
05.	**03.05.12Z**	8.4	**03.10.QF**
07.	**03.07.12Z**	10.4	**03.10.QF**
10.	**03.10.12Z**	13.4	**03.10.QF**

Additional features | Adapter plate

Adapter plate for rapid installation for all sizes. With scored lines so that it can be adapted to the respective e-chain® width. The adapter plate is not always necessary when attaching the mounting brackets as they can also be screwed on without the adapter plate.

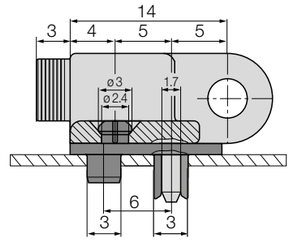

e-chain® order key

E03.05.028.0

Series | Width index | Bend radius | Colour index

Example:
Complete Part No. with the required radius □□. Example:
03.05.028.0 = "easy" design, split crossbar along the outer radius
Order index for colour options ▶ **www.igus.eu/info-colours**

Mounting bracket order key

03.05.12Z .A2

Series | Width index | Full set | With integrated strain relief tiewrap plates | Pre-fitted

Note: Possible variations for assembled mounting brackets.
To receive mounting brackets with **pre-fitted** option please add index **.A2** or **.A4**.

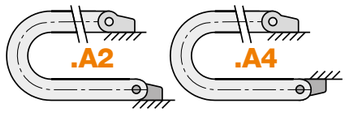

Product range



Part No. Version E - split crossbar along the outer radius	Inner width *Bi* [mm]	Outer width *Ba** [mm]	Weight [kg/m]
1-chamber design			
E04.07.□.0[1)]	7	13	≈ 0.08

Available bend radii *R* [mm] | 015 | 018 | 028 | 038 | 048 |

Crossbars do not overlap: 1) Gap = 2.5mm.

Special solution with narrow opening gap: Gap = 0.8mm, **Part No. E04.07.015.0.S**.

Ba: pin dimension approx. 0.1 - 0.3mm wider.

Unsupported applications | Short travels

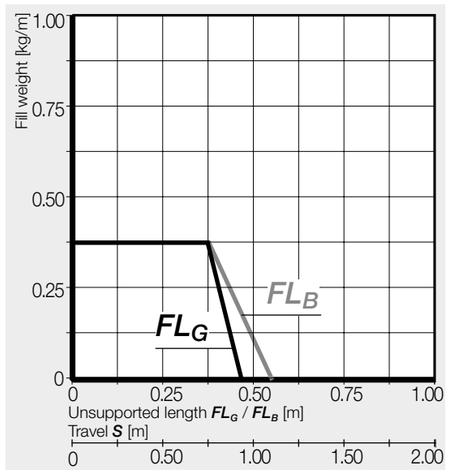

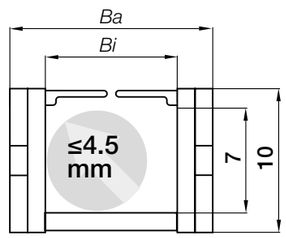

Inner height [mm]	7
Pitch [mm]	16.7
Links/m [pc.]	60
corresponds to [mm]	1,002
e-chain® length	$L_K = S/2 + K$

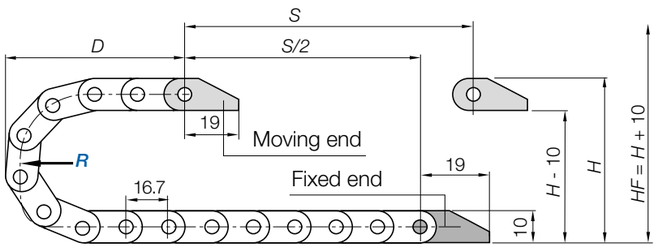

R	015	018	028	038	048
H	40	46	66	86	106
D	45	48	58	68	78
K	85	90	125	155	185

The required clearance height: $H_F = H + 10$mm (with 0.1kg/m fill weight)

Available from stock

Upon request

Mounting brackets, polymer one-piece | Pivoting

Moving end
040 ... 1(PZ)

Fixed end
040 ... 2(PZ)

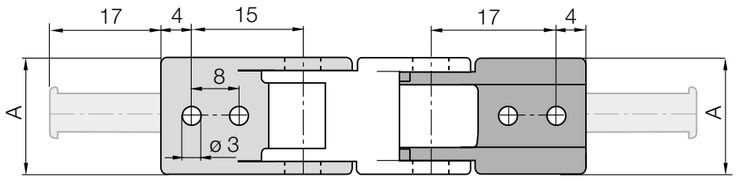

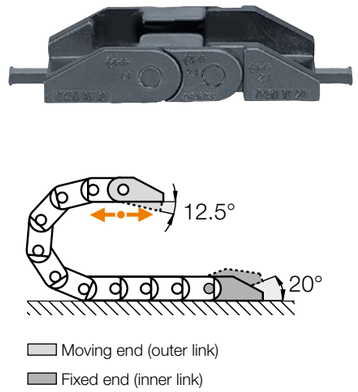

Width index	Part No. Full set Pivoting with tiewrap plates*	Part No. Full set Pivoting without tiewrap plates**	A [mm]	Number of teeth
07.	**040.07.12PZ**[1)]	**040.07.12**	12	1

1) 040.07.12PZ only installation versions A2 and A4 possible.

*Countersink ø 3mm / **Only holes of ø 3mm.

e-chain® order key

E04.07.015.0

Series | Width index | Bend radius | Colour index

Example:
Complete Part No. with the required radius □. Example:
E04.07.015.0 = "easy" design, split crossbar along the outer radius
Order index for colour options ▶ **www.igus.eu/info-colours**

Mounting bracket order key

040.07.12PZ .A2

Series | Width index | Full set | With integrated strain relief tiewrap plates | Pre-fitted

Note: Possible variations for assembled mounting brackets. To receive mounting brackets with **pre-fitted** option please add index **.A1**, **.A2**, **.A3** or **.A4**.

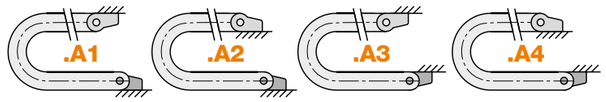

Available from stock

Upon request

Product range

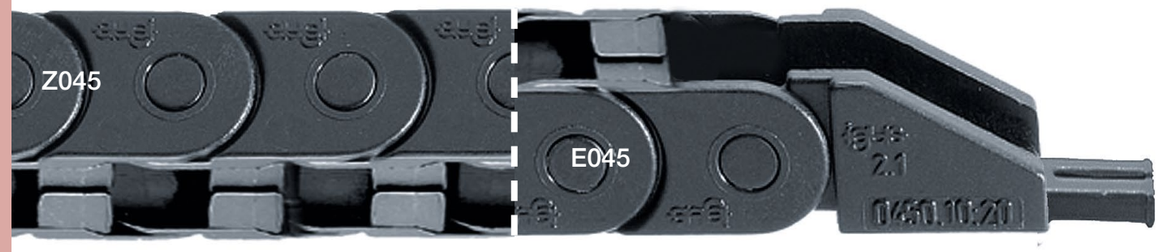

Part No. Version E - split crossbar along the outer radius	Part No. Version Z - split crossbar along the inner radius	Inner width *Bi* [mm]	Outer width *Ba** [mm]	Weight [kg/m]
1-chamber design				
E045.10.□□.0[1]	–	10	16	≈ 0.09
E045.16.□□.0	**Z045.16.□□.0**	16	23	≈ 0.11
2-chamber design				
E045.2/7.□□.0[2]	**Z045.2/7.□□.0**[2]	7/7	23	≈ 0.13
E045.2/9.□□.0[2]	–	9/9	27	≈ 0.14
3-chamber design				
E045.3/9.□□.0[2]	–	9/9/9	37	≈ 0.17

Available bend radii *R* [mm] | 018 | 028 | 038 |

Crossbars do not overlap: 1) Gap = 2mm, 2) Gap = 2.25mm.

Ba: pin dimension approx. 0.5mm - 1.0mm wider.

Unsupported applications | Short travels

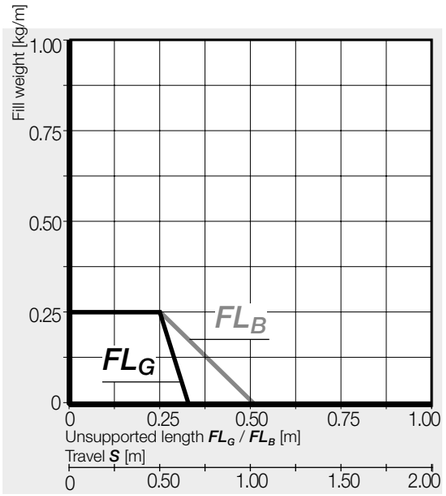

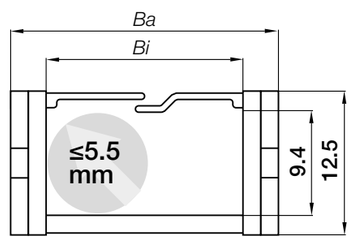

Inner height [mm]	**9.4**
Pitch [mm]	**13**
Links/m [pc.]	**77**
corresponds to [mm]	**1,001**
e-chain® length	$L_K = S/2 + K$

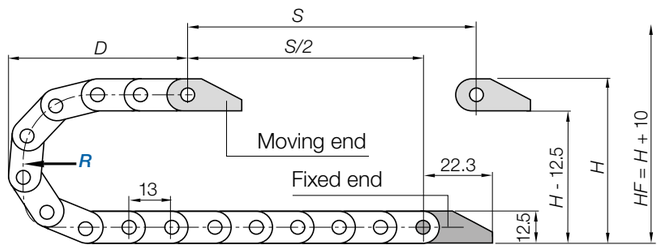

R	018	028	038
H	48.5	68.5	88.5
D	44	54	64
K	85	115	150

The required clearance height: $H_F = H + 10mm$ (with 0.1kg/m fill weight)

Mounting brackets, polymer one-piece | One end pivoting

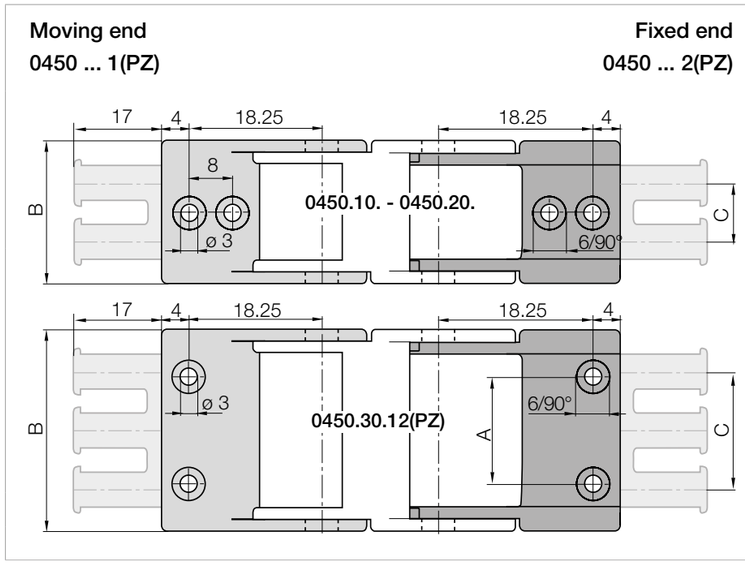



Hole pattern for part numbers **0450.10 - 0450.20.**
= drawing above left
Hole pattern for part number **0450.30.**
= drawing below left

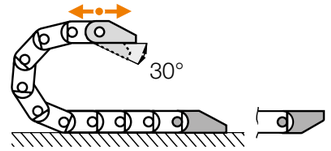

Moving end (outer link)
Fixed end (inner link)

Width index	Part No. Full set One end pivoting with tiewrap plates*	Part No. Full set One end pivoting without tiewrap plates**	A [mm]	B [mm]	C [mm]	Number of teeth
10.	**0450.10.12PZ**	**0450.10.12**	–	16	–	1
16.	**0450.16.12PZ**	**0450.16.12**	–	22	10	2
2/7.	**0450.16.12PZ**	**0450.16.12**	–	22	10	2
2/9.	**0450.20.12PZ**	**0450.20.12**	–	26	10	2
3/9.	**0450.30.12PZ**	**0450.30.12**	22	36	20	3

*Countersink Ø 3mm / ø 6mm 90° / **Only holes of Ø 3mm.

e-chain® order key

E045.16.038.0

Series | Width index | Bend radius | Colour index

Example:
Complete Part No. with the required radius □ ***R***. **Example:**
E045.16.038.0 = "easy" design, split crossbar along the outer radius
Order index for colour options ▶ **www.igus.eu/info-colours**

Mounting bracket order key

0450.16.12PZ .A2

Series | Width index | Full set | With integrated strain relief tiewrap plates | Pre-fitted

Note: Possible variations for assembled mounting brackets.
To receive mounting brackets with **pre-fitted** option please add index **.A2** or **.A4**.

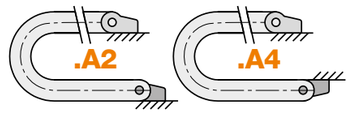

Product range



Part No. Version E - split crossbar along the outer radius	Part No. Version Z - split crossbar along the inner radius	Inner width *Bi* [mm]	Outer width *Ba** [mm]	Weight [kg/m]
1-chamber design				
E06.10.□.0[1)]	**Z06.10.□.0**[1)]	10	16.5	≈ 0.14
E06.16.□.0[1)]	**Z06.16.□.0**[1)]	16	22.5	≈ 0.16
E06.20.□.0	**Z06.20.□.0**	20	26.5	≈ 0.18
Available bend radii *R* [mm] | 018 | 028 | 038 |				

Crossbars do not overlap: 1) Gap = 5.5mm.

Special solution with narrow opening gap: Gap = 3.5mm, **Part No. E06.10.018.0.S**.

Ba*: pin dimension approx. 1.5mm - 2.0mm wider.

Unsupported applications | Short travels

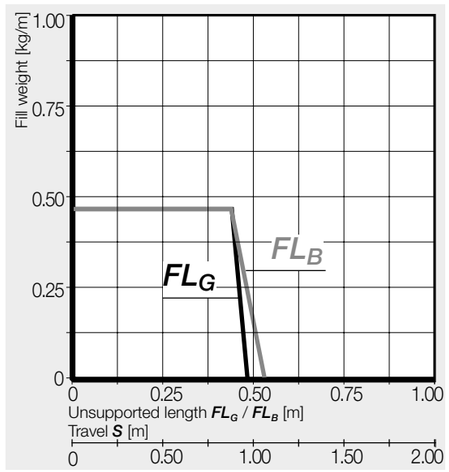

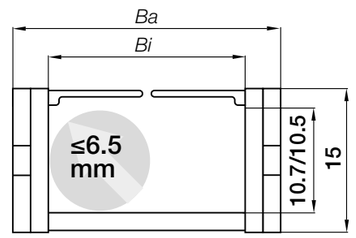

E06 inner height [mm]	**10.7**
Z06 inner height [mm]	**10.5**
Pitch [mm]	**20**
Links/m [pc.]	**50**
corresponds to [mm]	**1,000**
e-chain® length	$L_K = S/2 + K$

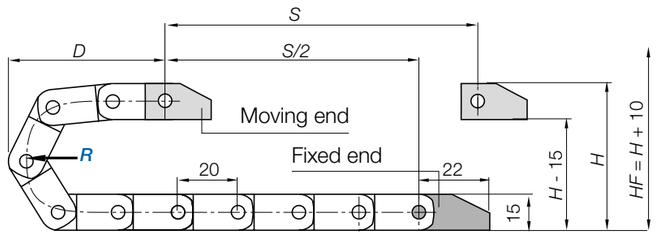

R	018	028	038
H	51	71	91
D	56	66	76
K	100	130	160

The required clearance height: $H_F = H$ **+ 10mm** (with 0.2kg/m fill weight)

Available from stock

Upon request

Mounting brackets, polymer one-piece | Locking

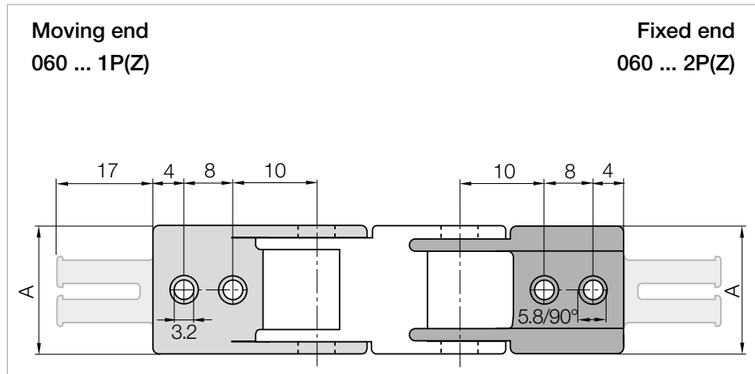

Width index	Part No. Full set Locking with tiewrap plates	Part No. Full set Locking without tiewrap plates	A [mm]	Number of teeth
10.	**060.10.12PZ**	**060.10.12**	16.5	1
16.	**060.16.12PZ**	**060.16.12**	22.5	2
20.	**060.20.12PZ**	**060.20.12**	27.0	2

e-chain® order key

E06.10.028.0

Series | Width index | Bend radius | Colour index

Example:

Complete Part No. with the required radius R. Example:

E06.10.028.0 = "easy" design, split crossbar along the outer radius

Order index for colour options ▶ **www.igus.eu/info-colours**

Mounting bracket order key

060.10.12PZ.A2

Series | Width index | Full set | With integrated strain relief tiewrap plates | Pre-fitted

Note: Possible variations for assembled mounting brackets. To receive mounting brackets with **pre-fitted** option please add index **.A1**, **.A2**, **.A3** or **.A4**.

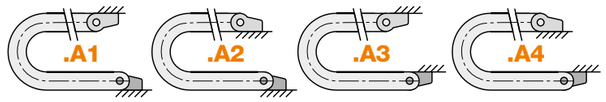

Available from stock

Upon request

Product range

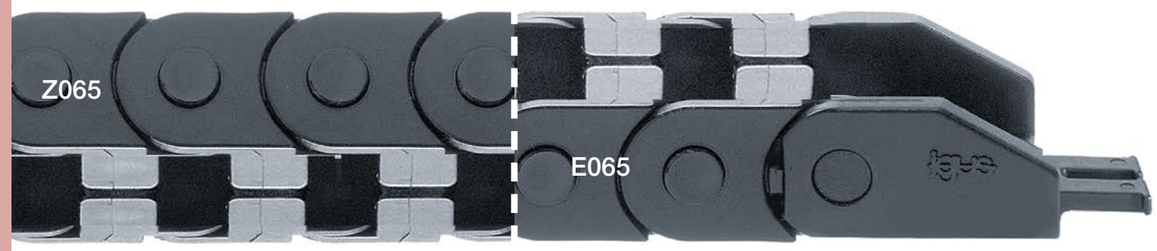

Part No. Version E - split crossbar along the outer radius	Part No. Version Z - split crossbar along the inner radius	Inner width *Bi* [mm]	Outer width *Ba** [mm]	Weight [kg/m]
1-chamber design				
E065.16.□□.0[1)]	–	16	24.8	≈ 0.17
2-chamber design				
E065.2/9.□□.0[1)]	–	9/9	29.3	≈ 0.19
3-chamber design				
E065.3/9.□□.0[1)]	**Z065.3/9.□□.0**[1)]	9/9/9	39.3	≈ 0.22
4-chamber design				
E065.4/9.□□.0[1)]	–	9/9/9/9	49.3	≈ 0.25

Available bend radii *R* [mm] | 018 | 028 | 038 |

Crossbars do not overlap: 1) Gap = 2.5mm.

***Ba**: pin dimension approx. 1.0mm - 1.6mm wider.

Unsupported applications | Short travels

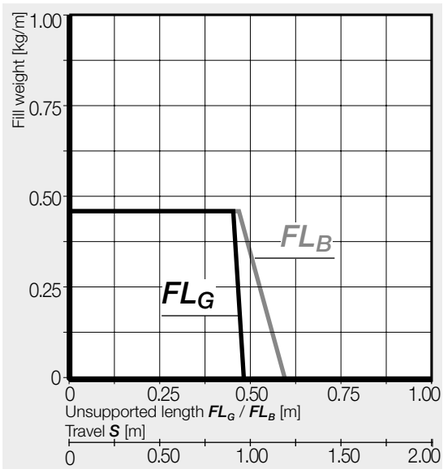

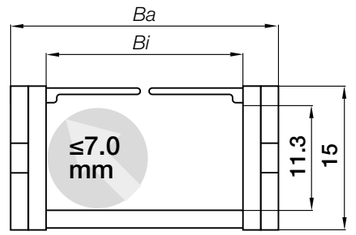

Inner height [mm]	11.3
Pitch [mm]	15
Links/m [pc.]	67
corresponds to [mm]	1,005
e-chain® length	$L_K = S/2 + K$

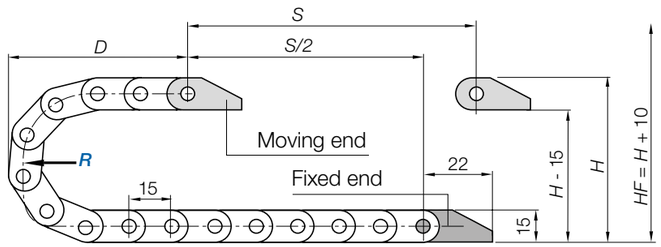

R	018	028	038
H	51	71	91
D	48	58	68
K	90	120	150

The required clearance height: $H_F = H + 10mm$ (with 0.2kg/m fill weight)

Mounting brackets, polymer one-piece | Locking

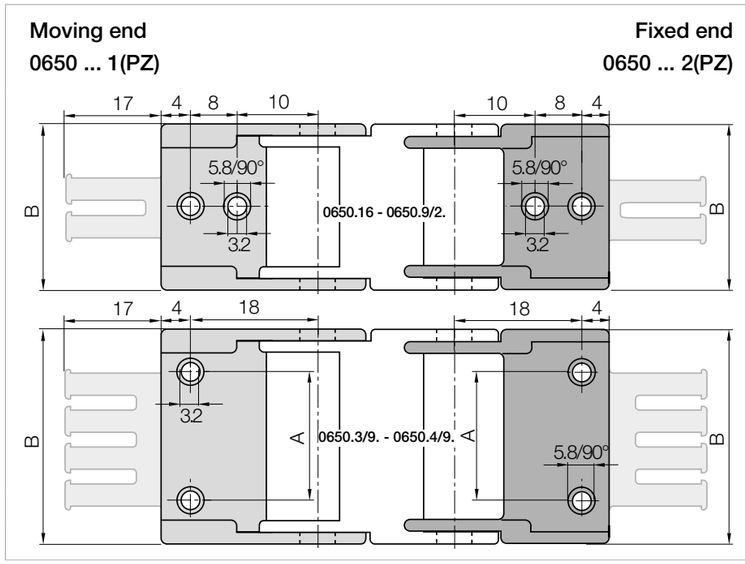

Hole pattern for part numbers **0650.16 - 0650.9/2.**
= drawing above left
Hole pattern for part numbers **0650.3/9. - 0650.4/9.**
= drawing below left

Width index	Part No. Full set Locking with tiewrap plates	Part No. Full set Locking without tiewrap plates	A [mm]	B [mm]	Number of teeth
16.	**0650.16.12PZ**	**0650.16.12**	–	22.5	2
2/9.	**0650.2/9.12PZ**	**0650.2/9.12**	–	27	2
3/9.	**0650.3/9.12PZ**	**0650.3/9.12**	22	37	3
4/9.	**0650.4/9.12PZ**	**0650.4/9.12**	32	47	4

e-chain® order key

E065.16.038.0

Series | Width index | Bend radius | Colour index

Example:
Complete Part No. with the required radius R. Example:
E065.16.038.0 = "easy" design, split crossbar along the outer radius
Order index for colour options ▶ **www.igus.eu/info-colours**

Mounting bracket order key

0650.16.12PZ .A2

Series | Width index | Full set | With integrated strain relief tiewrap plates | Pre-fitted

Note: Possible variations for assembled mounting brackets. To receive mounting brackets with **pre-fitted** option please add index **.A1**, **.A2**, **.A3** or **.A4**.

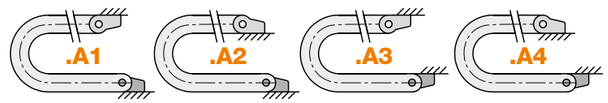

Available from stock
Upon request

Product range

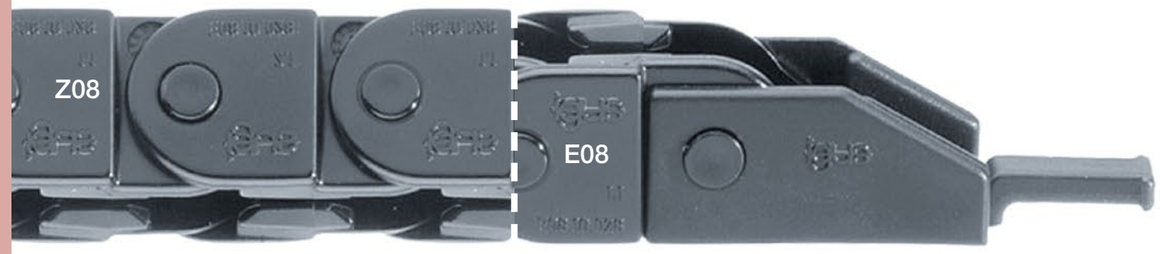

Part No. Version E - split crossbar along the outer radius	Part No. Version Z - split crossbar along the inner radius	Inner width *Bi* [mm]	Outer width *Ba** [mm]	Weight [kg/m]
1-chamber design				
E08.10.□□.0[1]	**Z08.10.□□.0**[1]	10	18.2	≈ 0.21
E08.16.□□.0[2]	**Z08.16.□□.0**[2]	16	24.2	≈ 0.24
E08.20.□□.0	**Z08.20.□□.0**	20	28.2	≈ 0.25
E08.30.□□.0	**Z08.30.□□.0**	30	38.2	≈ 0.28
E08.40.□□.0	**Z08.40.□□.0**	40	48.2	≈ 0.31
E08.50.□□.0	**Z08.50.□□.0**	50	58.2	≈ 0.37
Available bend radii *R* [mm] | 028 | 038 | 048 |				

Crossbars do not overlap: 1) Gap = 5.5mm, 2) Gap = 4.0mm.

Ba**: pin dimension approx. 1.4mm - 1.8mm wider.

Unsupported applications | Short travels

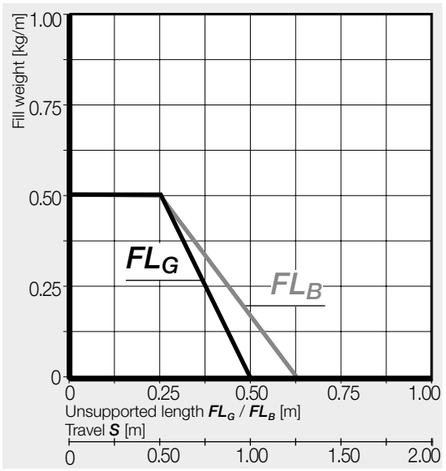

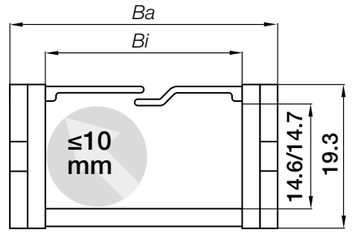

E08 inner height [mm]	**14.6**
Z08 inner height [mm]	**14.7**
Pitch [mm]	**20**
Links/m [pc.]	**50**
corresponds to [mm]	**1,000**
e-chain® length	$L_K = S/2 + K$

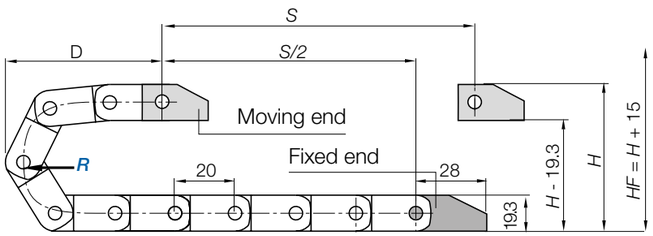

R	028	038	048
H	75	95	115
D	68	78	88
K	130	160	195

The required clearance height: $H_F = H + 15mm$ (with 0.3kg/m fill weight)

Mounting brackets, polymer one-piece | Locking

Moving end
080 ... 1P(Z)

Fixed end
080 ... 2P(Z)

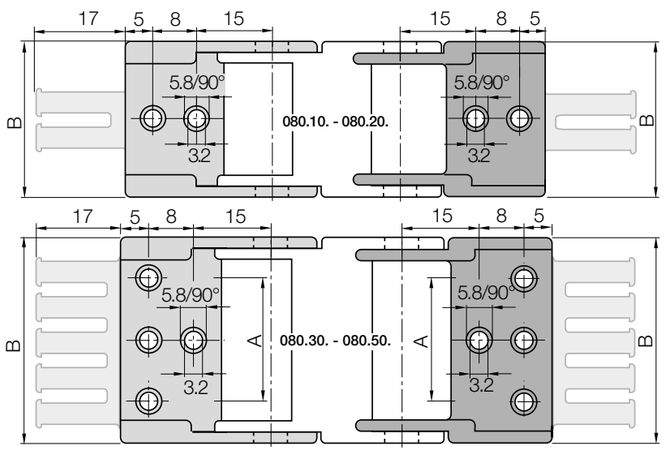



Hole pattern for part numbers **080.10. - 080.20.**
= drawing above left
Hole pattern for part numbers **080.30. - 080.50.**
= drawing below left

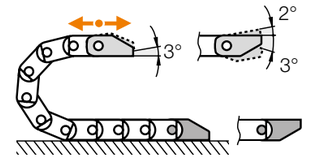

Moving end (outer link)
Fixed end (inner link)

Width index	Part No. Full set Locking with tiewrap plates	Part No. Full set Locking without tiewrap plates	A [mm]	B [mm]	Number of teeth
10.	**080.10.12PZ**	**080.10.12**	–	18.2	1
16.	**080.16.12PZ**	**080.16.12**	–	24.2	2
20.	**080.20.12PZ***	**080.20.12**	–	28.2	2
30.	**080.30.12PZ**	**080.30.12**	22	38.2	3
40.	**080.40.12PZ**	**080.40.12**	32	48.2	4
50.	**080.50.12PZ**	**080.50.12**	42	58.2	5

*080.20.12PZ the tiewrap plate is 14mm-long.

e-chain® order key

E08.10.028.0

Series | Width index | Bend radius | Colour index

Example:
Complete Part No. with the required radius □. Example:
E08.10.028.0 = "easy" design, split crossbar along the outer radius
Order index for colour options ▶ **www.igus.eu/info-colours**

Mounting bracket order key

080.10.12PZ.A2

Series | Width index | Full set | With integrated strain relief tiewrap plates | Pre-fitted

Note: Possible variations for assembled mounting brackets. To receive mounting brackets with **pre-fitted** option please add index **.A1**, **.A2**, **.A3** or **.A4**.

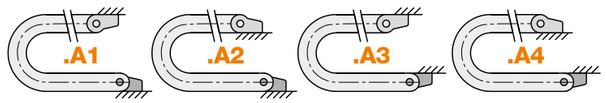

Product range

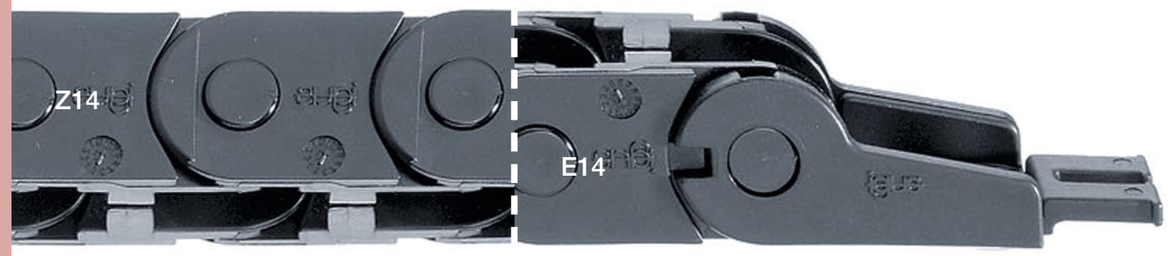

Part No. Version E - split crossbar along the outer radius	Part No. Version Z - split crossbar along the inner radius	Inner width *Bi* [mm]	Outer width *Ba* [mm]	Weight [kg/m]
1-chamber design				
E14.1.□.0	Z14.1.□.0	15	27	≈ 0.31
E14.2.□.0	Z14.2.□.0	25	37	≈ 0.32
E14.3.□.0	Z14.3.□.0	38	50	≈ 0.40
E14.4.□.0	Z14.4.□.0	50	62	≈ 0.44
Available bend radii *R* [mm] | 028 | 038 | 048 | 075 | 100 | 125 |				

Unsupported applications | Short travels

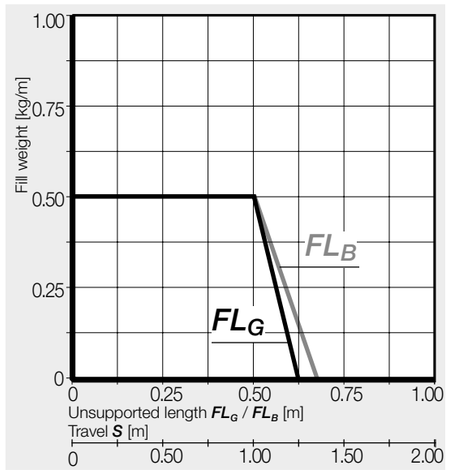

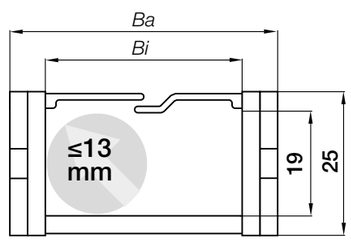

Inner height [mm]	19
Pitch [mm]	30.5
Links/m [pc.]	33
corresponds to [mm]	1,006.5
e-chain® length	$L_K = S/2 + K$

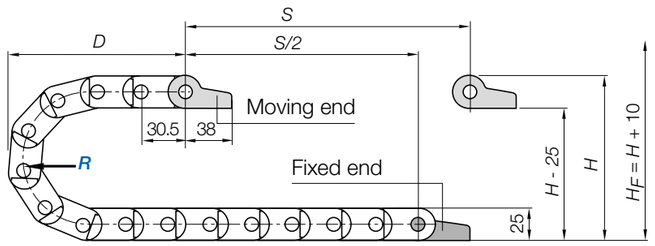

R	028	038	048	075	100	125
H	81	101	121	175	225	275
D	86	96	106	133	158	183
K	150	185	215	300	380	455

The required clearance height: $H_F = H + 10$mm (with 0.2kg/m fill weight)

Available from stock
Upon request

Mounting brackets, polymer one-piece | Locking

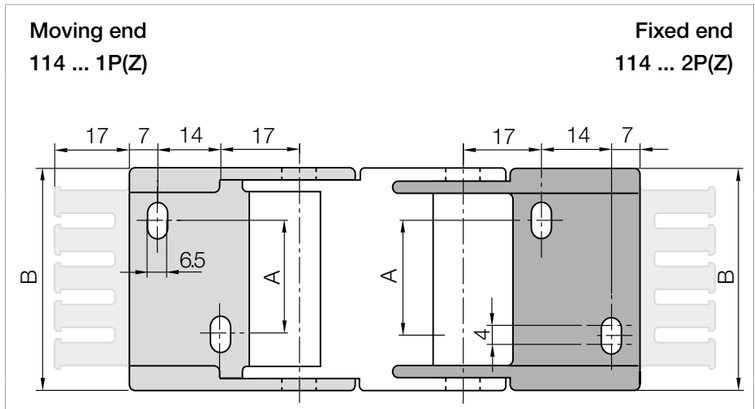

Width index	Part No. Full set Locking with tiewrap plates	Part No. Full set Locking without tiewrap plates	A [mm]	B [mm]	Number of teeth
1.	114.1.12PZ	114.1.12P	–	26.3	2
2.	114.2.12PZ	114.2.12P	10	36.3	3
3.	114.3.12PZ	114.3.12P	23	49.3	4
4.	114.4.12PZ	114.4.12P	35	61.3	5

e-chain® order key

E14.1.028.0

Series | Width index | Bend radius | Colour index

Example:
Complete Part No. with the required radius □. Example:
E14.1.028.0 = "easy" design, split crossbar along the outer radius
Order index for colour options ▶ **www.igus.eu/info-colours**

Mounting bracket order key

114.1.12PZ.A2

Series | Width index | Full set | With integrated strain relief tiewrap plates | Pre-fitted

Note: Possible variations for assembled mounting brackets. To receive mounting brackets with **pre-fitted** option please add index **.A1**, **.A2**, **.A3** or **.A4**.

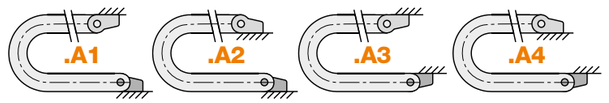

Available from stock
Upon request

Product range

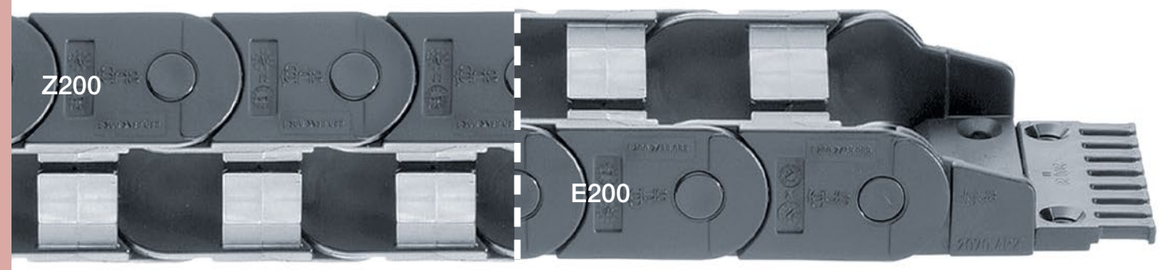

Part No. Version E - split crossbar along the outer radius	Part No. Version Z - split crossbar along the inner radius	Inner width *Bi* [mm]	Outer width *Ba* [mm]	Weight [kg/m]
1-chamber design				
E200.05.□□.0	Z200.05.□□.0	57	74.4	≈ 0.70
2-chamber design				
E200.2/35.□□.0	Z200.2/35.□□.0	37/37	94.4	≈ 0.79
E200.2/50.□□.0	Z200.2/50.□□.0	50/50	120.4	≈ 0.82
Available bend radii *R* [mm] | 055 | 075 | 100 | 150 | 200 |				

Unsupported applications | Short travels

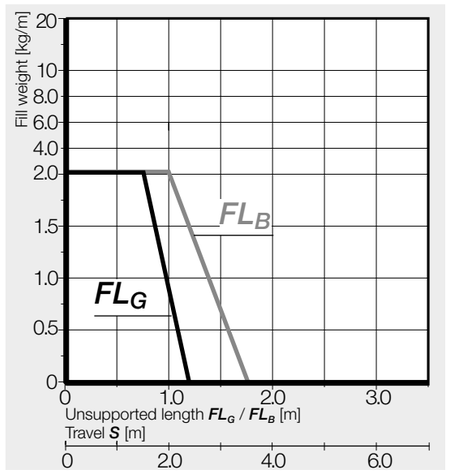

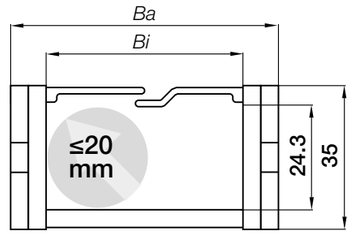

Inner height [mm]	24.3
Pitch [mm]	46
Links/m [pc.]	22
corresponds to [mm]	1,012
e-chain® length	$L_K = S/2 + K$

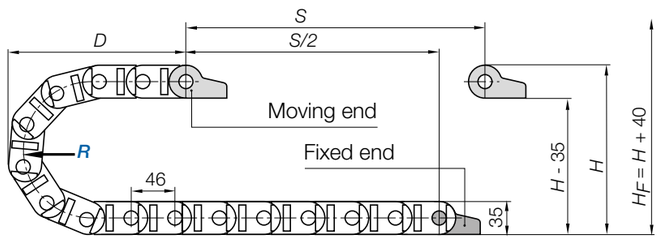

R	055	075	100	150	200
H^{+4}	145	185	235	335	435
D	142	162	187	237	287
K	265	330	410	565	725

The required clearance height: $H_F = H + 40$mm (with 2.0kg/m fill weight)

Available from stock
Upon request

Mounting brackets, polymer | Pivoting | Locking

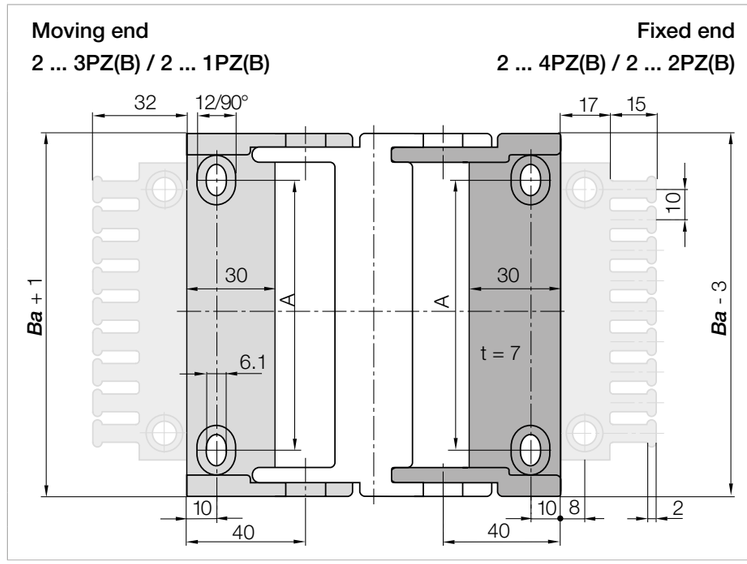

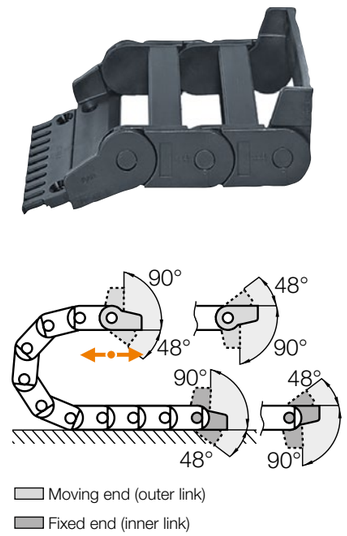

Width index	Part No. Full set Pivoting with tiewrap plates	Pivoting without tiewrap plates	Locking with tiewrap plates	Locking without tiewrap plates	A [mm]	Number of teeth
05.	2050.34PZB	2050.34PZ	2050.12PZB	2050.12PZ	44	6
2/35.	2070.34PZB	2070.34PZ	2070.12PZB	2070.12PZ	64	8
2/50.	2100.34PZB	2100.34PZ	2100.12PZB	2100.12PZ	90	10

Full set with tiewrap plate + 10 cable tiewraps, please add index **K1**. Example: **Part No. 2050.34PZBK1**.

e-chain® order key

E200.05.150.0

Series	Width index	Bend radius	Colour index

Example:
Complete Part No. with the required radius □. Example:
E200.05.150.0 = "easy" design, split crossbar along the outer radius
Order index for colour options ▶ **www.igus.eu/info-colours**

Mounting bracket order key

2050.34PZ.A2

Series	Full set	With integrated strain relief tiewrap plates	Pre-fitted

Note: Possible variations for assembled mounting brackets. To receive mounting brackets with **pre-fitted** option please add index **.A1**, **.A2**, **.A3** or **.A4**.

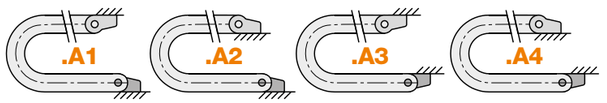

Available from stock
Upon request

Product range

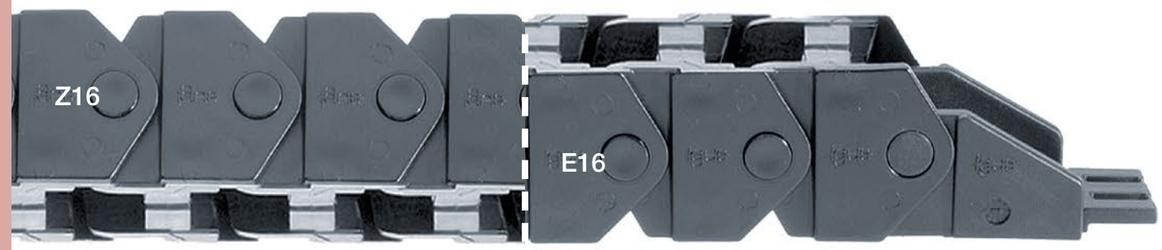

Part No. Version E - split crossbar along the outer radius	Part No. Version Z - split crossbar along the inner radius	Inner width *Bi* [mm]	Outer width *Ba* [mm]	Weight [kg/m]
1-chamber design				
E16.2.□.0	**Z16.2.□.0**	23	37.5	≈ 0.51
E16.3.□.0	**Z16.3.□.0**	36	50.5	≈ 0.57
E16.4.□.0	**Z16.4.□.0**	48	62.5	≈ 0.62
E16.5.□.0	**Z16.5.□.0**	63	78.5	≈ 0.75
E16.6.□.0	**Z16.6.□.0**	80	95.5	≈ 0.83
E16.7.□.0	**Z16.7.□.0**	100	115.3	≈ 0.91
Available bend radii *R* [mm] | 040[1] | 060 | 075 | 100 | 125[2] |				

1) Radius 040 only available for E16.2, Z16.3, Z16.4, Z16.6.

2) Radius 125 only available for E16.2/Z16.2, E16.3/Z16.3, E16.7/Z16.7.

Special solution with narrow opening gap: Gap = 3.0mm, **Part No. E16.2.100.0.N3 / Z16.2.075.0.N3**.

Unsupported applications | Short travels

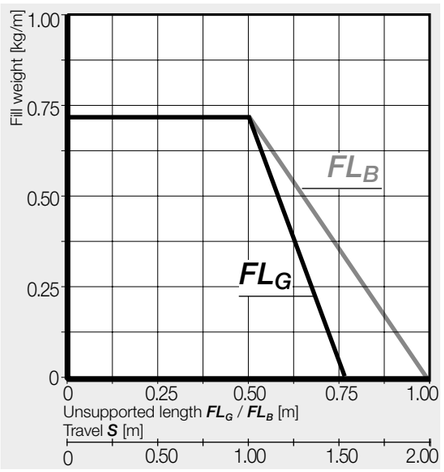

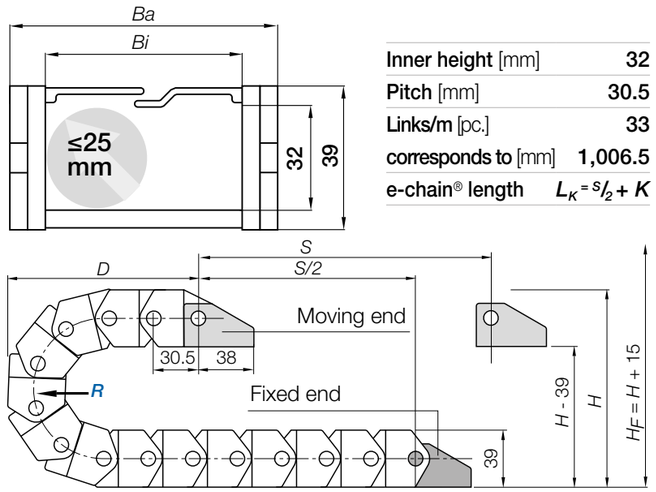

Inner height [mm]	**32**
Pitch [mm]	**30.5**
Links/m [pc.]	**33**
corresponds to [mm]	**1,006.5**
e-chain® length	$L_K = S/2 + K$

R	040[1]	060	075	100	125[2]
H	119	159	189	239	289
D	105	125	140	165	190
K	190	250	300	380	455

The required clearance height: $H_F = H + 15mm$ (with 0.3kg/m fill weight)

Mounting brackets, polymer one-piece | Locking

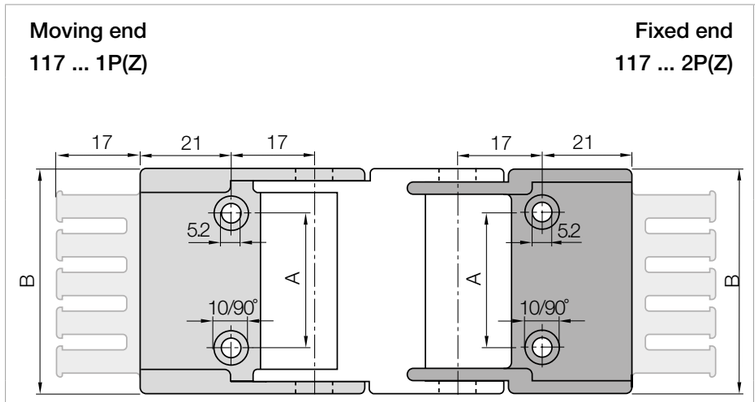

Width index	Part No. Full set Locking with tiewrap plates	Part No. Full set Locking without tiewrap plates	A [mm]	B [mm]	Number of teeth
2.	**117.2.12PZ**	**117.2.12P**	12	35.5	3
3.	**117.3.12PZ**	**117.3.12P**	25	48.5	4
4.	**117.4.12PZ**	**117.4.12P**	37	60.5	5
5.	**117.5.12PZ**	**117.5.12P**	48	76.0	6
6.	**117.6.12PZ**	**117.6.12P**	65	93.0	8
7.	**117.7.12PZ**	**117.7.12P**	85	113.0	10

e-chain® order key

E16.7.100.0

Series | Width index | Bend radius | Colour index

Example:
Complete Part No. with the required radius □. Example:
E16.7.100.0 = "easy" design, split crossbar along the outer radius
Order index for colour options ▶ **www.igus.eu/info-colours**

Mounting bracket order key

117.7.12PZ.A2

Series | Width index | Full set | With integrated strain relief tiewrap plates | Pre-fitted

Note: Possible variations for assembled mounting brackets. To receive mounting brackets with **pre-fitted** option please add index **.A1**, **.A2**, **.A3** or **.A4**.

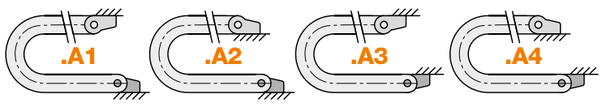

Available from stock
Upon request

Product range

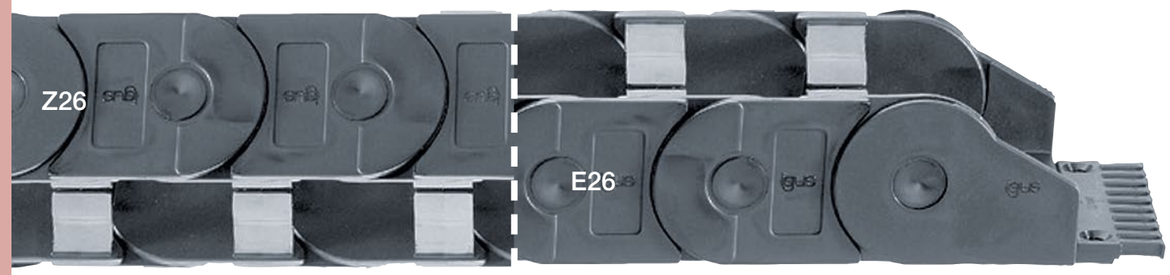

Part No. Version E - split crossbar along the outer radius	Part No. Version Z - split crossbar along the inner radius	Inner width *Bi* [mm]	Outer width *Ba* [mm]	Weight [kg/m]
1-chamber design				
E26.07.□.0	**Z26.07.□.0**	75	92	≈ 0.96
2-chamber design				
E26.2/45.□.0	**Z26.2/45.□.0**	48/48	117	≈ 1.14
3-chamber design				
E26.3/45.□.0	**EZ26.3/45.□.0**	47/48/47	167	≈ 1.30

Available bend radii *R* [mm] | 063 | 075 | 100 | 125 | 150 | 175 | 200 | 250 |

Unsupported applications | Short travels

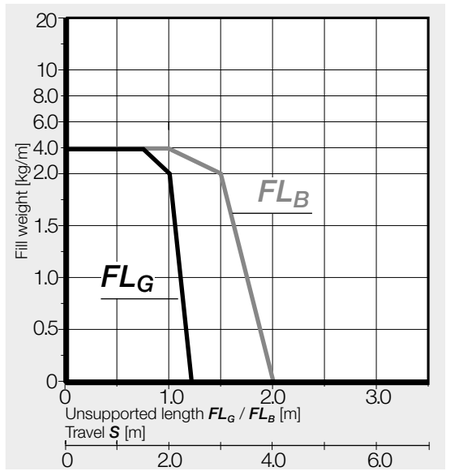

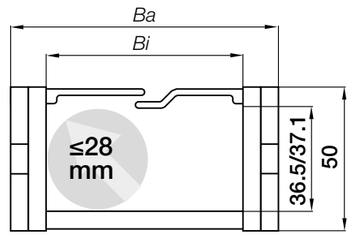

Inner height [mm]	
1-chamber	36.5
2 & 3-chamber	37.1
Pitch [mm]	56
Links/m [pc.]	18
corresponds to [mm]	1,008
e-chain® length	$L_K = S/2 + K$

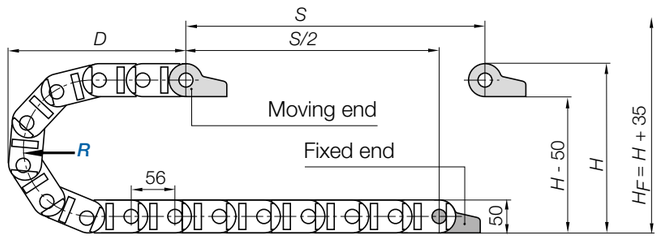

R	063	075	100	125	150	175	200	250
H+5	176	200	250	300	350	400	450	550
D	172	184	209	234	259	284	309	359
K	310	350	430	505	585	665	745	900

The required clearance height: $H_F = H + 35$mm (with 2.0kg/m fill weight)

Available from stock
Upon request

Mounting brackets, polymer | Pivoting | Locking

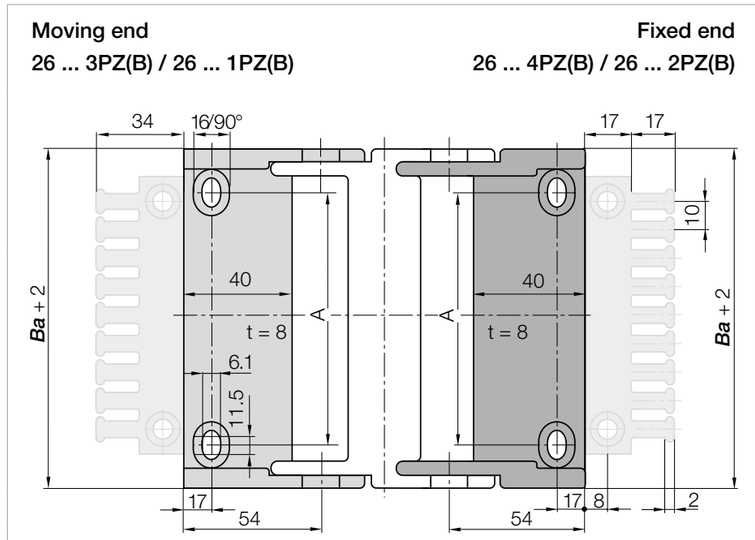

Width index	Part No. Full set Pivoting with tiewrap plates	Pivoting without tiewrap plates	Part No. Full set Locking with tiewrap plates	Locking without tiewrap plates	A [mm]	Number of teeth
07.	**2607.34PZB**	**2607.34PZ**	**2607.12PZB**	**2607.12PZ**	55	7
2/45.	**2610.34PZB**	**2610.34PZ**	**2610.12PZB**	**2610.12PZ**	80	10
3/45.	**2615.34PZB**	**2615.34PZ**	**2615.12PZB**	**2615.12PZ**	130	15

Full set with tiewrap plate + 10 cable tiewraps, please add index **K1**. Example: **Part No. 2607.34PZBK1**.

e-chain® order key

E26.07.150.0

Series | Width index | Bend radius | Colour index

Example:
Complete Part No. with the required radius □. Example:
E26.07.150.0 = "easy" design, split crossbar along the outer radius
Order index for colour options ▶ **www.igus.eu/info-colours**

Mounting bracket order key

2607.34PZ.A2

Series | Full set | With integrated strain relief tiewrap plates | Pre-fitted

Note: Possible variations for assembled mounting brackets. To receive mounting brackets with **pre-fitted** option please add index **.A1**, **.A2**, **.A3** or **.A4**.

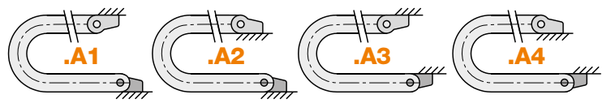

Available from stock
Upon request

Product range



Part No. Version E - split crossbar along the outer radius	Part No. Version Z - split crossbar along the inner radius	Inner width *Bi* [mm]	Outer width *Ba* [mm]	Weight [kg/m]
1-chamber design				
E300.075.□□.0	Z300.075.□□.0	75	95	≈ 1.60
2-chamber design				
E300.2/45.□□.0	Z300.2/45.□□.0	48/48	120	≈ 1.78
3-chamber design				
E300.3/45.□□.0*	Z300.3/45.□□.0*	47/46/47	170	≈ 1.92

Available bend radii *R* [mm] | 075 | 100 | 125 | 150 | 200 | 250 | 300 |

*Partial shelves for additional horizontal separation available, Part No. see page on the right.

Unsupported applications | Short travels

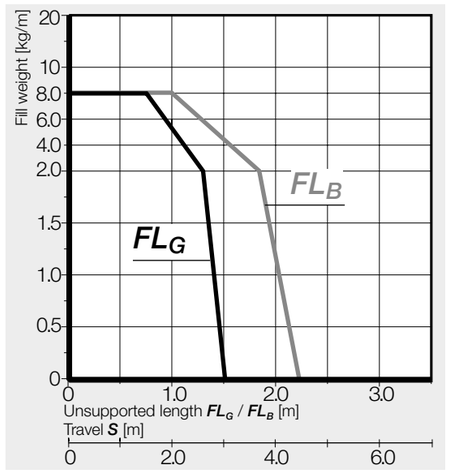

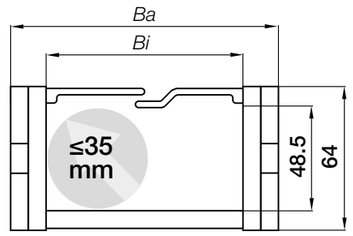

Inner height [mm]	**48.5**
Pitch [mm]	**67**
Links/m [pc.]	**15**
corresponds to [mm]	**1,005**
e-chain® length	$L_K = S/2 + K$

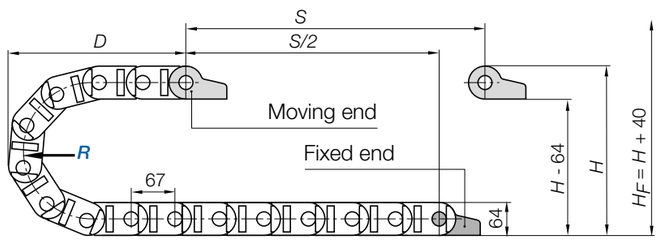

R	075	100	125	150	200	250	300
H^{+5}	214	264	314	364	464	564	664
D	208	233	258	283	333	383	433
K	370	450	530	610	765	920	1,080

The required clearance height: $H_F = H$ **+ 40mm** (with 2.5kg/m fill weight)

Available from stock
Upon request

easy chain® | Series E300 / Z300

E300
Z300

Mounting brackets, polymer | Pivoting | Locking

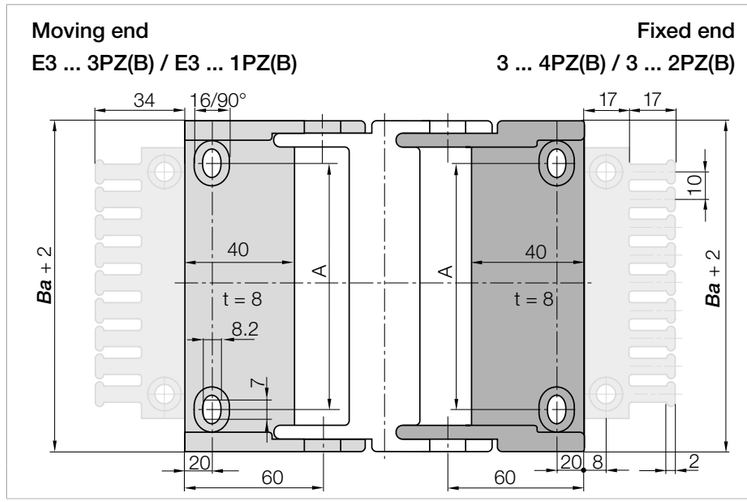

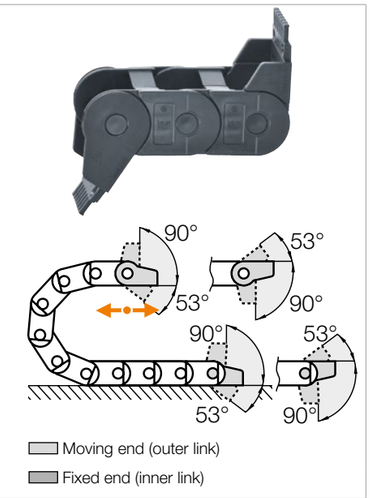

Width index	Part No. Full set Pivoting with tiewrap plates	Pivoting without tiewrap plates	Part No. Full set Locking with tiewrap plates	Locking without tiewrap plates	A [mm]	Number of teeth
075.	**E3075.34PZB**	**E3075.34PZ**	**E3075.12PZB**	**E3075.12PZ**	53	7
2/45.	**E3100.34PZB**	**E3100.34PZ**	**E3100.12PZB**	**E3100.12PZ**	78	10
3/45.	**E3150.34PZB**	**E3150.34PZ**	**E3150.12PZB**	**E3150.12PZ**	128	15

Full set with tiewrap plate + 10 cable tiewraps, please add index **K1**. Example: **Part No. E3075.34PZBK1**.

Interior separation | For E300.3/45 and Z300.3/45 with 3-chamber design

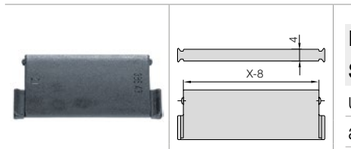

Part No. Shelf	
unassembled	**386,54**
assembled	**387,54**

Modular shelf

For additional horizontal subdivision of the inner space, shelves are available for e-chains® series E300.3/45 and Z300.3/45. They can be fitted at 7 different heights.

e-chain® order key

E300.075.150.0

Series | Width index | Bend radius | Colour index

Example:
Complete Part No. with the required radius □□. Example:
E300.075.150.0 = "easy" design, split crossbar along the outer radius
Order index for colour options ▶ **www.igus.eu/info-colours**

Mounting bracket order key

E3075.34PZ.A2

Series | Full set | With integrated strain relief tiewrap plates | Pre-fitted

Note: Possible variations for assembled mounting brackets. To receive mounting brackets with **pre-fitted** option please add index **.A1**, **.A2**, **.A3** or **.A4**.

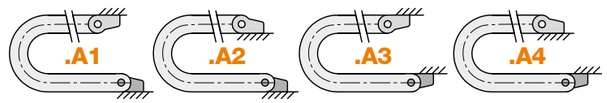

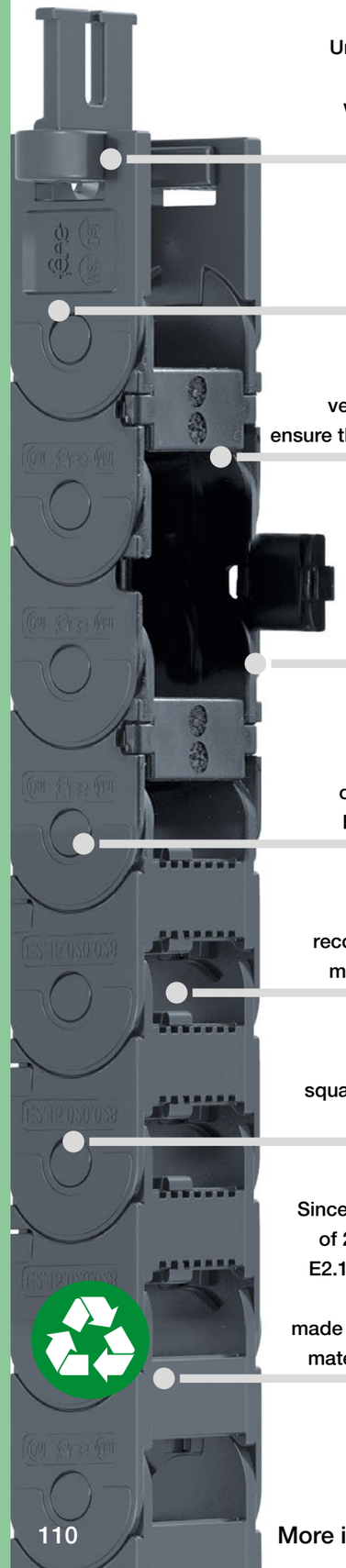

Universal connection: mounting bracket with strain relief and quickflange option

Strong: large, assembly-friendly pins

Cable-friendly: very smooth contours ensure the longest cable life

Variety of options: non-openable or openable along the inner or outer radius

Quiet operation: optimised integrated brake reduces noise

Lockable interior separation: recommended for side-mounted applications

Tough: square stop-dog system for large fill weights

Since the second quarter of 2025, all sizes of the E2.1 series (inner height 10mm to 48mm) are made of the new recycled material igumid® CG LW

For very small spaces, strong - E2 micro

E2 micro e-chains® are very small, one- and two-piece e-chains® with low weight, making them ideal for highly dynamic applications. E2 micro e-chains® are optimal for smallest installation spaces, and are available in many versions. They feature a strong stop-dog system for up to 25% longer unsupported travels as well as 100% higher fill weights (compared to similar igus® types). They are light, strong and easy to open. An e-chain® opener is included in order to open the e-chain® in one go. Many accessories like interior separation and fixation options are also available.

Benefits

- More useable space*
- 25% longer unsupported length*
- 100% more fill weight*
- 10% weight saving*
- Cable friendly interior separation range
- Openable from both sides (left or right)

* in comparison to equivalent igus® series

Typical application areas

- Model making (micro e-chains®)
- Automatic doors
- Vehicles
- Measuring machines
- Electric equipment
- Handling
- Pick and place
- Robot
- General machinery, etc.

Selection table

Part No.	Inner height *hi* [mm]	Outer height *ha* [mm]	Inner width *Bi* [mm]	Outer width *Ba* [mm]	Bend radius *R* [mm]	Unsupported length ≤ [m]	Page
E2C.1 micro / E2 micro - one-piece e-chains®, non-openable							
03	5	8	5 - 10	8.70 - 13.7	010 - 028	0.40	**112**
04	7	10	7 - 30	12 - 35	015 - 048	0.50	**114**
045	10.3	12.5	6 - 64	12 - 70	018 - 083	0.50	**116**
E2C.10L	10	12	6 - 30	10.7 - 34.4	018 - 038	0.61	**118**
E2C.10	10.6	15	6 - 50	13.4 - 57.4	018 - 038	0.75	**120**
E2C.15	14.9	19.3	10 - 50	17.8 - 57.8	028 - 075	1.30	**124**
E2C.17	17	23	25 - 63	36.1 - 74.1	028 - 145	1.25	**128**
E2i.1 micro - two-piece e-chains®, crossbars openable along the inner radius, from both sides							
E2i.10	10.1	15	6 - 50	13.4 - 57.4	018 - 038	0.75	**120**
E2i.15	14.4	19.3	10 - 50	17.8 - 57.8	028 - 075	1.30	**124**
E2i.17	17	23	15 - 80	26.1 - 91.1	028 - 145	1.25	**128**
E2.1 micro - two-piece e-chains®, crossbars openable along the outer radius, from both sides							
E2.10	10.1	15	6 - 50	13.4 - 57.4	018 - 038	0.75	**120**
E2.15	14.4	19.3	10 - 50	17.8 - 57.8	028 - 075	1.30	**124**
E2.17	17	23	15 - 80	26.1 - 91.1	028 - 145	1.25	**128**

Technical data

General properties

Speed gliding[1] / acceleration gliding[1]	≤ 10m/s / ≤ 50m/s²
Speed FL_G/acceleration FL_G	≤ 20m/s / ≤ 200m/s²
Speed FL_B/acceleration FL_B	≤ 3m/s / ≤ 6m/s²
Material igumid® NB - permitted temperature °C (03 series)	-40°C / +80°C
igumid® G LW material - permitted temperature °C (04/045 series)	-40°C/+120°C
igumid® CG LW material - permitted temperature °C (other series)	-40°C/+120°C
Flammability class, igumid® NB	VDE 0304 IIC UL94-V2
Flammability class, igumid® G LW	VDE 0304 IIC UL94-HB
Flammability class, igumid® CG LW	VDE 0304 IIC UL94-HB

1) For E2i.17 series openable along the inner radius in gliding applications, please consult igus®

Installation types, maximum travel lengths

Series	Unsupported	Gliding[1]	Vertical hanging	Vertical standing	Side mounted, unsupported	Rotary	Zig-zag
03	≤ 0.80m	upon request	upon request	upon request	upon request	upon request	upon request
04	≤ 1.00m	upon request	upon request	upon request	upon request	upon request	upon request
045	≤ 1.00m	upon request	upon request	upon request	upon request	upon request	upon request
E2C.10L	≤ 0.61m	upon request	upon request	upon request	upon request	upon request	upon request
E2.10	≤ 0.75m	upon request	upon request	upon request	upon request	upon request	upon request
E2.15	≤ 1.30m	upon request	upon request	upon request	upon request	upon request	upon request
E2.17	≤ 2.40m	upon request	upon request	upon request	upon request	upon request	upon request

1) For E2i.17 series openable along the inner radius in gliding applications, please consult igus®

Product range



Part No. One-piece, non-openable	Inner width *Bi* [mm]	Outer width *Ba* [mm]	Weight [kg/m]
03.05.□.0	5	8.7	≈ 0.04
03.07.□.0	7	10.7	≈ 0.05
03.10.□.0	10	13.7	≈ 0.06

Available bend radii *R* [mm] | 010 | 012 | 015 | 018 | 028 |

Unsupported applications | Short travels

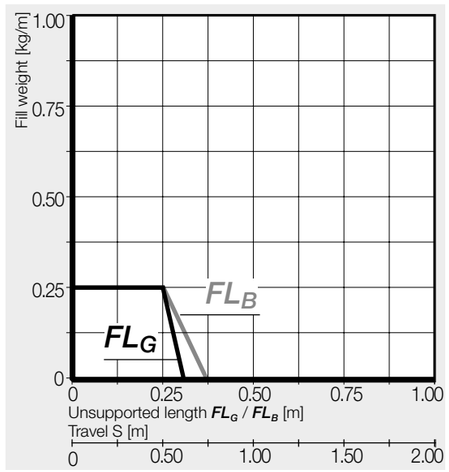

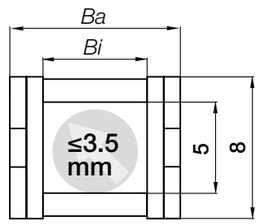

Inner height [mm]	**5**
Pitch [mm]	**10**
Links/m [pc.]	**100**
corresponds to [mm]	**1,000**
e-chain® length	$L_K = S/2 + K$

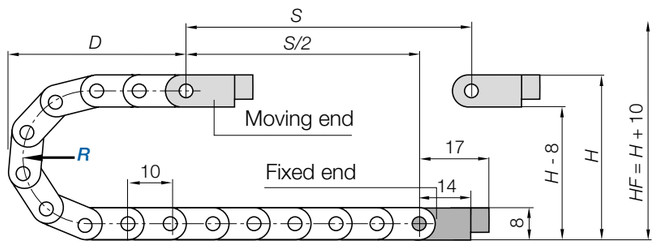

R	010	012	015	018	028
H	28	32	38	44	64
D	29	31	34	37	47
K	55	60	70	80	110

The required clearance height: $H_F = H + 10$mm (with 0.1kg/m fill weight)

Available from stock
Upon request

Mounting brackets, polymer | Pivoting

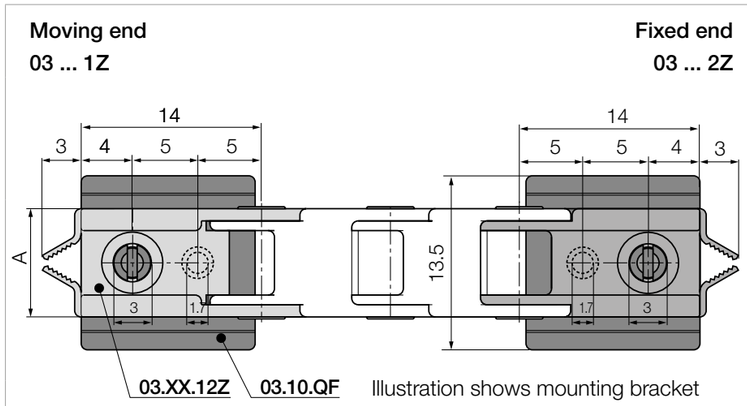

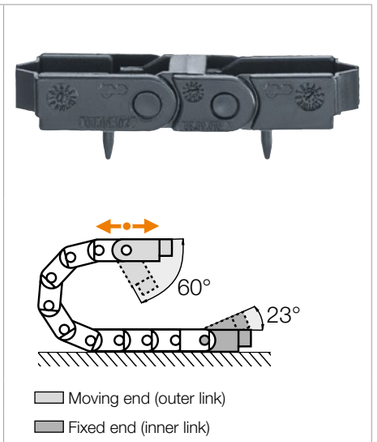

Width index	Part No. Full set Pivoting with tiewrap plates	A [mm]	Part No. Adapter plate Single part, optional
05.	**03.05.12Z**	8.7	**03.10.QF**
07.	**03.07.12Z**	10.7	**03.10.QF**
10.	**03.10.12Z**	13.7	**03.10.QF**

Material mounting bracket - igumid® G LW, temperature: -40° up to +120°C, VDE 0304 IIC UL94-HB.

Additional features | Adapter plate

Adapter plate for rapid installation for all sizes. With scored lines so that it can be adapted to the respective e-chain® width. The adapter plate is not always necessary when attaching the mounting brackets as they can also be screwed on without the adapter plate.

e-chain® order key

03.05.028.0

Series | Width index | Bend radius | Colour index

Example:
Complete Part No. with the required radius R **. Example:**
03.05.028.0 = one-piece, non-openable
Order index for colour options ▶ **www.igus.eu/info-colours**

Mounting bracket order key

03.05.12Z .A2

Series | Width index | Full set | With integrated strain relief tiewrap plates | Pre-fitted

Note: Possible variations for assembled mounting brackets.
To receive mounting brackets with **pre-fitted** option please add index **.A2** or **.A4**.

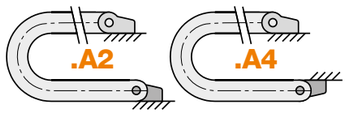

Product range



Part No. One-piece, non-openable	Inner width *Bi* [mm]	Outer width *Ba* [mm]	Weight [kg/m]
04.07.□.0	7	12	≈ 0.07
04.10.□.0	10	15	≈ 0.08
04.16.□.0	16	21	≈ 0.09
04.20.□.0	20	25	≈ 0.10
04.30.□.0	30	35	≈ 0.11
Available bend radii *R* [mm] | 015 | 018 | 028 | 038 | 048 |			

Unsupported applications | Short travels

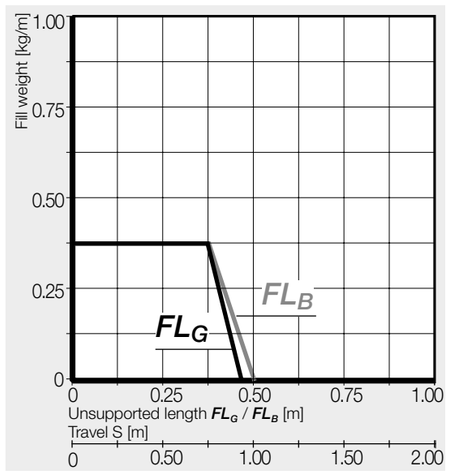

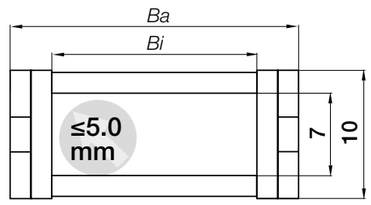

Inner height [mm]	**7**
Pitch [mm]	**16.7**
Links/m [pc.]	**60**
corresponds to [mm]	**1,002**
e-chain® length	$L_K = S/2 + K$

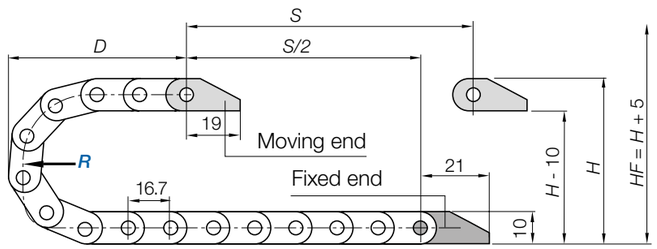

R	015	018	028	038	048
H	40	46	66	86	106
D	45	48	58	68	78
K	85	90	125	155	185

The required clearance height: $H_F = H + 5$mm (with 0.1kg/m fill weight)

Available from stock

Upon request

Mounting brackets, polymer | Pivoting

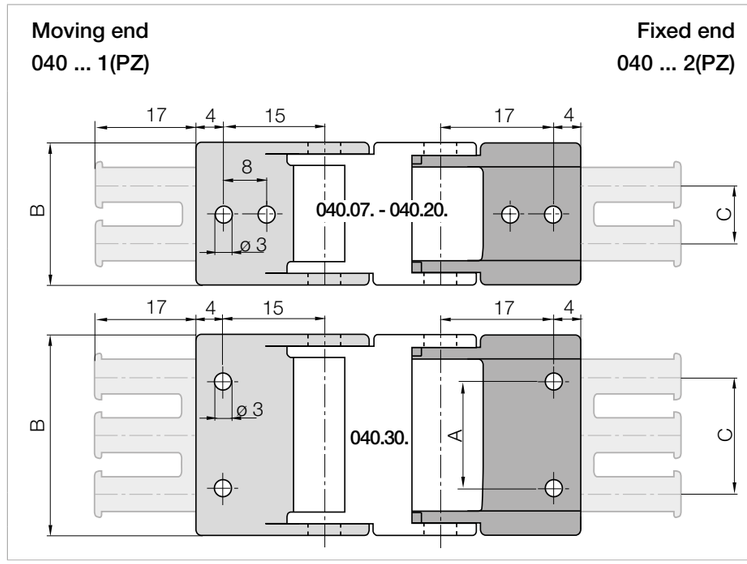

Width index	Part No. Full set Pivoting with tiewrap plates	Part No. Full set Pivoting without tiewrap plates	A [mm]	B [mm]	C [mm]	Number of teeth
07.	**040.07.12PZ**	**040.07.12**	–	12	–	1
10.	**040.10.12PZ**	**040.10.12**	–	15	–	1
16.	**040.16.12PZ**	**040.16.12**	–	21	10	2
20.	**040.20.12PZ**	**040.20.12**	–	25	10	2
30.	**040.30.12PZ**	**040.30.12**	22	35	20	3

e-chain® order key

04.10.028.0

Series | Width index | Bend radius | Colour index

Example:
Complete Part No. with the required radius *R*. **Example:**
04.10.028.0 = one-piece, non-openable
Order index for colour options ▶ **www.igus.eu/info-colours**

Mounting bracket order key

040.07.12PZ .A2

Series | Width index | Full set | With integrated strain relief tiewrap plates | Pre-fitted

Note: Possible variations for assembled mounting brackets.
To receive mounting brackets with **pre-fitted** option please add index **.A2** or **.A4**.

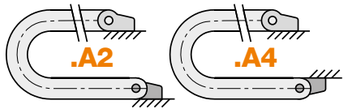

Product range



Part No. One-piece, non-openable	Inner width *Bi* [mm]	Outer width *Ba* [mm]	Weight [kg/m]
045.06.□.0	6	12	≈ 0.09
045.10.□.0	10	16	≈ 0.10
045.16.□.0	16	22	≈ 0.11
045.20.□.0	20	26	≈ 0.13
045.30.□.0	30	36	≈ 0.16
045.64.□.0	64	70	≈ 0.19
Available bend radii *R* [mm] | 018 | 028 | 038 | 083*|			

*Radius 083 only available for Part No. 045.20.

Unsupported applications | Short travels

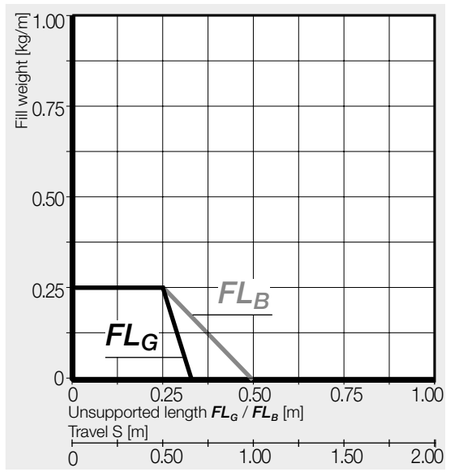

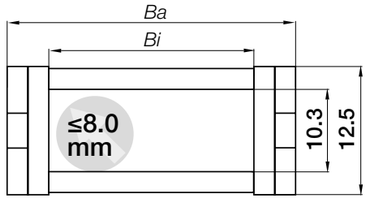

Inner height [mm]	**10.3**
Pitch [mm]	**13**
Links/m [pc.]	**77**
corresponds to [mm]	**1,001**
e-chain® length	$L_K = S/2 + K$

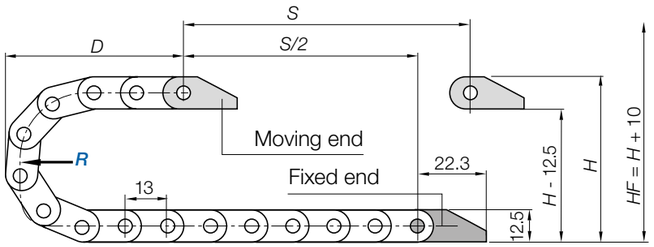

R	018	028	038	083*
H	48.5	68.5	88.5	178.5
D	44	54	64	109
K	85	115	150	290

The required clearance height: $H_F = H + 10mm$ (with 0.2kg/m fill weight)

*Radius 083 only available for Part No. 045.20.

Mounting brackets, polymer | One end pivoting

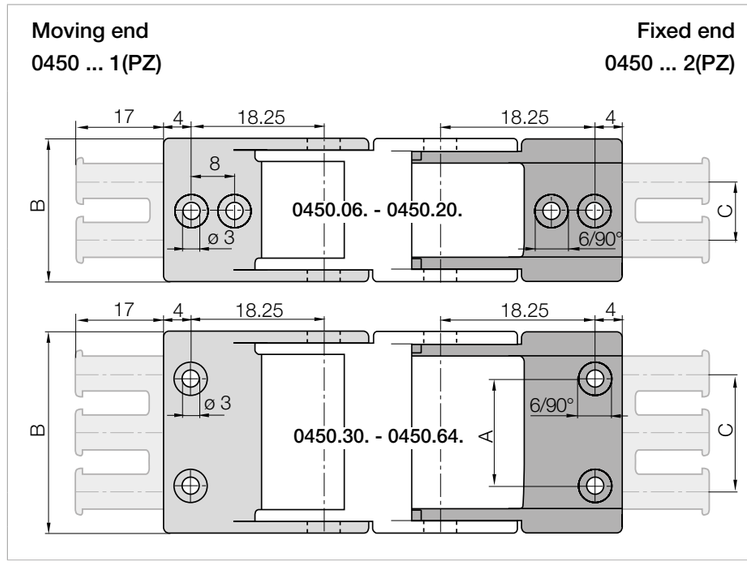



Hole pattern for part numbers **0450.06. - 0450.20.**
= drawing above left
Hole pattern for part numbers **0450.30. - 0450.64.**
= drawing below left

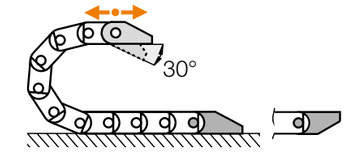

Moving end (outer link)
Fixed end (inner link)

Width index	Part No. Full set One end pivoting with tiewrap plates*	Part No. Full set One end pivoting without tiewrap plates**	A [mm]	B [mm]	C [mm]	Number of teeth
06.	**0450.06.12PZ**	**0450.06.12**	–	12	–	1
10.	**0450.10.12PZ**	**0450.10.12**	–	16	–	1
16.	**0450.16.12PZ**	**0450.16.12**	–	22	10	2
20.	**0450.20.12PZ**	**0450.20.12**	–	26	10	2
30.	**0450.30.12PZ**	**0450.30.12**	22	36	20	3
64.	**0450.64.12PZ**	**0450.64.12**	56	70	50	6

*Countersink Ø 3mm / ø 6mm 90° / **Only holes of Ø 3mm

e-chain® order key

045.10.028.0

Series | Width index | Bend radius | Colour index

Example:
Complete Part No. with the required radius R. Example:
045.10.028.0 = one-piece, non-openable
Order index for colour options ▶ **www.igus.eu/info-colours**

Mounting bracket order key

040.10.12ZB.A2

Series | Width index | Full set | With integrated strain relief tiewrap plates | Pre-fitted

Note: Possible variations for assembled mounting brackets.
To receive mounting brackets with **pre-fitted** option please add index **.A2** or **.A4**.

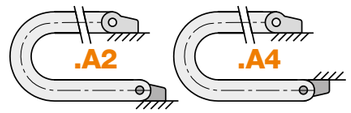

Product range

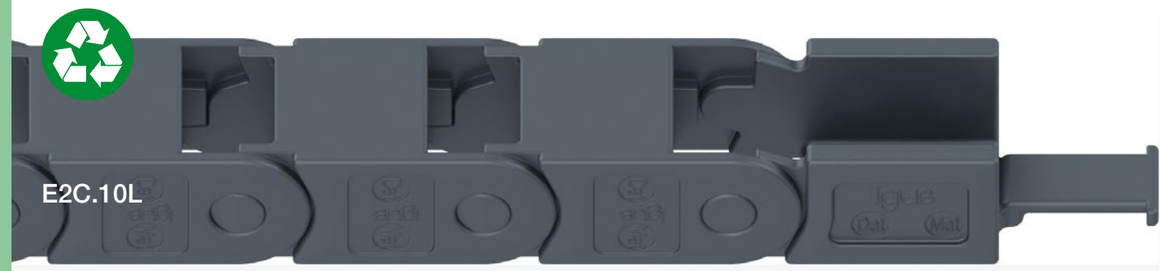

Part No. One-piece, non-openable	Inner width *Bi* [mm]	Outer width *Ba* [mm]	Weight [kg/m]
E2C.10L.06.□.0	6	10.7	≈ 0.06
E2C.10L.10.□.0	10	14.7	≈ 0.07
E2C.10L.16.□.0	16	20.7	≈ 0.07
E2C.10L.20.□.0	20	24.7	≈ 0.08
E2C.10L.30.□.0	30	34.7	≈ 0.09
Available bend radii *R* [mm] | 018 | 028 | 038 |			

Unsupported applications | Short travels

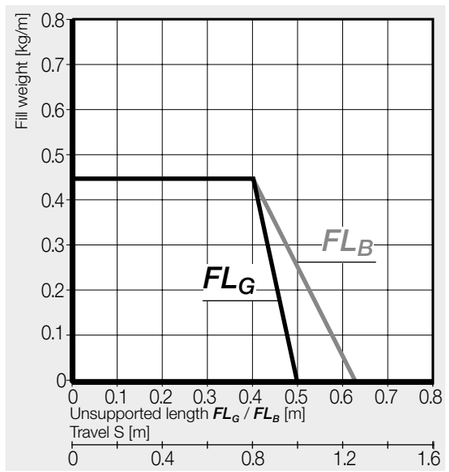

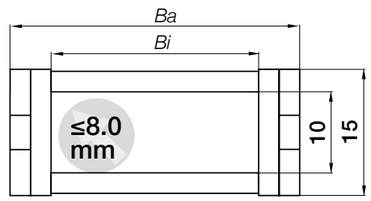

Inner height [mm]	10
Pitch [mm]	20
Links/m [pc.]	50
corresponds to [mm]	1,000
e-chain® length	$L_K = S/2 + K$

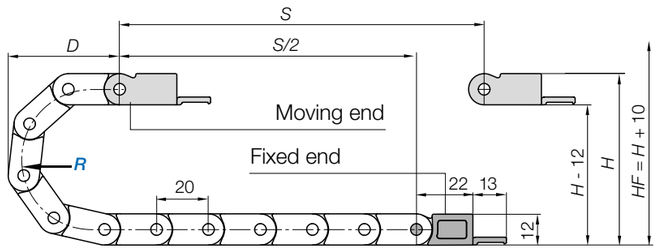

R	018	028	038
H	48	68	88
D	54	64	74
K	100	130	160

The required clearance height: $H_F = H$ + **10mm** (with 0.2kg/m fill weight)

Available from stock

Upon request

Mounting brackets, polymer | Pivoting | Locking

Moving end		Fixed end
E2.100L ... 3PZ	both ends pivoting	**E2.100L ... 4PZ**
E2.100L ... 5PZ	one end pivoting*	**E2.100L ... 6PZ**
E2.100L ... 1PZ	both ends locking	**E2.100L ... 2PZ**

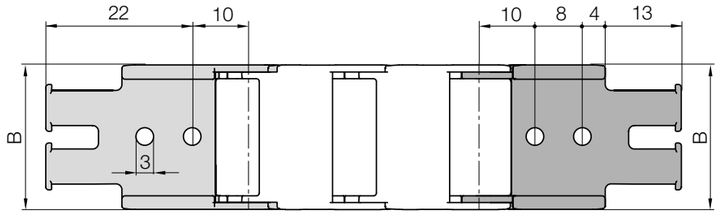

Pre-fitted mounted brackets options: A1-A4

E2.100L.BB.1PZ Locking moving end / Stop-dog on outer contour!
E2.100L.BB.2PZ Locking fixed end / Side-mounted
E2.100L.BB.3PZ Moving end both ends pivoting +90° -67.5°
E2.100L.BB.4PZ Fixed end both ends pivoting +90° -67.5°
E2.100L.BB.5PZ Moving end one end pivoting only to the inner radius
E2.100L.BB.6PZ Fixed end one end pivoting -67.5°

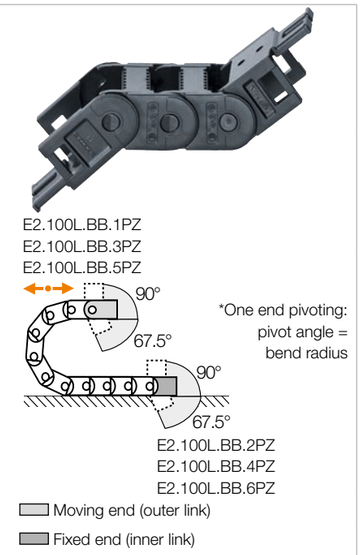

*One end pivoting: pivot angle = bend radius

Width index	Part No. Full set Both ends pivoting with tiewrap plates	Part No. Full set One end pivoting* with tiewrap plates	Part No. Full set Both ends locking with tiewrap plates	A [mm]	B [mm]	*Bi* [mm]
06.	**E2.100L.06.34PZ**	**E2.100L.06.56PZ**	**E2.100.06.12PZ**	–	10.7	1
10.	**E2.100L.10.34PZ**	**E2.100L.10.56PZ**	**E2.100.10.12PZ**	–	14.7	1
16.	**E2.100L.16.34PZ**	**E2.100L.16.56PZ**	**E2.100.16.12PZ**	–	20.7	2
20.	**E2.100L.20.34PZ**	**E2.100L.20.56PZ**	**E2.100.20.12PZ**	–	24.7	2
30.	**E2.100L.30.34PZ**	**E2.100L.30.56PZ**	**E2.100.30.12PZ**	22	34.7	3

*One end only pivots towards the inner radius - whether fitted A1 or A4.

e-chain® order key

E2C.10L.30.018.0

Series / Type	Inner height	Width index	Bend radius	Colour index

Example:
Complete Part No. with the required radius R**. Example:**
E2C.10L.30.018.0 = one-piece, non-openable
Order index for colour options ▶ **www.igus.eu/info-colours**

Mounting bracket order key

E2.100L.30.34PZB.A2

Series	Width index	Full set	With integrated strain relief tiewrap plates	Pre-fitted

Note: To receive pre-fitted mounting brackets **without strain relief**, please add index **.A**. For pre-fitted variant **with strain relief** please add index **.A1**, **.A2**, **.A3** or **.A4**.

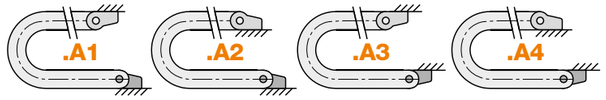

E2.1 micro | Series E2i.10 / E2.10 / E2C.10

Product range

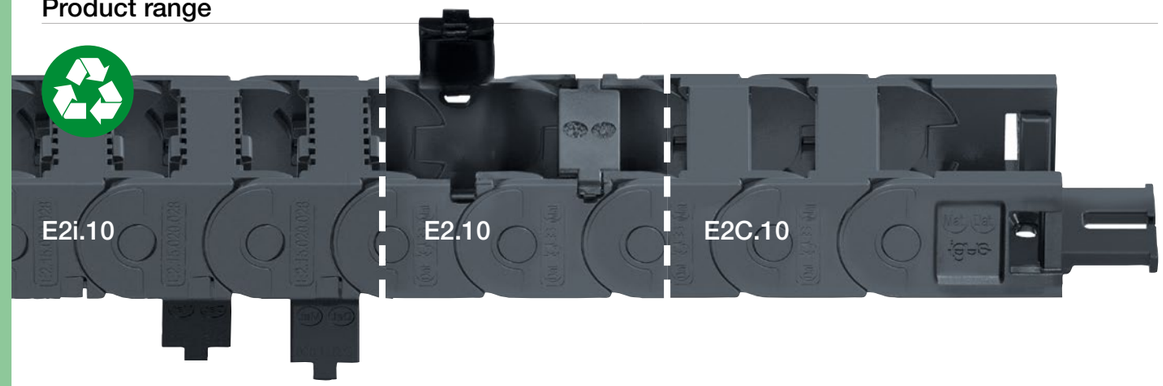

Part No. Openable along the inner radius	Part No. Openable along the outer radius	Part No. One-piece, non-openable	Inner width *Bi* [mm]	Outer width *Ba* [mm]	Weight [kg/m]
E2I.10.06.□.0*	E2.10.06.□.0*	E2C.10.06.□.0*	6	13.4	≈ 0.13
E2I.10.10.□.0*	E2.10.10.□.0*	E2C.10.10.□.0*	10	17.4	≈ 0.14
E2I.10.16.□.0	E2.10.16.□.0	E2C.10.16.□.0	16	23.4	≈ 0.16
E2I.10.20.□.0	E2.10.20.□.0	E2C.10.20.□.0	20	27.4	≈ 0.17
E2I.10.30.□.0	E2.10.30.□.0	E2C.10.30.□.0	30	37.4	≈ 0.19
E2I.10.40.□.0	E2.10.40.□.0	E2C.10.40.□.0	40	47.4	≈ 0.22
E2I.10.50.□.0	E2.10.50.□.0	E2C.10.50.□.0	50	57.4	≈ 0.25
Available bend radii *R* [mm] | 018 | 028 | 038 |					

*Interior separation not possible.

Order key

E2.10.20.038.0

Series / Type	Inner height	Width index	Bend radius	Colour index

Example:
Complete Part No. with the required radius □. Example:
E2I.10.20.038.0 = crossbars openable along the inner radius, from both sides
E2.10.20.038.0 = crossbars openable along the outer radius, from both sides
E2C.10.20.038.0 = one-piece, non-openable
Order index for colour options ▶ **www.igus.eu/info-colours**

Available from stock
Upon request

E2.1 micro | Series E2i.10 / E2.10 / E2C.10

E2i.10
E2.10
E2C.10

Unsupported applications | Short travels

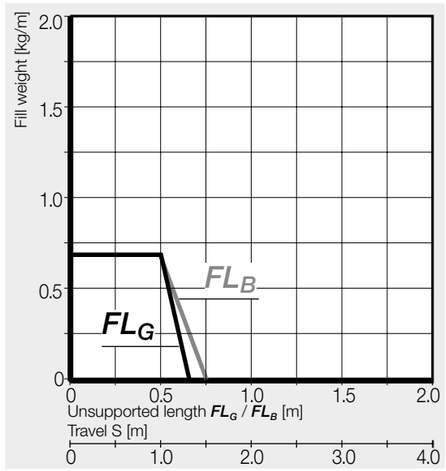

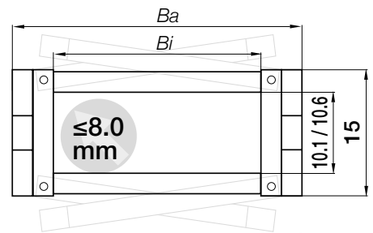

E2i.10 inner height [mm]	10.1
E2.10 inner height [mm]	10.1
E2C.10 inner height [mm]	10.6
Pitch [mm]	20
Links/m [pc.]	50
corresponds to [mm]	1,000
e-chain® length	$L_K = S/2 + K$

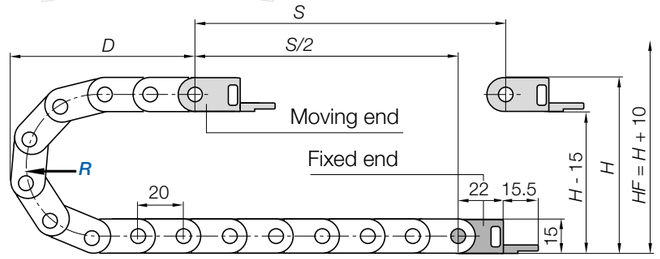

R	018	028	038
H	51	71	91
D	56	66	76
K	100	130	160

The required clearance height: $H_F = H$ **+ 10mm** (with 0.2kg/m fill weight)

Glide pads for energy chains on long travels

- Low-friction and low-wear gliding elements increase the service life of igus® e-chains® in gliding applications
- For travel speeds from 1 to 3m/s
- Especially in an environment where abrasive media are present
- Easy to retrofit

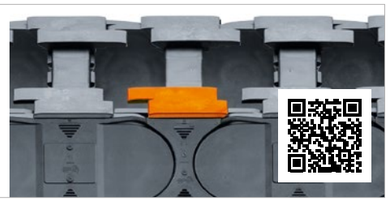

Available from stock
Upon request

Mounting brackets, polymer | Pivoting | Locking

Moving end		Fixed end
E2.100 ... 3PZ	both ends pivoting	**E2.100 ... 4PZ**
E2.100 ... 5PZ	one end pivoting*	**E2.100 ... 6PZ**
E2.100 ... 1PZ	both ends locking	**E2.100 ... 2PZ**

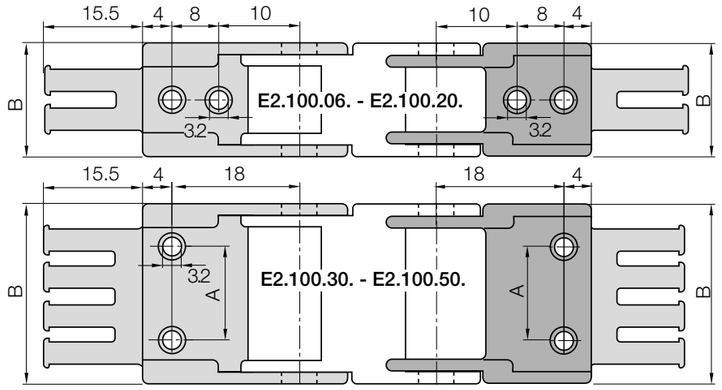



Hole pattern for part numbers **E2.100.06. - E2.100.20.**
= drawing above left
Hole pattern for part numbers **E2.100.30. - E2.100.50.**
= drawing below left

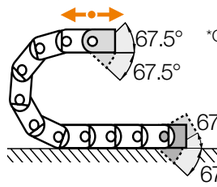

*One end pivoting: pivot angle = bend radius

Moving end (outer link)
Fixed end (inner link)

Width index	Part No. Full set Both ends pivoting with tiewrap plates	Part No. Full set One end pivoting* with tiewrap plates	Part No. Full set Both ends locking with tiewrap plates	A [mm]	B [mm]	*Bi* [mm]
06.	**E2.100.06.34PZ**	**E2.100.06.56PZ**	**E2.100.06.12PZ**	–	13.4	1
10.	**E2.100.10.34PZ**	**E2.100.10.56PZ**	**E2.100.10.12PZ**	–	17.4	1
16.	**E2.100.16.34PZ**	**E2.100.16.56PZ**	**E2.100.16.12PZ**	–	23.4	2
20.	**E2.100.20.34PZ**	**E2.100.20.56PZ**	**E2.100.20.12PZ**	–	27.4	2
30.	**E2.100.30.34PZ**	**E2.100.30.56PZ**	**E2.100.30.12PZ**	22	37.4	3
40.	**E2.100.40.34PZ**	**E2.100.40.56PZ**	**E2.100.40.12PZ**	32	47.4	4
50	**E2.100.50.34PZ**	**E2.100.50.56PZ**	**E2.100.50.12PZ**	42	57.4	5

*One end only pivots towards the inner radius - whether fitted A1 or A4.

Order key

E2.100.20.34ZB .A1

Series	Width index	Full set	With integrated strain relief tiewrap plates	Pre-fitted

Note: Possible variations for assembled mounting brackets.
To receive mounting brackets with **pre-fitted** option please add index **.A1**, **.A2**, **.A3** or **.A4**.

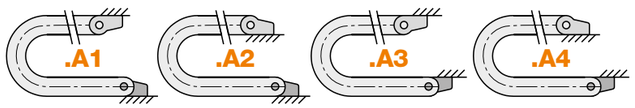

Additional features | Quickflange

The quickflange can be clipped-in to all mounting brackets. Contains a housing for hexagon nut and socket cap bolt M3. **Single Part No.: E2.100.QF or Part No. incl. mounting bracket: E2.100.20.34PZ.QF**



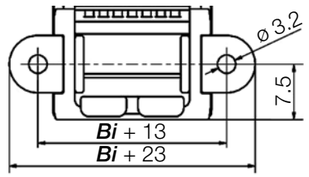

Interior separation | Increase cable service life

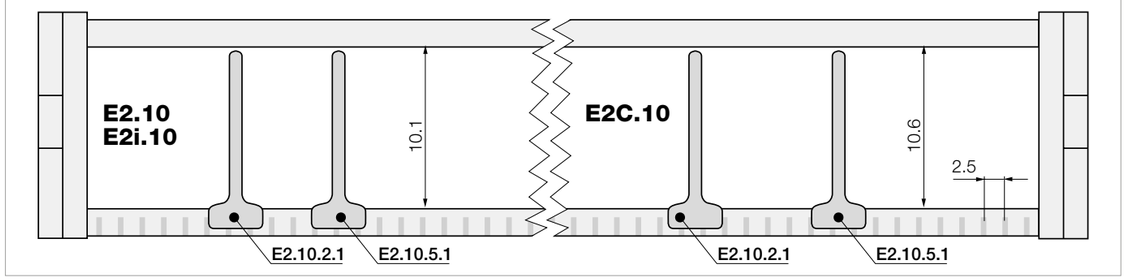

Note: for one-piece, non-openable e-chain® links please assemble the interior separation before fitting the e-chain®!
As standard separators are fitted every 2nd e-chain® link!

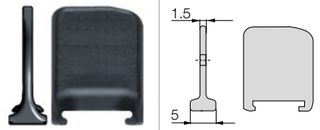

Part No. Separator*	
unassembled	**E2.10.2**
assembled	**E2.10.2.1**

Standard - for any application

For easy vertical separation in e-chains®. Separators can be arranged in any position in the cross-section. Without notches, freely movable.

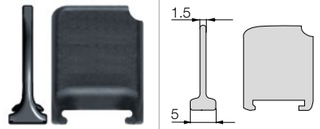

Part No. Notch separator*	
unassembled	**E2.10.5**
assembled	**E2.10.5.1**

Locks securely in preset increments

Notch separator for exact positioning.
Recommended for side-mounted applications.

Note: *interior separation not suitable for inner widths *Bi* 06 and 10!

Available from stock
Upon request

E2.1 micro | Series E2i.15 / E2.15 / E2C.15

Product range

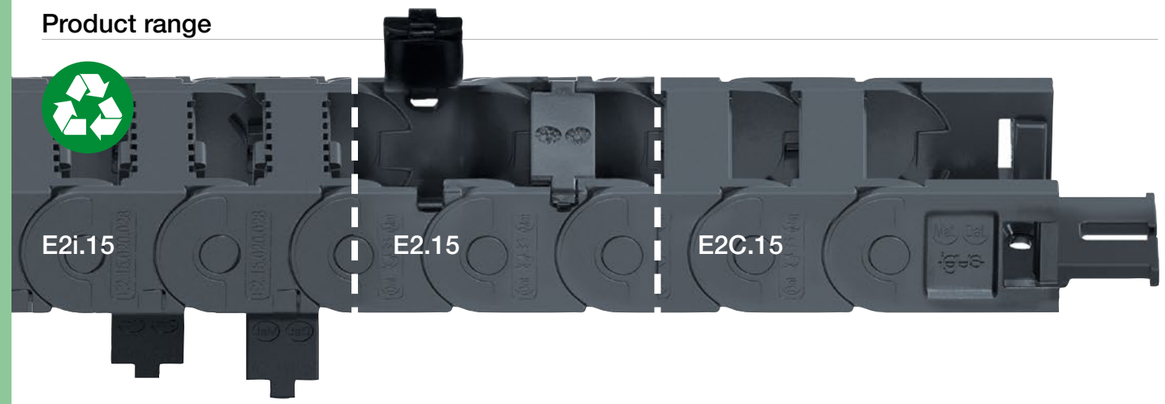

Part No. Openable along the inner radius	Part No. Openable along the outer radius	Part No. One-piece, non-openable	Inner width *Bi* [mm]	Outer width *Ba* [mm]	Weight [kg/m]
E2I.15.10.□.0	E2.15.10.□.0	E2C.15.10.□.0	10	17.8	≈ 0.18
E2I.15.13.□.0	E2.15.13.□.0	E2C.15.13.□.0	13	20.8	≈ 0.19
E2I.15.16.□.0	E2.15.16.□.0	E2C.15.16.□.0	16	23.8	≈ 0.20
E2I.15.20.□.0	E2.15.20.□.0	E2C.15.20.□.0	20	27.8	≈ 0.21
E2I.15.30.□.0	E2.15.30.□.0	E2C.15.30.□.0	30	37.8	≈ 0.24
E2I.15.40.□.0*	E2.15.40.□.0*	E2C.15.40.□.0*	40	47.8	≈ 0.26
E2I.15.50.□.0*	E2.15.50.□.0*	E2C.15.50.□.0	50	57.8	≈ 0.29

Available bend radii *R* [mm] | 028 | 038 | 048 | 075* |

*Radius 075 only available for these series.

Order key

E2 . 15 . 50 . 038 . 0

Series / Type	Inner height	Width index	Bend radius	Colour index

Example:
Complete Part No. with the required radius □. Example:
E2I.15.50.038.0 = crossbars openable along the inner radius, from both sides
E2.15.50.038.0 = crossbars openable along the outer radius, from both sides
E2C.15.50.038.0 = one-piece, non-openable
Order index for colour options ▶ **www.igus.eu/info-colours**

Available from stock
Upon request

E2.1 micro | Series E2i.15 / E2.15 / E2C.15

E2i.15
E2.15
E2C.15

Unsupported applications | Short travels

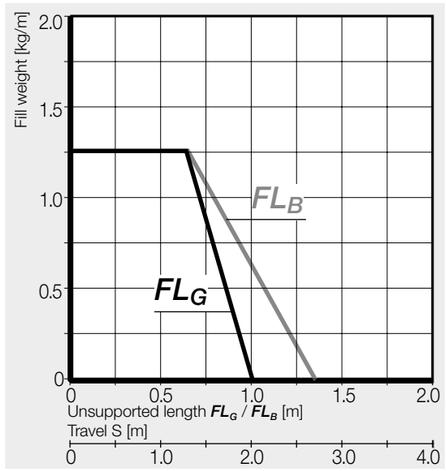

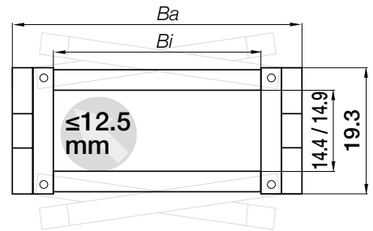

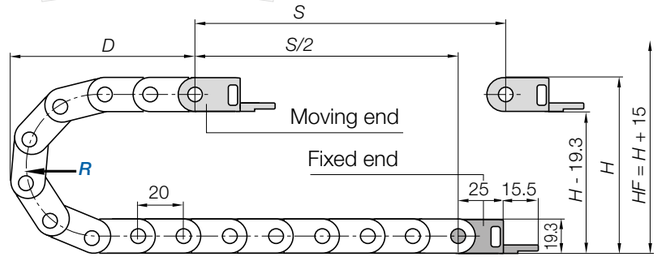

E2i.15 inner height [mm]	14.4
E2.15 inner height [mm]	14.4
E2C.15 inner height [mm]	14.9
Pitch [mm]	20
Links/m [pc.]	50
corresponds to [mm]	1,000
e-chain® length	$L_K = S/2 + K$

R	028	038	048	075*
H	75	95	115	169
D	68	78	88	115
K	130	160	195	280

The required clearance height: $H_F = H$ **+ 15mm** (with 0.3kg/m fill weight)

Available from stock
Upon request

Mounting brackets, polymer | Pivoting | Locking

Moving end		Fixed end
E2.150 ... 3PZ	both ends pivoting	E2.150 ... 4PZ
E2.150 ... 5PZ	one end pivoting*	E2.150 ... 6PZ
E2.150 ... 1PZ	both ends locking	E2.150 ... 2PZ

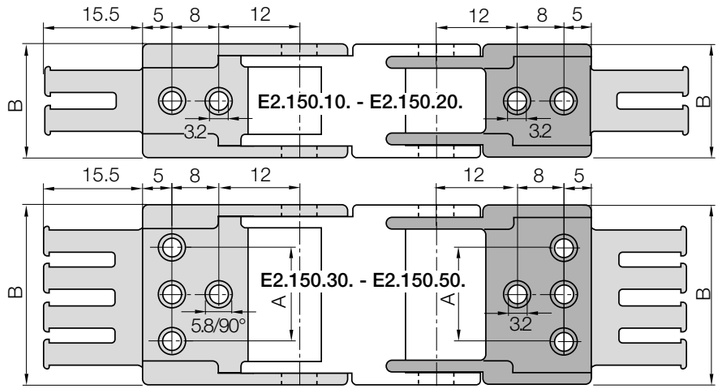



Hole pattern for part numbers **E2.150.10. - E2.150.20.**
= drawing above left
Hole pattern for part numbers **E2.150.30. - E2.150.50.**
= drawing below left

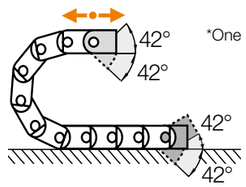

*One end pivoting: pivot angle = bend radius

Moving end (outer link)
Fixed end (inner link)

Width index	Part No. Full set Both ends pivoting with tiewrap plates	Part No. Full set One end pivoting* with tiewrap plates	Part No. Full set Both ends locking with tiewrap plates	A [mm]	B [mm]	*Bi* [mm]
10.	**E2.150.10.34PZ**	**E2.150.10.56PZ**	**E2.150.10.12PZ**	–	17.8	1
13.	**E2.150.13.34PZ**	**E2.150.13.56PZ**	**E2.150.13.12PZ**	–	20.8	1
16.	**E2.150.16.34PZ**	**E2.150.16.56PZ**	**E2.150.16.12PZ**	–	23.8	2
20.	**E2.150.20.34PZ**	**E2.150.20.56PZ**	**E2.150.20.12PZ**	–	27.8	2
30.	**E2.150.30.34PZ**	**E2.150.30.56PZ**	**E2.150.30.12PZ**	22	37.8	3
40.	**E2.150.40.34PZ**	**E2.150.40.56PZ**	**E2.150.40.12PZ**	32	47.8	4
50.	**E2.150.50.34PZ**	**E2.150.50.56PZ**	**E2.150.50.12PZ**	42	57.8	5

*One end only pivots towards the inner radius - whether fitted A1 or A4.

Order key

E2.150.50 . 34ZB .A1

Series	Width index	Full set	With integrated strain relief tiewrap plates	Pre-fitted

Note: Possible variations for assembled mounting brackets.
To receive mounting brackets with **pre-fitted** option please add index **.A1**, **.A2**, **.A3** or **.A4**.

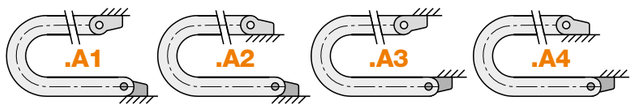

Additional features | Quickflange

The quickflange can be clipped-in to all mounting brackets. Contains a housing for hexagon nut and socket cap bolt M3. **Single Part No.: E2.150.QF or Part No. incl. mounting bracket: E2.150.20.34PZ.QF**



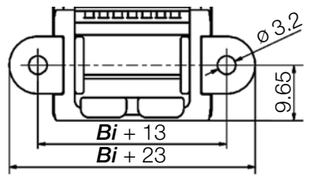

Interior separation | Increase cable service life

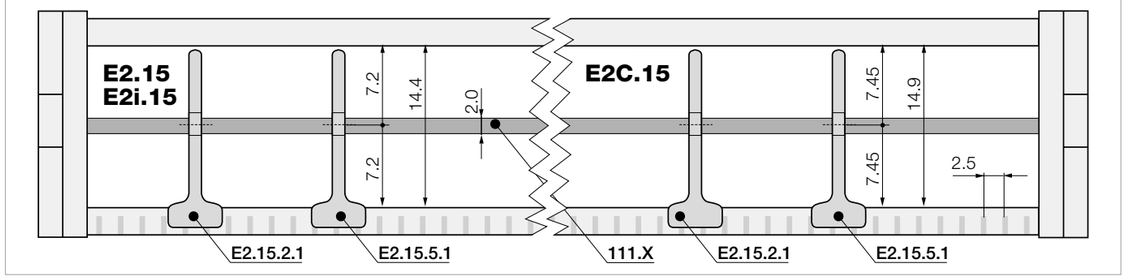

Note: for one-piece, non-openable e-chain® links please assemble the interior separation before fitting the e-chain®! As standard separators are fitted every 2nd e-chain® link!



Part No. Separator	
unassembled	**E2.15.2**
assembled	**E2.15.2.1**

Standard - for any application

For easy vertical separation in e-chains®. Separators can be arranged in any position in the cross-section. Without notches, freely movable.



Part No. Notch separator	
unassembled	**E2.15.5**
assembled	**E2.15.5.1**

Locks securely in preset increments

Notch separator for exact positioning.
Recommended for side-mounted applications.

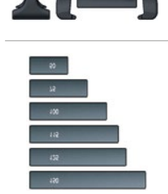

Part No. Full-width shelf	
unassembled	**110.X**
assembled	**111.X**

Full-width shelf

This option is for applications with many small cables with similar diameters. For full-width separation.

Width [mm]	Part No. unassembled	Part No. assembled
010	**110.10**	**111.10**
013	**110.13**	**111.13**
016	**110.16**	**111.16**
020	**110.20**	**111.20**
030	**110.30**	**111.30**
040	**110.40**	**111.40**
050	**110.50**	**111.50**

Available from stock
Upon request

Product range



Part No. Openable along the inner radius	Part No. Openable along the outer radius	Part No. One-piece, non-openable	Inner width *Bi* [mm]	Outer width *Ba* [mm]	Weight [kg/m]
E2I.17.015.□.0	E2.17.015.□.0	E2C.17.015.□.0*	15	26.1	≈ 0.34
E2I.17.025.□.0	E2.17.025.□.0	E2C.17.025.□.0	25	36.1	≈ 0.37
E2I.17.038.□.0	E2.17.038.□.0	E2C.17.038.□.0	38	49.1	≈ 0.41
E2I.17.050.□.0	E2.17.050.□.0	E2C.17.050.□.0	50	61.1	≈ 0.45
E2I.17.063.□.0	E2.17.063.□.0	E2C.17.063.□.0	63	74.1	≈ 0.50
E2I.17.080.□.0	E2.17.080.□.0	E2C.17.080.□.0*	80	91.1	≈ 0.55
E2I.17.100.□.0*	E2.17.100.□.0*	E2C.17.100.□.0*	100	111.1	≈ 0.62

Available bend radii *R* [mm] | 028 | 038 | 048 | 063 | 075 | 100 | 110 | 125 | 145 |

*Width available upon request, please consult igus® for delivery time.

Order key

E2.17.050.100.0

Series / Type | Inner height | Width index | Bend radius | Colour index

Example:
Complete Part No. with the required radius □. Example:
E2I.17.050.100.0 = crossbars openable along the inner radius, from both sides
E2.17.050.100.0 = crossbars openable along the outer radius, from both sides
E2C.17.050.100.0 = one-piece, non-openable
Order index for colour options ▶ **www.igus.eu/info-colours**

Available from stock
Upon request

E2.1 micro | Series E2i.17 / E2.17 / E2C.17

E2i.17
E2.17
E2C.17

Unsupported applications | Short travels

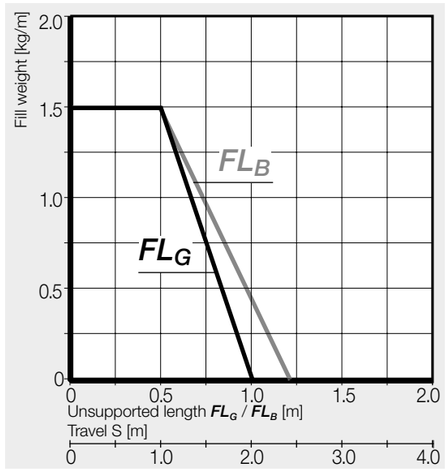

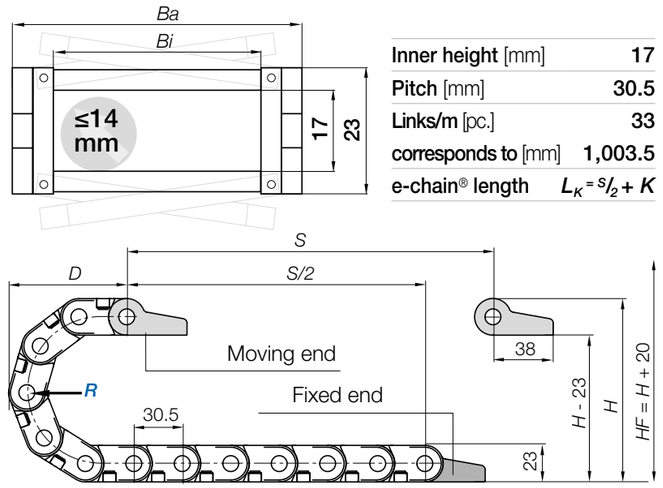

Inner height [mm]	17
Pitch [mm]	30.5
Links/m [pc.]	33
corresponds to [mm]	1,003.5
e-chain® length	$L_K = S/2 + K$

R	028	038	048	063	075	100	110	125	145
H	79	99	119	149	173	223	243	273	313
D	85	95	105	120	132	157	167	182	202
K	150	185	215	260	300	380	410	455	520

The required clearance height: $H_F = H + 20$mm (with 0.5kg/m fill weight)

Gliding applications | For travel lengths from 8m to max. 40m

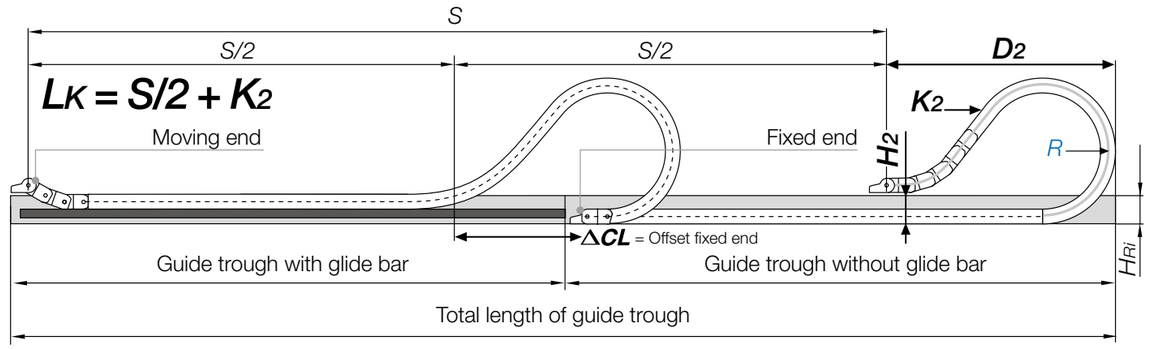

R	028	038	048	063	075	100	110	125	145
H_2	56	76	96	100	100	100	–	–	–
D_2^{+25}	93	103	113	183	255	340	–	–	–
K_2	153	183	214	336	427	580	–	–	–
ΔCL	–	–	–	70	130	190	–	–	–

Note: Before using series E2i.17 on long travels please consult igus®.
For long travels, igus® recommends series E2.17 or E2C.17.

Available from stock
Upon request

Mounting brackets, polymer | Pivoting | Locking

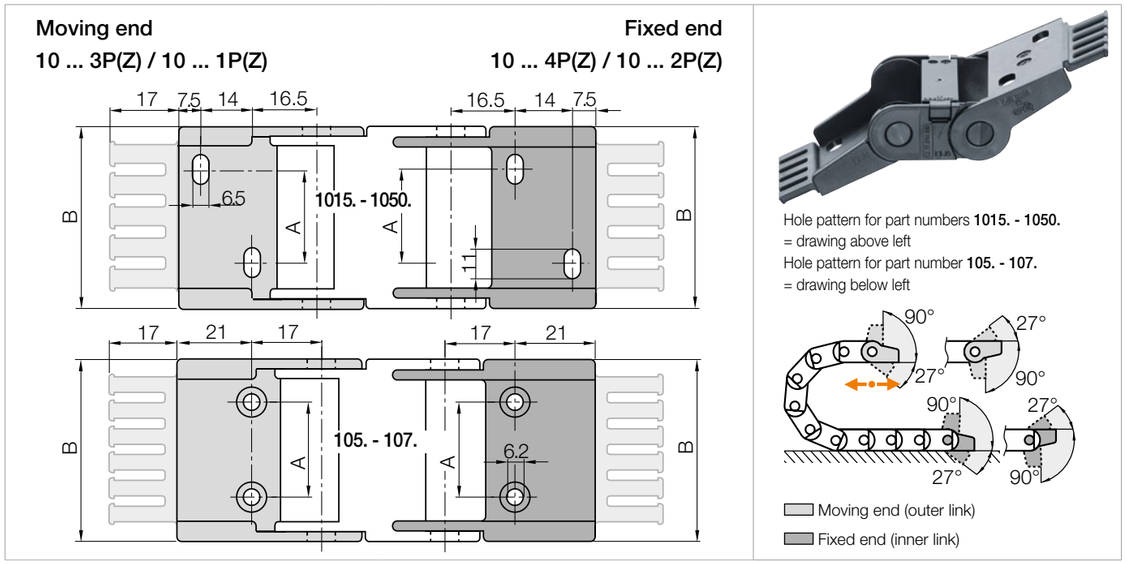

Hole pattern for part numbers **1015. - 1050.**
= drawing above left
Hole pattern for part number **105. - 107.**
= drawing below left

Moving end (outer link)
Fixed end (inner link)

Width index	Part No. Full set Pivoting with tiewrap plates	Pivoting without tiewrap plates	Part No. Full set Locking with tiewrap plates	Locking without tiewrap plates	A [mm]	B [mm]	Number of teeth
015.	**1015.34PZ**	**1015.34P**	**1015.12PZ**	**1015.12P**	–	25.5	2
025.	**1025.34PZ**	**1025.34P**	**1025.12PZ**	**1025.12P**	10	35.5	3
038.	**1038.34PZ**	**1038.34P**	**1038.12PZ**	**1038.12P**	23	48.5	4
050.	**1050.34PZ**	**1050.34P**	**1050.12PZ**	**1050.12P**	35	60.5	5
063.	**105.34PZ**	**105.34P**	**105.12PZ**	**105.12P**	48	75.0	6
080.	**106.34PZ**	**106.34P**	**106.12PZ**	**106.12P**	65	92.0	8
100.	**107.34PZ**	**107.34P**	**107.12PZ**	**107.12P**	85	112.0	10

Order key

1050.34PZ.A2

Series | Full set | With integrated strain relief tiewrap plates | Pre-fitted

Note: Possible variations for assembled mounting brackets.
To receive mounting brackets with **pre-fitted** option please add index **.A1**, **.A2**, **.A3** or **.A4**.

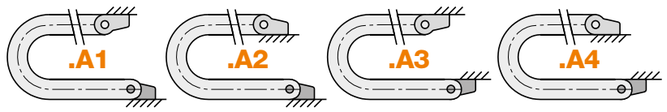

Available from stock
Upon request

Interior separation | Increase cable service life

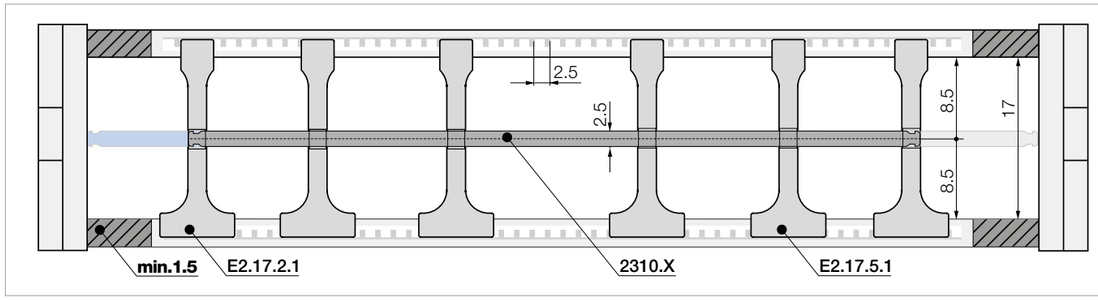

Note: Please be aware of the minimum lateral gap to the side links! **e-chain®: 1.5mm**
As standard separators are fitted every 2nd e-chain® link!

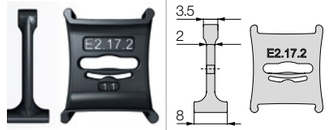

Part No.
Separator, narrow top
unassembled **E2.17.2**
assembled **E2.17.2.1**

For even faster installation

Wide on one side for high holding force, narrow on opposite side for easy cable fitting.

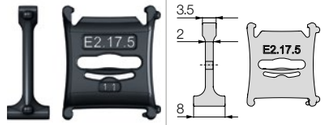

Part No.
Notch separator
unassembled **E2.17.5**
assembled **E2.17.5.1**

Locks securely in preset increments

Notch separator for exact positioning.
Recommended for side-mounted applications.

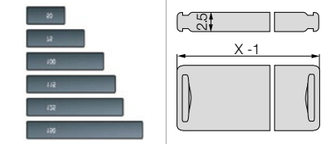

Part No.
Shelf
unassembled **2300.X**
assembled **2310.X**

Horizontal separation

Full-width shelf locks securely into separators at both ends, giving a fixed width. Can be used as full-width or modular shelving.

Width [mm]	Part No. unassembled	Part No. assembled	Width [mm]	Part No. unassembled	Part No. assembled	Width [mm]	Part No. unassembled	Part No. assembled	Width [mm]	Part No. unassembled	Part No. assembled
015	**2300.015**	**2310.015**	057	**2300.057**	**2310.057**	077	**2300.077**	**2310.077**	110	**2300.110**	**2310.110**
025	**2300.025**	**2310.025**	060	**2300.060**	**2310.060**	080	**2300.080**	**2310.080**	120	**2300.120**	**2310.120**
030	**2300.030**	**2310.030**	062	**2300.062**	**2310.062**	087	**2300.087**	**2310.087**	125	**2300.125**	**2310.125**
038	**2300.038**	**2310.038**	065	**2300.065**	**2310.065**	090	**2300.090**	**2310.090**			
040	**2300.040**	**2310.040**	070	**2300.070**	**2310.070**	100	**2300.100**	**2310.100**			
050	**2300.050**	**2310.050**	075	**2300.075**	**2310.075**	103	**2300.103**	**2310.103**			

Available from stock
Upon request



Universal connection: many mounting options with or without strain relief

Easy to open: openable along the inner and outer radius, from both sides (left or right)

Cable-friendly: very smooth contours ensure the longest cable life

Economical: E2.1 is lighter and offers more inner height than the E2/000 system with the same outer dimensions

Quiet operation: optimised integrated brake reduces noise

Long service life: due to integrated gliding surfaces even on long travels

High strength: large pin/bore and crossbar with high locking force

Since the second quarter of 2025, all sizes of the E2.1 series (inner height 10mm to 48mm) are made of the new recycled material igumid® CG LW

The strong all-rounder, easy to open - E2.1

The proven E2/000 e-chain system® has been the worldwide standard in machinery since the year 2000. All the product improvements of previous years have now been combined into the new generation of series E2.1, and with it a new standard has been set. More useable space while the same outer dimensions are the same and quieter with a longer service life and increased strength.

Benefits

- More useable interior space while the outer height is the same as the E2/000 e-chains®
- Easy to open - openable along the inner and outer radius, from both sides (left or right)
- Greater strength for unsupported applications
- Longer service life for gliding applications
- Integrated grid for interior separation in 2.5mm steps
- Cable-friendly due to smooth interior
- Quiet operation due to integrated brake
- igus® e-chain® opener for rapid opening available
- Complete interior separation range

Typical application areas

- Machine tools
- Woodworking machines
- General machinery or in all other areas

Selection table

Part No.	Inner height *hi* [mm]	Outer height *ha* [mm]	Inner width *Bi* [mm]	Outer width *Ba* [mm]	Bend radius *R* [mm]	Unsupported length ≤ [m]	Page
E2i.1 - two-piece e-chains®, crossbars openable along the inner radius, from both sides							
E2i.21	21.2	28	15 - 125	28.8 - 138.8	035 - 180	1.75	**134**
E2i.26	26	35	25 - 125	42 - 142	048 - 250	2.25	**140**
E2i.38	38	50	50 - 175	67 - 192	063 - 250	2.75	**146**
E2i.48	48	64	50 - 250	72 - 272	075 - 300	3.00	**152**
E2.1 - two-piece e-chains®, crossbars openable along the outer radius, from both sides							
E2.21	21.2	28	15 - 125	28.8 - 138.8	035 - 180	1.75	**134**
E2.26	26	35	25 - 125	42 - 142	048 - 250	2.25	**140**
E2.38	38	50	50 - 175	67 - 192	063 - 250	2.75	**146**
E2.48	48	64	50 - 250	72 - 272	075 - 300	3.00	**152**
E2C.1 - one-piece e-chains®, non-openable							
E2C.21	21.2	28	25 - 100	38.8 - 113.8	035 - 180	1.75	**134**
E2C.26	26	35	38 - 125	55 - 142	048 - 200	2.25	**140**
E2C.38	38	50	75 - 125	92 - 142	063 - 200	2.75	**146**

Technical data

General properties

Speed gliding[1] / acceleration gliding[1]	≤ 10m/s / ≤ 50m/s²
Speed FL_G/acceleration FL_G	≤ 20m/s / ≤ 200m/s²
Speed FL_B/acceleration FL_B	≤ 3m/s / ≤ 6m/s²
igumid® CG LW material - permitted temperature °C	-40°C/+120°C
Flammability class, igumid® CG LW	VDE 0304 IIC UL94-HB

1) For openable series along the inner radius in gliding applications, please consult igus®

Installation types, maximum travel lengths

Series	Unsupported	Gliding[1]	Vertical hanging	Vertical standing	Side mounted, unsupported	Rotary	Zig-zag
E2.21	≤ 3.9m	≤ 75m	≤ 20m	≤ 2.0m	≤ 0.7m	with rework	upon request
E2.26	≤ 4.25m	≤ 100m	≤ 40m	≤ 3.0m	≤ 1.0m	with rework	upon request
E2.38	≤ 5.5m	≤ 120m	≤ 50m	≤ 3.0m	≤ 1.0m	with rework	upon request
E2.48	≤ 6.0m	≤ 150m	≤ 80m	≤ 3.0m	≤ 1.0m	with rework	upon request

1) For openable series along the inner radius in gliding applications, please consult igus®

Product range



Part No. Openable along the inner radius	Part No. Openable along the outer radius	Part No. One-piece, non-openable	Inner width *Bi* [mm]	Outer width *Ba* [mm]	Weight [kg/m]
E2I.21.015.□.0	E2.21.015.□.0	E2C.21.015.□.0*	15	28.8	≈ 0.56
E2I.21.020.□.0	E2.21.020.□.0	E2C.21.020.□.0*	20	33.8	≈ 0.58
E2I.21.025.□.0	E2.21.025.□.0	E2C.21.025.□.0	25	38.8	≈ 0.60
E2I.21.038.□.0	E2.21.038.□.0	E2C.21.038.□.0	38	51.8	≈ 0.65
E2I.21.050.□.0	E2.21.050.□.0	E2C.21.050.□.0	50	63.8	≈ 0.69
E2I.21.068.□.0	E2.21.068.□.0	E2C.21.068.□.0	68	81.8	≈ 0.75
E2I.21.080.□.0	E2.21.080.□.0	E2C.21.080.□.0	80	93.8	≈ 0.81
E2I.21.100.□.0	E2.21.100.□.0	E2C.21.100.□.0	100	113.8	≈ 0.88
E2I.21.125.□.0	E2.21.125.□.0	E2C.21.125.□.0*	125	138.8	≈ 0.97

Available bend radii *R* [mm] | 035 | 038 | 048 | 063 | 075 | 100 | 125 | 145 | 180 |

*Width available upon request, please consult igus® for delivery time.

Order key

E2.21.038.180.0

Series / Type	Inner height	Width index	Bend radius	Colour index

Order example:
Complete Part No. with the required radius □ *R*. Example:
E2I.21.038.180.0 = crossbars openable along the inner radius, from both sides
E2.21.038.180.0 = crossbars openable along the outer radius, from both sides
E2C.21.038.180.0 = one-piece, non-openable
Order index for colour options ▶ **www.igus.eu/info-colours**

Available from stock
Upon request

E2.1 | Series E2i.21 / E2.21 / E2C.21

E2i.21
E2.21
E2C.21

Unsupported applications | Short travels

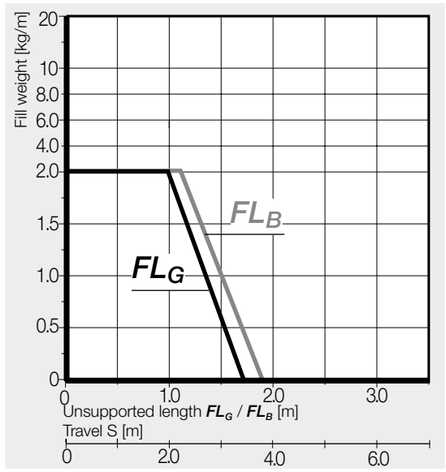

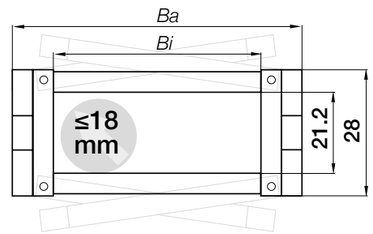

Inner height [mm]	21.2
Pitch [mm]	33.3
Links/m [pc.]	30
corresponds to [mm]	1,000
e-chain® length	$L_K = S/2 + K$

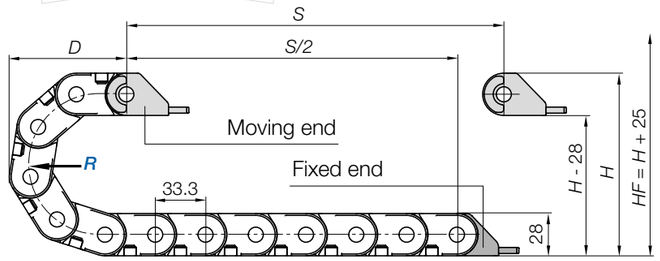

R	035	038	048	063	075	100	125	145	180
H	098	104	124	154	178	228	278	318	388
D	099	102	112	127	139	164	189	209	244
K	180	190	220	265	305	385	460	525	635

The required clearance height: $H_F = H + 25mm$ (with 1.5kg/m fill weight)

Gliding applications | For long travel lengths from 10m to max. 75m

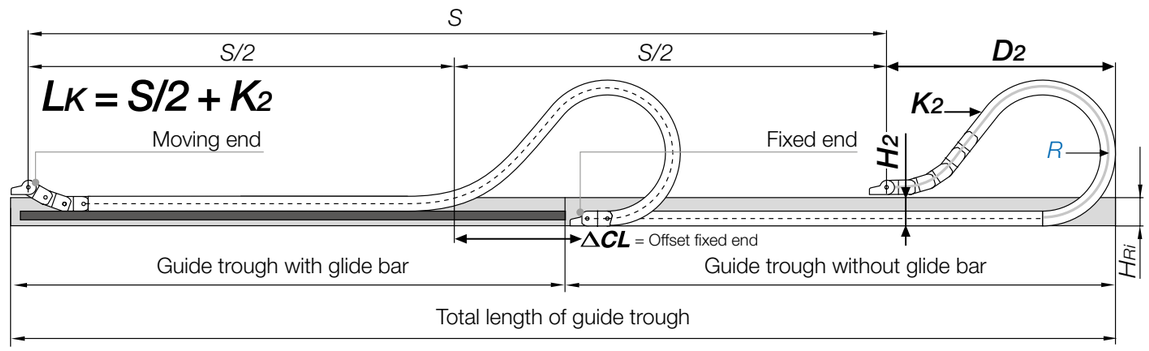

R	035	038	048	063	075	100	125	145	180
H_2	070	076	096	100	100	100	100	100	100
D_2^{+25}	100	102	112	208	255	345	490	550	745
K_2	167	200	233	333	433	600	800	933	1,200
ΔCL	–	–	–	087	122	187	307	347	507

Note: Before using series E2i on long travels please consult igus®.
In case of travels between 4 and 10m we recommend an e-chain® with a longer unsupported length.

Available from stock
Upon request

E2.1 | Series E2i.21 / E2.21 / E2C.21

Mounting brackets, polymer | Pivoting | Locking

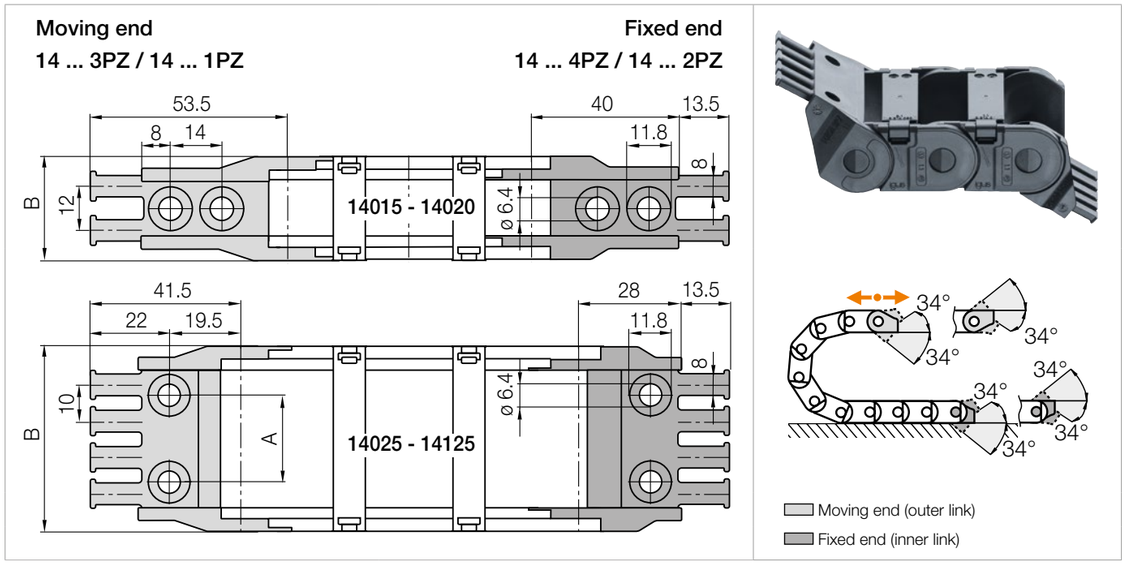

Width index	Part No. Full set Pivoting with tiewrap plates	Pivoting without tiewrap plates	Part No. Full set Locking with tiewrap plates	Locking without tiewrap plates	A [mm]	B [mm]	Number of teeth
015.	**14015.34PZ**	–	**14015.12PZ**	–	–	28.5	2
020.	**14020.34PZ**	–	**14020.12PZ**	–	–	33.5	2
025.	**14025.34PZ**	–	**14025.12PZ**	–	13	38.5	2
038.	**14038.34PZ**	–	**14038.12PZ**	–	24	51.5	4
050.	**14050.34PZ**	–	**14050.12PZ**	–	36	63.5	5
068.	**14068.34PZ**	–	**14068.12PZ**	–	54	81.5	7
080.	**14080.34PZ**	–	**14080.12PZ**	–	66	93.5	8
100.	**14100.34PZ**	–	**14100.12PZ**	–	86	113.5	10
125.	**14125.34PZ**	–	**14125.12PZ**	–	111	138.5	13

Order key

14038.34PZ.A2

Series | Full set | With integrated strain relief tiewrap plates | Pre-fitted

Note: Possible variations for assembled mounting brackets.
To receive mounting brackets with **pre-fitted** option please add index **.A1**, **.A2**, **.A3** or **.A4**.

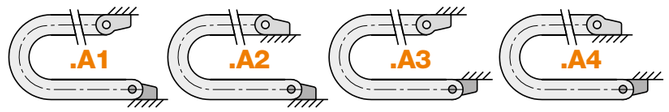

Available from stock
Upon request

E2i.21
E2.21
E2C.21

E2.1 | Series E2i.21 / E2.21 / E2C.21

Mounting brackets, polymer | Pivoting

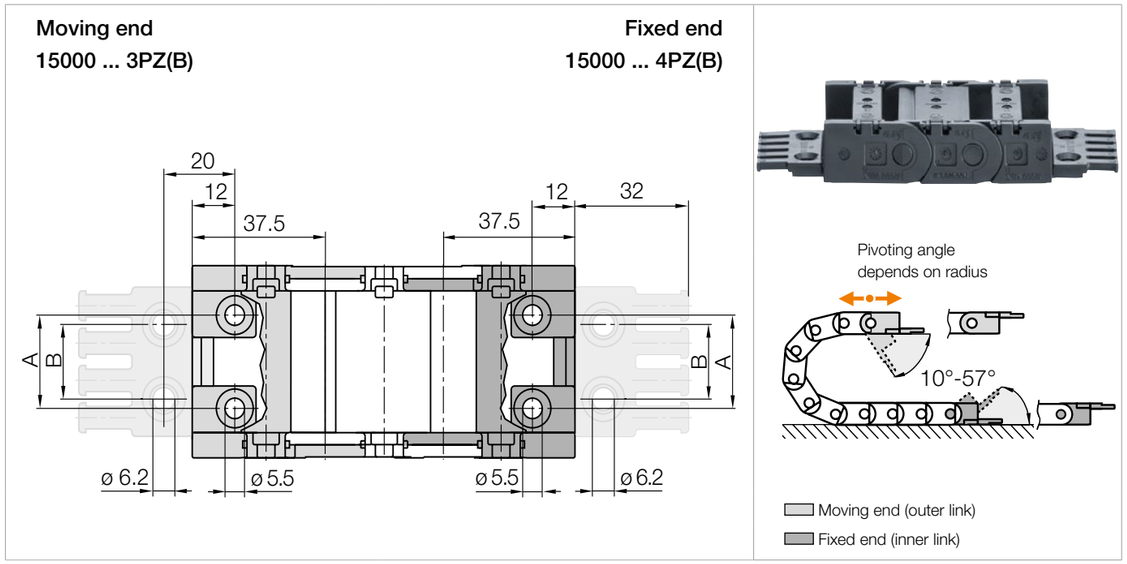

Width index	Part No. Full set Pivoting with tiewrap plates	Pivoting without tiewrap plates	Part No. Full set Locking with tiewrap plates	Locking without tiewrap plates	A [mm]	B [mm]	Number of teeth
015.	–	–	–	–	–	–	–
020.	–	–	–	–	–	–	–
025.	**15000.025.34PZB**	**15000.025.34Z**	–	–	12	15	3
038.	**15000.038.34PZB**	**15000.038.34Z**	–	–	25	20	4
050.	**15000.050.34PZB**	**15000.050.34Z**	–	–	37	30	5
068.	**15000.068.34PZB**	**15000.068.34Z**	–	–	55	40	6
080.	**15000.080.34PZB**	**15000.080.34Z**	–	–	67	60	8
100.	**15000.100.34PZB**	**15000.100.34Z**	–	–	87	80	10
125.	**15000.125.34PZB***	**15000.125.34Z***	–	–	112	100	12

*Tiewrap plate (consists of 2x2050.ZB) does not snap on but needs to be bolted down separately.

Note: Mounting brackets not to assemble at the gable end.

Order key

15000.038.34PZB.A2

Series | Width index | Full set | With integrated strain relief tiewrap plates | Pre-fitted

Note: To receive pre-fitted mounting brackets **without strain relief**, please add index **.A**. For pre-fitted variant **with strain relief** please add index **.A1**, **.A2**, **.A3** or **.A4**.

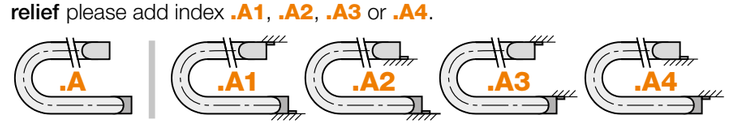

Available from stock
Upon request

Interior separation | Increase cable service life

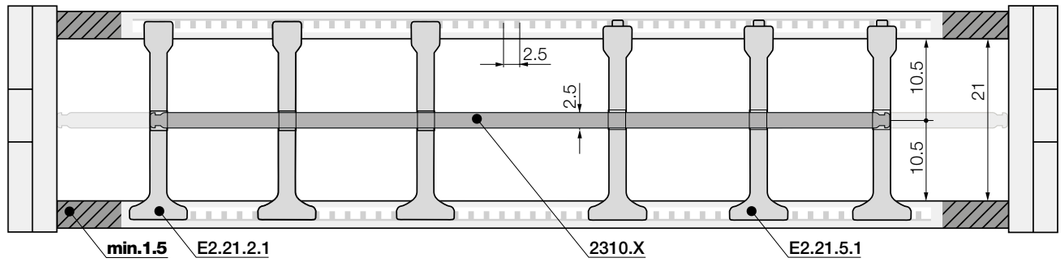

Note: Please be aware of the minimum lateral gap to the side links! **e-chain®: 1.5mm**
As standard separators are fitted every 2nd e-chain® link!



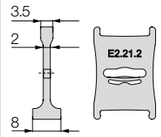

Part No.	
Separator, narrow top	
unassembled	**E2.21.2**
assembled	**E2.21.2.1**

For even faster installation

Wide on one side for high holding force, narrow on opposite side for easy cable fitting.



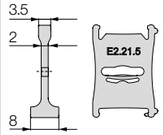

Part No.	
Notch separator	
unassembled	**E2.21.5**
assembled	**E2.21.5.1**

Locks securely in preset increments

Notch separator for exact positioning.
Recommended for side-mounted applications.

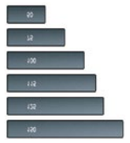

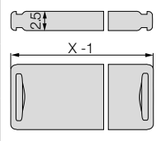

Part No.	
Shelf	
unassembled	**2300.X**
assembled	**2310.X**

Horizontal separation

Full-width shelf locks securely into separators at both ends, giving a fixed width. Can be used as full-width or modular shelving.

Width [mm]	Part No. unassembled	Part No. assembled
015	**2300.015**	**2310.015**
025	**2300.025**	**2310.025**
030	**2300.030**	**2310.030**
038	**2300.038**	**2310.038**
040	**2300.040**	**2310.040**
050	**2300.050**	**2310.050**

Width [mm]	Part No. unassembled	Part No. assembled
057	**2300.057**	**2310.057**
060	**2300.060**	**2310.060**
062	**2300.062**	**2310.062**
065	**2300.065**	**2310.065**
070	**2300.070**	**2310.070**
075	**2300.075**	**2310.075**

Width [mm]	Part No. unassembled	Part No. assembled
077	**2300.077**	**2310.077**
080	**2300.080**	**2310.080**
087	**2300.087**	**2310.087**
090	**2300.090**	**2310.090**
100	**2300.100**	**2310.100**
103	**2300.103**	**2310.103**

Width [mm]	Part No. unassembled	Part No. assembled
110	**2300.110**	**2310.110**
120	**2300.120**	**2310.120**
125	**2300.125**	**2310.125**

Available from stock
Upon request

E2.1 | Series E2i.26 / E2.26 / E2C.26

Product range

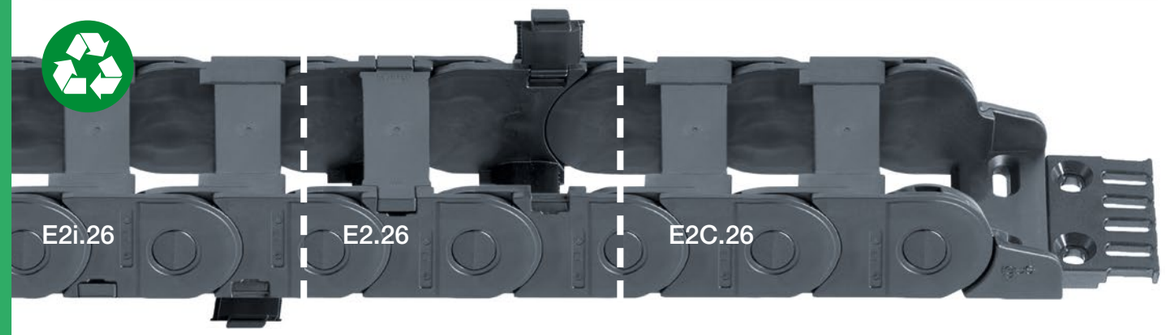

Part No. Openable along the inner radius	Part No. Openable along the outer radius	Part No. One-piece, non-openable	Inner width *Bi* [mm]	Outer width *Ba* [mm]	Weight [kg/m]
E2I.26.025.□□.0	E2.26.025.□□.0	E2C.26.025.□□.0*	25	42	≈ 0.77
E2I.26.038.□□.0	E2.26.038.□□.0	E2C.26.038.□□.0	38	55	≈ 0.84
E2I.26.057.□□.0	E2.26.057.□□.0	E2C.26.057.□□.0	57	74	≈ 0.92
E2I.26.077.□□.0	E2.26.077.□□.0	E2C.26.077.□□.0	77	94	≈ 0.99
E2I.26.089.□□.0	E2.26.089.□□.0	E2C.26.089.□□.0	89	106	≈ 1.03
E2I.26.103.□□.0	E2.26.103.□□.0	E2C.26.103.□□.0*	103	120	≈ 1.10
E2I.26.125.□□.0	E2.26.125.□□.0	E2C.26.125.□□.0	125	142	≈ 1.19

Available bend radii *R* [mm] | 048 | 055 | 075 | 100 | 125** | 150 | 175** | 200 | 225** | 250** |

*Width available upon request, please consult igus® for delivery time.

**Only for E2C.26: radius available upon request, please consult igus® for delivery time.

Order key

E2.26.038.048.0

Series / Type	Inner height	Width index	Bend radius	Colour index

Order example:

Complete Part No. with the required radius □□. Example:

E2I.26.038.048.0 = crossbars openable along the inner radius, from both sides

E2.26.038.048.0 = crossbars openable along the outer radius, from both sides

E2C.26.038.048.0 = one-piece, non-openable

Order index for colour options ▶ **www.igus.eu/info-colours**

Available from stock

Upon request

E2i.26
E2.26
E2C.26

E2.1 | Series E2i.26 / E2.26 / E2C.26

Unsupported applications | Short travels

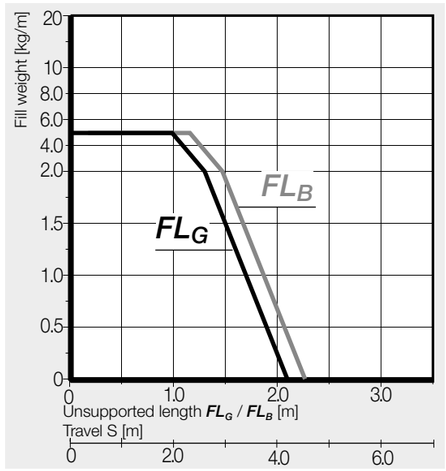

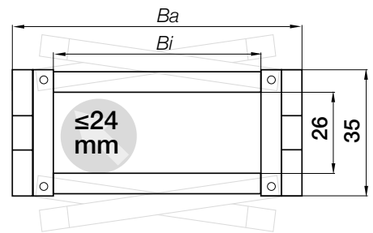

Inner height [mm]	26
Pitch [mm]	46
Links/m [pc.]	22
corresponds to [mm]	1,012
e-chain® length	$L_K = S/2 + K$

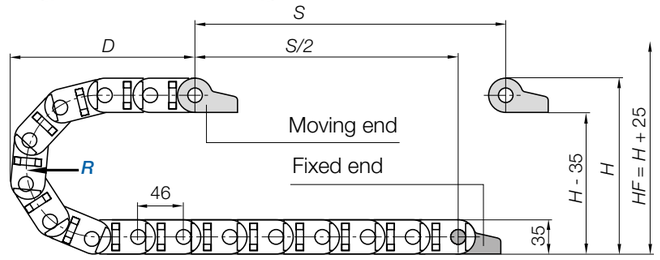

R	048	055	075	100	125**	150	175**	200	225**	250**
H	131	145	185	235	285	335	385	435	485	535
D	135	142	162	187	212	237	262	287	312	337
K	245	265	330	410	485	565	645	725	800	880

The required clearance height: $H_F = H + 25mm$ (with 1.5kg/m fill weight)

**Only for E2C.26: radius available upon request, please consult igus® for delivery time.

Gliding applications | For travel lengths from 10m to max. 100m

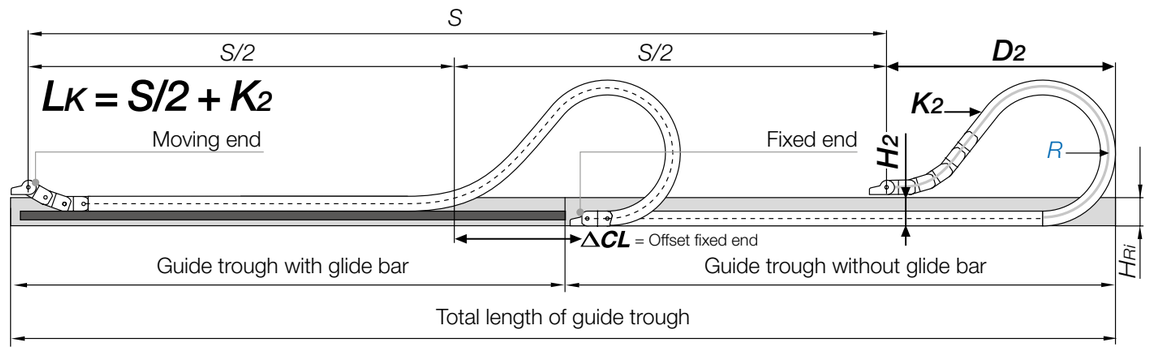

R	048	055	075	100	125**	150	175**	200	225**	250**
H_2	096	110	150	100	100	100	100	100	100	100
D_2^{+25}	135	145	162	380	440	590	755	950	1,040	1,130
K_2	245	265	330	644	736	1,012	1,242	1,472	1,610	1,794
ΔCL	–	–	–	204	244	364	504	674	754	804

Note: Before using series E2i on long travels please consult igus®.

In case of travels between 4 and 10m we recommend an e-chain® with a longer unsupported length.

**Only for E2C.26: radius available upon request, please consult igus® for delivery time.

Available from stock

Upon request

E2.1 | Series E2i.26 / E2.26 / E2C.26

Mounting brackets, polymer | Pivoting | Locking

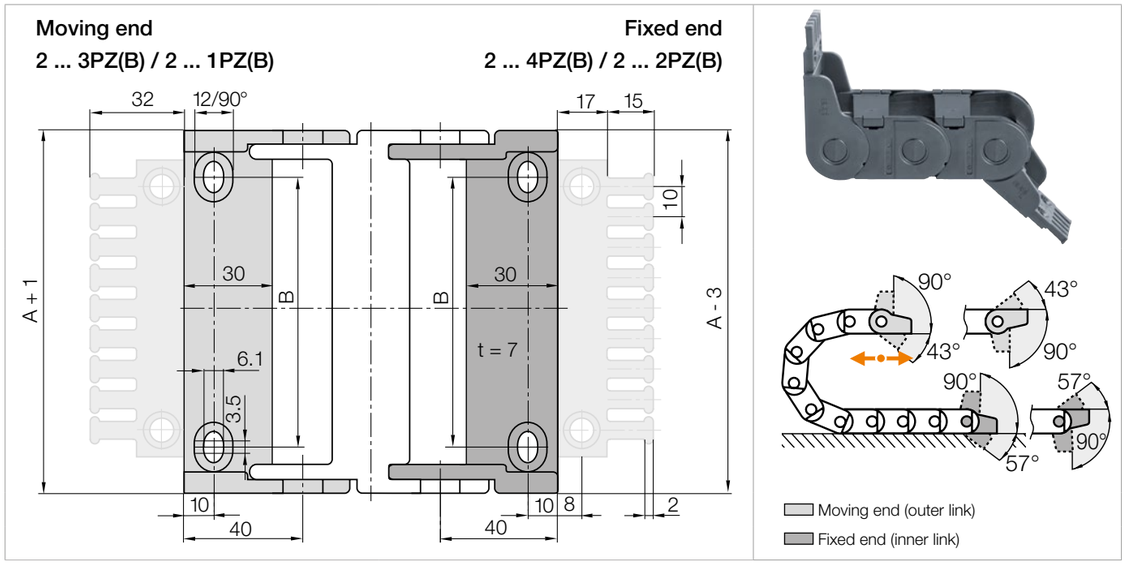

Width index	Part No. Full set Pivoting with tiewrap plates	Pivoting without tiewrap plates	Part No. Full set Locking with tiewrap plates	Locking without tiewrap plates	A [mm]	B [mm]	Number of teeth
025.	**2020.34PZB**	**2020.34PZ**	**2020.12PZB**	**2020.12PZ**	41	12	3
038.	**2030.34PZB**	**2030.34PZ**	**2030.12PZB**	**2030.12PZ**	54	25	4
057.	**2050.34PZB**	**2050.34PZ**	**2050.12PZB**	**2050.12PZ**	73	44	6
077.	**2070.34PZB**	**2070.34PZ**	**2070.12PZB**	**2070.12PZ**	93	64	8
089.	**2090.34PZB**	**2090.34PZ**	**2090.12PZB**	**2090.12PZ**	105	77	9
103.	**2100.34PZB**	**2100.34PZ**	**2100.12PZB**	**2100.12PZ**	119	90	10
125.	**2125.34PZB**	**2125.34PZ**	**2125.12PZB**	**2125.12PZ**	141	112	12

Full set with tiewrap plate + 10 cable tiewraps, please add index **K1**. Example: **2020.34PZB<u>K1</u>**

Order key

2030.34PZB.A2

Series | Full set | With integrated strain relief tiewrap plates | Pre-fitted

Note: Possible variations for assembled mounting brackets.
To receive mounting brackets with **pre-fitted** option please add index **.A1**, **.A2**, **.A3** or **.A4**.

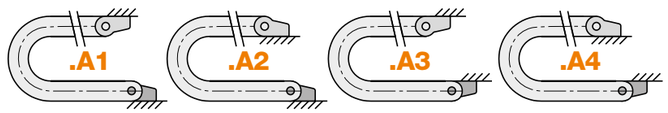

Available from stock
Upon request

E2i.26
E2.26
E2C.26

E2.1 | Series E2i.26 / E2.26 / E2C.26

KMA mounting brackets | Attachment from any side | Pivoting | Locking

Moving end		Fixed end	Front view of KMA
E2.260 ... 3(ZB)	both ends pivoting	**E2.260 ... 4(ZB)**	
E2.260 ... 5(ZB)	one end pivoting [1]	**E2.260 ... 6(ZB)**	
E2.260 ... 1(ZB)	both ends locking	**E2.260 ... 2(ZB)**	

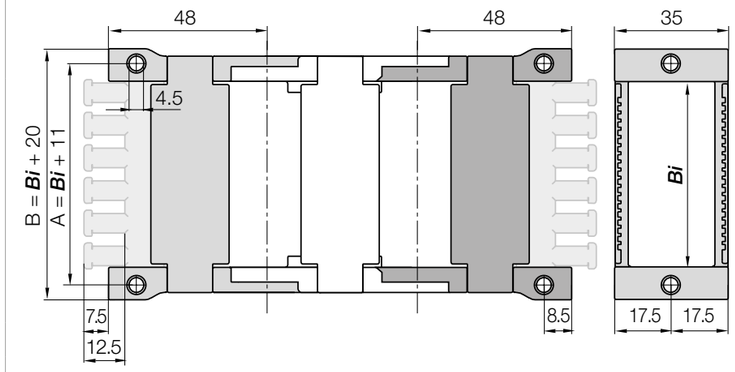

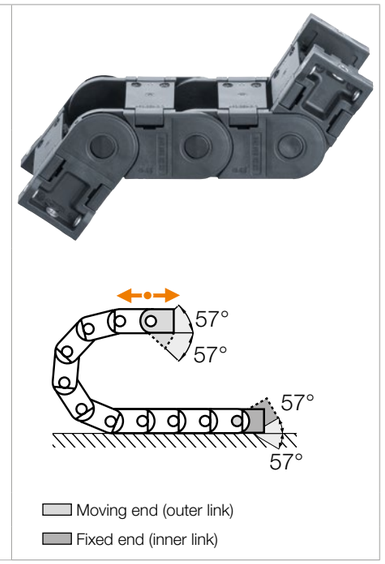

Width index	Part No. Full set Both ends pivoting with tiewrap plates	Part No. Full set One end pivoting[1] with tiewrap plates	Part No. Full set Both ends locking with tiewrap plates	A [mm]	B [mm]	*Bi* [mm]	Number of teeth
025.	**E2.260.025.34ZB**	**E2.260.025.56ZB**	**E2.260.025.12ZB**	36	45	25	3
038.	**E2.260.038.34ZB**	**E2.260.038.56ZB**	**E2.260.038.12ZB**	49	58	38	4
057.	**E2.260.057.34ZB**	**E2.260.057.56ZB**	**E2.260.057.12ZB**	68	77	57	6
077.	**E2.260.077.34ZB**	**E2.260.077.56ZB**	**E2.260.077.12ZB**	88	97	77	8
089.	**E2.260.089.34ZB**	**E2.260.089.56ZB**	**E2.260.089.12ZB**	100	109	89	9
103.	**E2.260.103.34ZB**	**E2.260.103.56ZB**	**E2.260.103.12ZB**	114	123	103	10
125.	**E2.260.125.34ZB**	**E2.260.125.56ZB**	**E2.260.125.12ZB**	136	145	125	12

1) One end pivoting only to the inner radius.

For a variant without tiewrap plates, please state part number without index **ZB**! (KMA = plastic-metal mounting bracket)

Order key

E2.260.038.34ZB.A2

Series | Width index | Full set | With integrated strain relief tiewrap plates | Pre-fitted

Note: Possible orientations for KMA mounting brackets. For mounting brackets pre-fitted **without strain relief**, please add index **.A**. For types pre-fitted **with strain relief** please add index **.A1**, **.A2**, **.A3** or **.A4**.



Available from stock
Upon request

E2.1 | Series E2i.26 / E2.26 / E2C.26

Interior separation | Increase cable service life

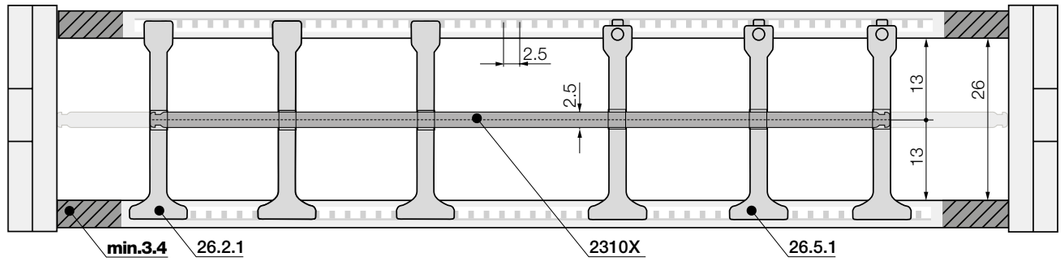

Note: Please be aware of the minimum lateral gap to the side links! **e-chain®: 3.4mm**
As standard separators are fitted every 2nd e-chain® link!



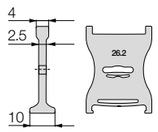

Part No.	
Separator, narrow top	
unassembled	**26.2**
assembled	**26.2.1**

For even faster installation

Wide on one side for high holding force, narrow on opposite side for easy cable fitting.



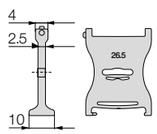

Part No.	
Notch separator	
unassembled	**26.5**
assembled	**26.5.1**

Locks securely in preset increments

Notch separator for exact positioning.
Recommended for side-mounted applications.

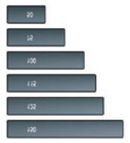

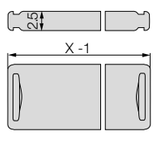

Part No.	
Shelf	
unassembled	**2300.X**
assembled	**2310.X**

Horizontal separation

Full-width shelf locks securely into separators at both ends, giving a fixed width. Can be used as full-width or modular shelving.

Width [mm]	Part No. unassembled	Part No. assembled
015	**2300.015**	**2310.015**
025	**2300.025**	**2310.025**
030	**2300.030**	**2310.030**
038	**2300.038**	**2310.038**
040	**2300.040**	**2310.040**
050	**2300.050**	**2310.050**

Width [mm]	Part No. unassembled	Part No. assembled
057	**2300.057**	**2310.057**
060	**2300.060**	**2310.060**
062	**2300.062**	**2310.062**
065	**2300.065**	**2310.065**
070	**2300.070**	**2310.070**
075	**2300.075**	**2310.075**

Width [mm]	Part No. unassembled	Part No. assembled
077	**2300.077**	**2310.077**
080	**2300.080**	**2310.080**
087	**2300.087**	**2310.087**
090	**2300.090**	**2310.090**
100	**2300.100**	**2310.100**
103	**2300.103**	**2310.103**

Width [mm]	Part No. unassembled	Part No. assembled
110	**2300.110**	**2310.110**
120	**2300.120**	**2310.120**
125	**2300.125**	**2310.125**

Available from stock
Upon request

E2.1 | Application example

Fail-safe energy chain for cable guidance in an innovative bicycle garage



With modular and automated garages in large cities, SERAAB creates new and space-saving parking options for bicycles. The French company SERAAP has developed an innovative bicycle garage to simplify CO_2-free mobility in inner cities. The special feature is a storage and retrieval unit inside the garage picks up the bicycle and places it in a defined place - which can sometimes be several metres high. The machine specialist relies on our E2.1 series energy chain systems for guiding the energy and data cables.

Product range



Part No. Openable along the inner radius	Part No. Openable along the outer radius	Part No. One-piece, non-openable	Inner width *Bi* [mm]	Outer width *Ba* [mm]	Weight [kg/m]
E2I.38.050.□.0	E2.38.050.□.0	E2C.38.050.□.0*	50	67	≈ 1.01
E2I.38.065.□.0	E2.38.065.□.0	E2C.38.065.□.0*	65	82	≈ 1.08
E2I.38.075.□.0	E2.38.075.□.0	E2C.38.075.□.0	75	92	≈ 1.12
E2I.38.090.□.0	E2.38.090.□.0	E2C.38.090.□.0*	90	107	≈ 1.19
E2I.38.100.□.0	E2.38.100.□.0	E2C.38.100.□.0	100	117	≈ 1.22
E2I.38.125.□.0	E2.38.125.□.0	E2C.38.125.□.0	125	142	≈ 1.33
E2I.38.150.□.0	E2.38.150.□.0	E2C.38.150.□.0*	150	167	≈ 1.44
E2I.38.175.□.0	E2.38.175.□.0	E2C.38.175.□.0*	175	192	≈ 1.55
Available bend radii *R* [mm] | 063 | 075 | 100 | 125**| 150 | 175**| 200 | 250**|					

*Width available upon request, please consult igus® for delivery time.

**Only for E2C.38: radius available upon request, please consult igus® for delivery time.

Order key

E2.38.065.100.0

Series / Type	Inner height	Width index	Bend radius	Colour index

Order example:
Complete Part No. with the required radius □. Example:
E2I.38.065.100.0 = crossbars openable along the inner radius, from both sides
E2.38.065.100.0 = crossbars openable along the outer radius, from both sides
E2C.38.065.100.0 = one-piece, non-openable
Order index for colour options ▶ **www.igus.eu/info-colours**

Available from stock
Upon request

E2.1 | Series E2i.38 / E2.38 / E2C.38

E2i.38
E2.38
E2C.38

Unsupported applications | Short travels

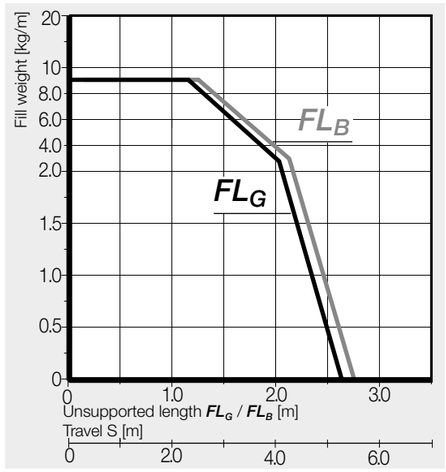

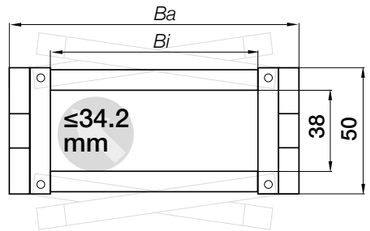

Inner height [mm]	38
Pitch [mm]	56
Links/m [pc.]	18
corresponds to [mm]	1,008
e-chain® length	$L_K = S/2 + K$

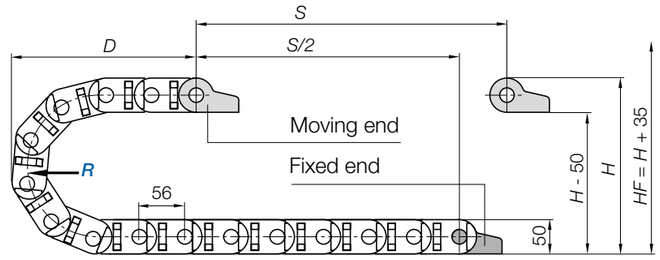

R	063	075	100	125**	150	175**	200	250**
H	176	200	250	300	350	400	450	550
D	172	184	209	234	259	284	309	359
K	310	350	430	505	585	665	745	900

The required clearance height: $H_F = H$ **+ 35mm** (with 2.0kg/m fill weight)

**Only for E2C.38: radius available upon request, please consult igus® for delivery time.

Gliding applications | For travel lengths from 10m to max. 120m

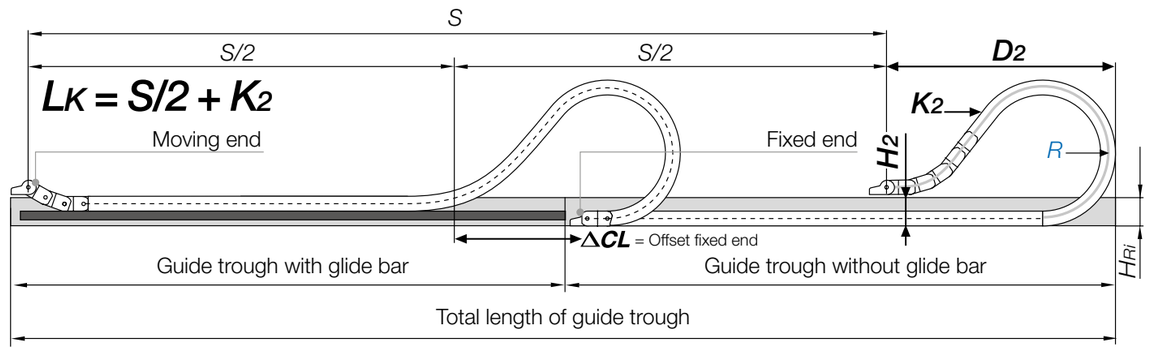

R	063	075	100	125**	150	175**	200	250**
H_2	176	200	166	166	166	166	166	166
D_2^{+25}	172	184	395	510	545	700	805	995
K_2	310	350	616	784	896	1,120	1,288	1,624
ΔCL	–	–	144	244	244	374	464	594

Note: Before using series E2i on long travels please consult igus®.
In case of travels between 5 and 10m we recommend an e-chain® with a longer unsupported length.
**Only for E2C.38: radius available upon request, please consult igus® for delivery time.

Available from stock
Upon request

E2.1 | Series E2i.38 / E2.38 / E2C.38

Mounting brackets, polymer | Pivoting | Locking

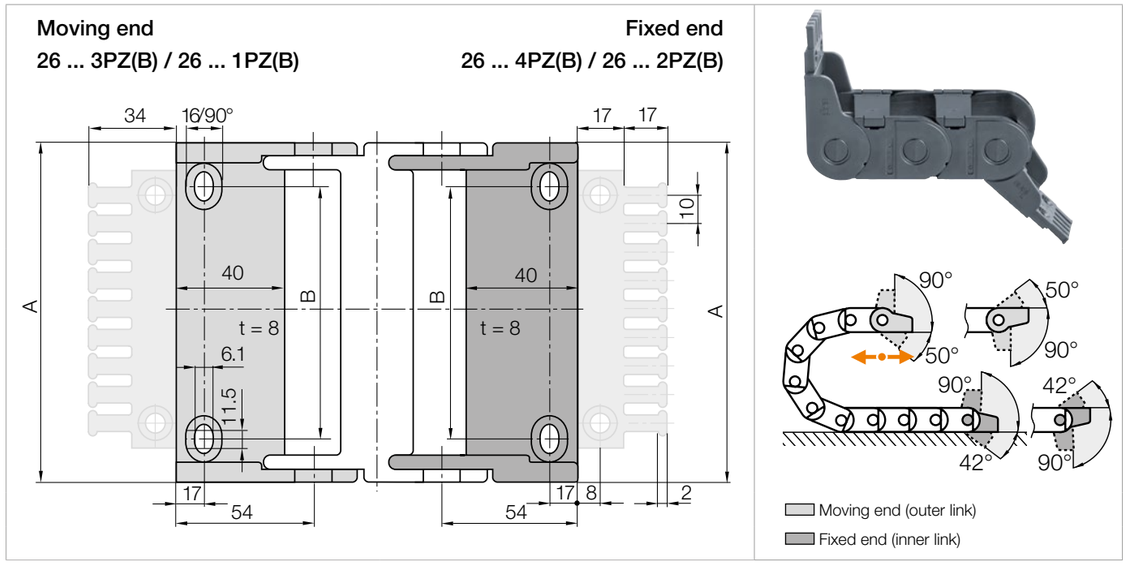

Width index	Part No. Full set Pivoting with tiewrap plates	Pivoting without tiewrap plates	Part No. Full set Locking with tiewrap plates	Locking without tiewrap plates	A [mm]	B [mm]	Number of teeth
050.	**2605.34PZB**	**2605.34PZ**	**2605.12PZB**	**2605.12PZ**	68	30	5
065.	**2606.34PZB**	**2606.34PZ**	**2606.12PZB**	**2606.12PZ**	83	45	5
075.	**2607.34PZB**	**2607.34PZ**	**2607.12PZB**	**2607.12PZ**	93	55	7
090.	**2609.34PZB**	**2609.34PZ**	**2609.12PZB**	**2609.12PZ**	108	70	9
100.	**2610.34PZB**	**2610.34PZ**	**2610.12PZB**	**2610.12PZ**	118	80	10
125.	**2612.34PZB**	**2612.34PZ**	**2612.12PZB**	**2612.12PZ**	143	105	12
150.	**2615.34PZB**	**2615.34PZ**	**2615.12PZB**	**2615.12PZ**	168	130	15
175.	**2617.34PZB**	**2617.34PZ**	**2617.12PZB**	**2617.12PZ**	193	155	17

Full set with tiewrap plate + 10 cable tiewraps, please add index **K1**. Example: **2605.34PZB<u>K1</u>**

Order key

2605.34PZB.A2

Series	Full set	With integrated strain relief tiewrap plates	Pre-fitted

Note: Possible variations for assembled mounting brackets.
To receive mounting brackets with **pre-fitted** option please add index **.A1**, **.A2**, **.A3** or **.A4**.

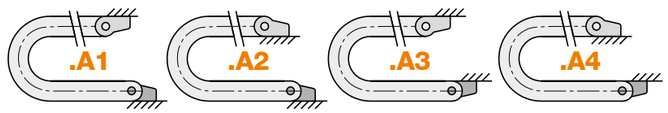

Available from stock
Upon request

E2i.38
E2.38
E2C.38

E2.1 | Series E2i.38 / E2.38 / E2C.38

KMA mounting brackets | Attachment from any side | Pivoting | Locking

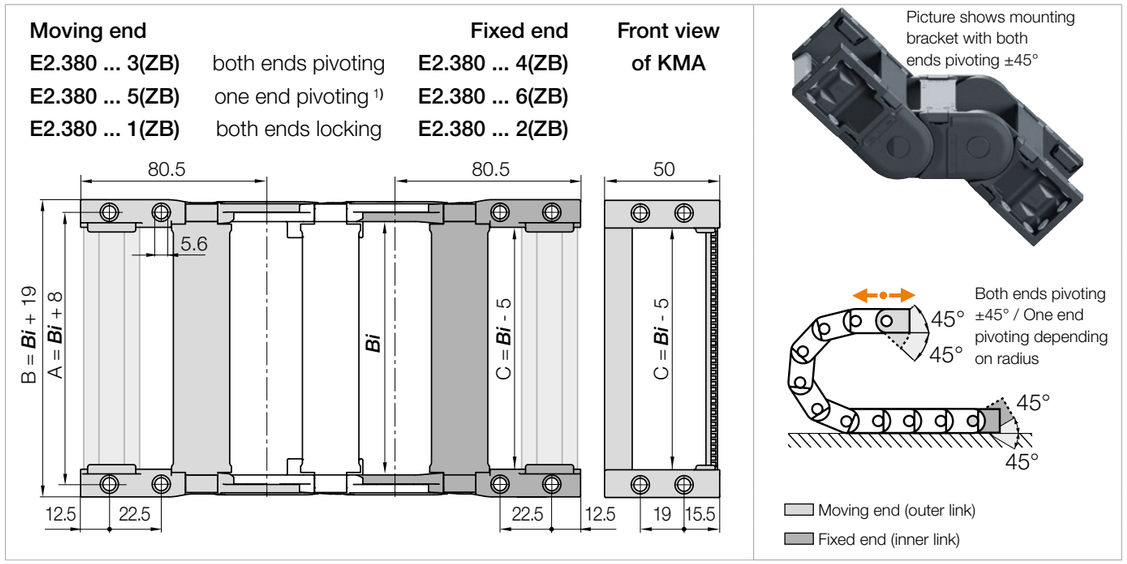

Width index	Part No. Full set Both ends pivoting C-profile option	One end pivoting[1] C-profile option	Both ends locking C-profile option	A [mm]	B [mm]	C [mm]	*Bi* [mm]
050.	**E2.380.050.34.☐**	**E2.380.050.56.☐**	**E2.380.050.12.☐**	58	69	45	50
065.	**E2.380.065.34.☐**	**E2.380.065.56.☐**	**E2.380.065.12.☐**	73	84	60	65
075.	**E2.380.075.34.☐**	**E2.380.075.56.☐**	**E2.380.075.12.☐**	83	94	70	75
090.	**E2.380.090.34.☐**	**E2.380.090.56.☐**	**E2.380.090.12.☐**	98	109	85	90
100.	**E2.380.100.34.☐**	**E2.380.100.56.☐**	**E2.380.100.12.☐**	108	119	95	100
125.	**E2.380.125.34.☐**	**E2.380.125.56.☐**	**E2.380.125.12.☐**	133	144	120	125
150.	**E2.380.150.34.☐**	**E2.380.150.56.☐**	**E2.380.150.12.☐**	158	169	145	150
175.	**E2.380.175.34.☐**	**E2.380.175.56.☐**	**E2.380.175.12.☐**	183	194	170	175

1) One end pivoting only to the inner radius.

For the C-profile option please add index **.C**. (KMA = polymer metal mounting bracket)

Order key

E2.380.050.34.C.A2

Series	Width index	Full set	C-profile option	Pre-fitted

Note: Possible orientations for KMA mounting brackets. For mounting brackets pre-fitted **without C-profile**, please add index **.A**. For types pre-fitted **with C-profile** please add index **.A1**, **.A2**, **.A3** or **.A4**.



Available from stock
Upon request

E2.1 | Series E2i.38 / E2.38 / E2C.38

Interior separation | Increase cable service life

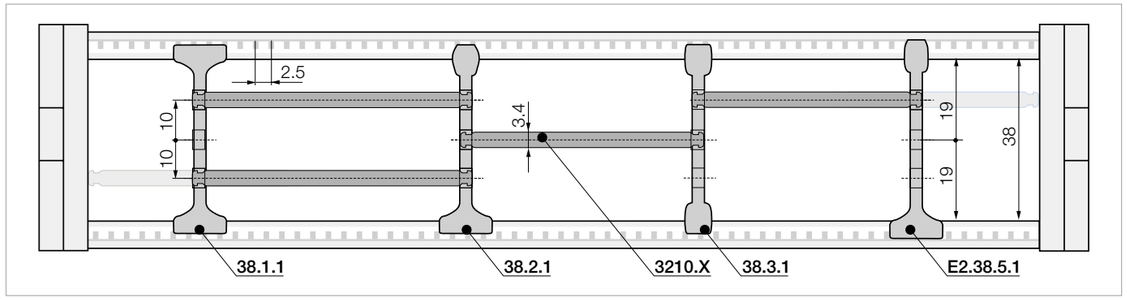

No lateral gap to side links necessary.
As standard separators are fitted every 2nd e-chain® link!



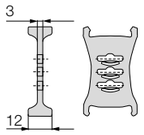

Part No.	
Standard separator	
unassembled	**38.1**
assembled	**38.1.1**

For all applications

Standard separator with a wide base for maximum holding force.



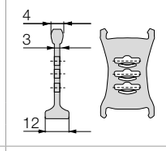

Part No.	
Separator, narrow top	
unassembled	**38.2**
assembled	**38.2.1**

For even faster installation

Wide on one side for high holding force, narrow on opposite side for easy cable fitting.



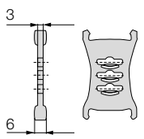

Part No.	
Separator, narrow	
unassembled	**38.3**
assembled	**38.3.1**

For a large number of thin cables

Separator with a narrow base for a large number of thin cables side by side. Saves space.



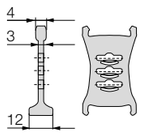

Part No.	
Notch separator	
unassembled	**E2.38.5**
assembled	**E2.38.5.1**

Locks securely in preset increments

Notch separator for exact positioning.
Recommended for side-mounted applications.

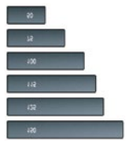

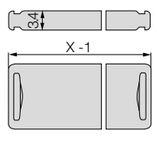

Part No.	
Shelf	
unassembled	**3200.X**
assembled	**3210.X**

Horizontal separation

Full-width shelf locks securely into separators at both ends, giving a fixed width. Can be used as full-width or modular shelving.

Width [mm]	Part No. unassembled	Part No. assembled
050	**3200.050**	**3210.050**
075	**3200.075**	**3210.075**
100	**3200.100**	**3210.100**

Width [mm]	Part No. unassembled	Part No. assembled
115	**3200.115**	**3210.115**
125	**3200.125**	**3210.125**
150	**3200.150**	**3210.150**

Width [mm]	Part No. unassembled	Part No. assembled
175	**3200.175**	**3210.175**
200	**3200.200**	**3210.200**
225	**3200.225**	**3210.225**

Width [mm]	Part No. unassembled	Part No. assembled
250	**3200.250**	**3210.250**

Available from stock
Upon request

E2.1 | Series E2i.38 / E2.38 / E2C.38

E2i.38
E2.38
E2C.38

Interior separation | To allow faster filling

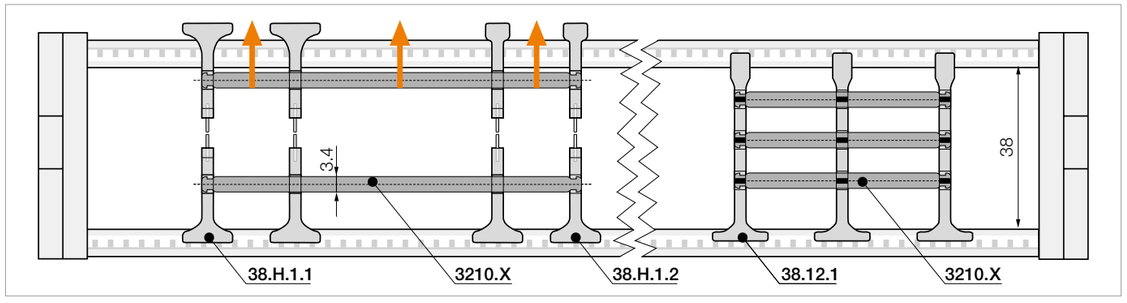

No lateral gap to side links necessary.
As standard separators are fitted every 2nd e-chain® link!



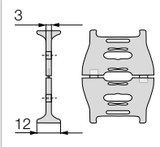

Part No.	
Split separator, wide top	
unassembled	**38.H.1**
assembled	**38.H.1.1**



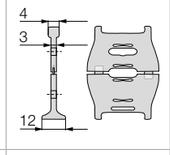

Part No.	
Split separator, narrow top	
unassembled	**38.H.2**
assembled	**38.H.2.1**

Split separators

In order to fill e-chains® more easily and effectively, these separators can be split in the middle. This allows easier access to middle shelf partitions. Fast assembly and easy retrofit. 2 types available: with wide or narrow top.



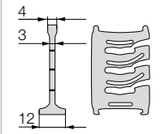

Part No.	
Lean separator	
unassembled	**38.12**
assembled	**38.12.1**

Lean separators[1)]

Quick fitting of shelves in several layers. Enables extremely fast replacement of individual cables in very full e-chains®. Only suitable for e-chains®.



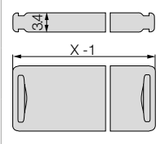

Part No.	
Shelf	
unassembled	**3200.X**
assembled	**3210.X**

Horizontal separation

Full-width shelf locks securely into separators at both ends, giving a fixed width. Can be used as full-width or modular shelving.

Width [mm]	Part No. unassembled	Part No. assembled
050	**3200.050**	**3210.050**
075	**3200.075**	**3210.075**
100	**3200.100**	**3210.100**

Width [mm]	Part No. unassembled	Part No. assembled
115	**3200.115**	**3210.115**
125	**3200.125**	**3210.125**
150	**3200.150**	**3210.150**

Width [mm]	Part No. unassembled	Part No. assembled
175	**3200.175**	**3210.175**
200	**3200.200**	**3210.200**
225	**3200.225**	**3210.225**

Width [mm]	Part No. unassembled	Part No. assembled
250	**3200.250**	**3210.250**



Lean separator for even faster filling: quickly insert several layers of cables into the e-chain® and reduce the installation time by up to 50%. Measured on a 4m long e-chain® fitted with 12 cables. **1) Note: Please combine a maximum of four lean separators with one shelf. Not suitable for side-mounted e-chains®!**

Available from stock
Upon request

Product range

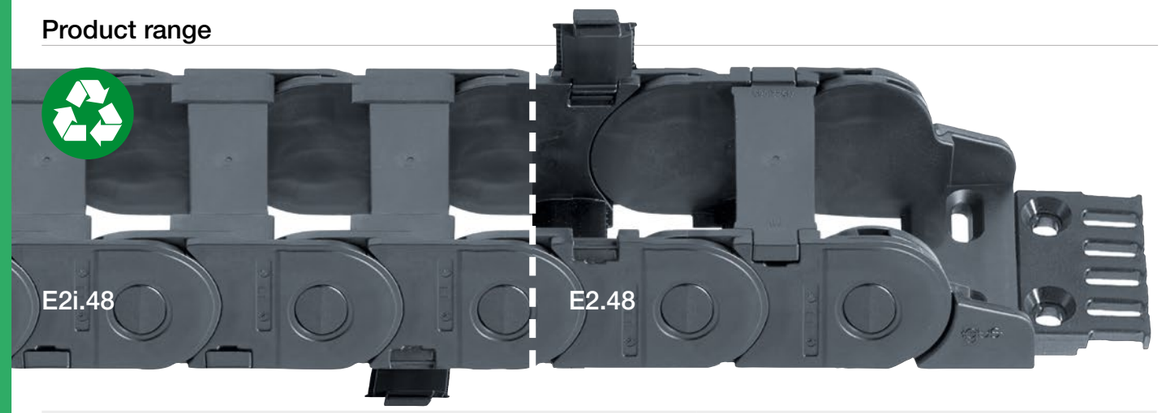

Part No. Openable along the inner radius	Part No. Openable along the outer radius	Inner width *Bi* [mm]	Outer width *Ba* [mm]	Weight [kg/m]
E2I.48.050.□.0	E2.48.050.□.0	50	72	≈ 1.77
E2I.48.075.□.0	E2.48.075.□.0	75	97	≈ 1.86
E2I.48.100.□.0	E2.48.100.□.0	100	122	≈ 2.00
E2I.48.115.□.0	E2.48.115.□.0	115	137	≈ 2.06
E2I.48.125.□.0	E2.48.125.□.0	125	147	≈ 2.12
E2I.48.150.□.0	E2.48.150.□.0	150	172	≈ 2.24
E2I.48.175.□.0	E2.48.175.□.0	175	197	≈ 2.36
E2I.48.200.□.0	E2.48.200.□.0	200	222	≈ 2.48
E2I.48.225.□.0	E2.48.225.□.0	225	247	≈ 2.60
E2I.48.250.□.0	E2.48.250.□.0	250	272	≈ 2.72

Available bend radii *R* [mm] | 075 | 100 | 125 | 150 | 175 | 200 | 250 | 300 |

Order key

E2.48.075.075.0

Series / Type | Inner height | Width index | Bend radius | Colour index

Order example:
Complete Part No. with the required radius □. Example:
E2I.48.075.075.0 = crossbars openable along the inner radius, from both sides
E2.48.075.075.0 = crossbars openable along the outer radius, from both sides
Order index for colour options ▶ **www.igus.eu/info-colours**

Available from stock
Upon request

E2.1 | Series E2i.48 / E2.48

E2i.48
E2.48

Unsupported applications | Short travels

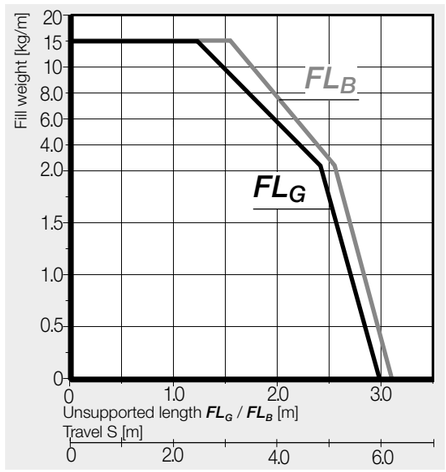

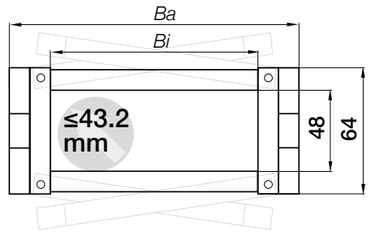

Inner height [mm]	48
Pitch [mm]	67
Links/m [pc.]	15
corresponds to [mm]	1,005
e-chain® length	$L_K = S/2 + K$

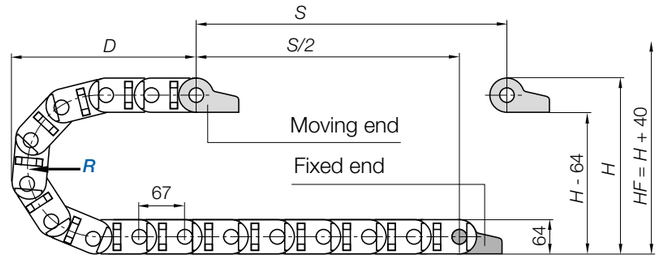

R	075	100	125	150	175	200	250	300
H	214	264	314	364	414	464	564	664
D	208	233	258	283	308	333	383	433
K	370	450	530	610	685	765	920	1,080

The required clearance height: $H_F = H + 40$mm (with 2.5kg/m fill weight)

Gliding applications | For travel lengths from 10m to max. 150m

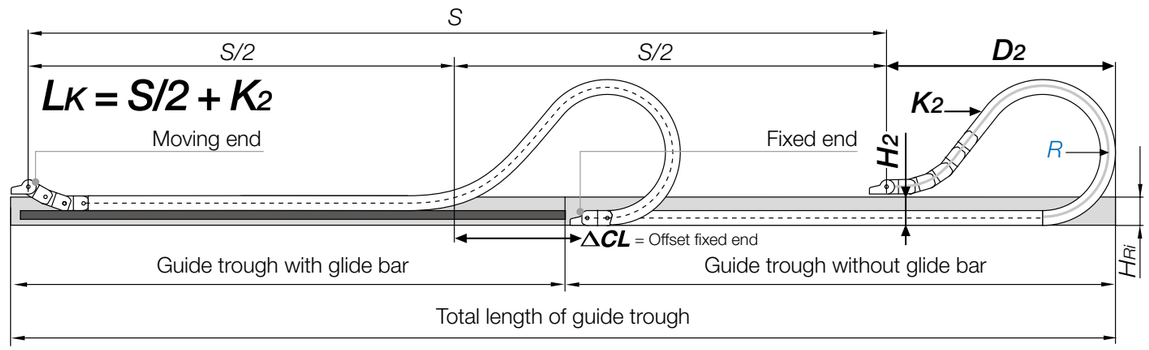

R	075	100	125	150	175	200	250	300
H_2	214	264	186	186	186	186	186	186
D_2^{+25}	208	233	475	570	725	780	1,010	1,150
K_2	370	450	804	1,005	1,072	1,340	1,675	1,943
ΔCL	–	–	233	303	433	463	643	733

Note: Before using series E2i on long travels please consult igus®.
In case of travels between 6 and 10m we recommend an e-chain® with a longer unsupported length.

Available from stock
Upon request

Mounting brackets, polymer | Pivoting | Locking

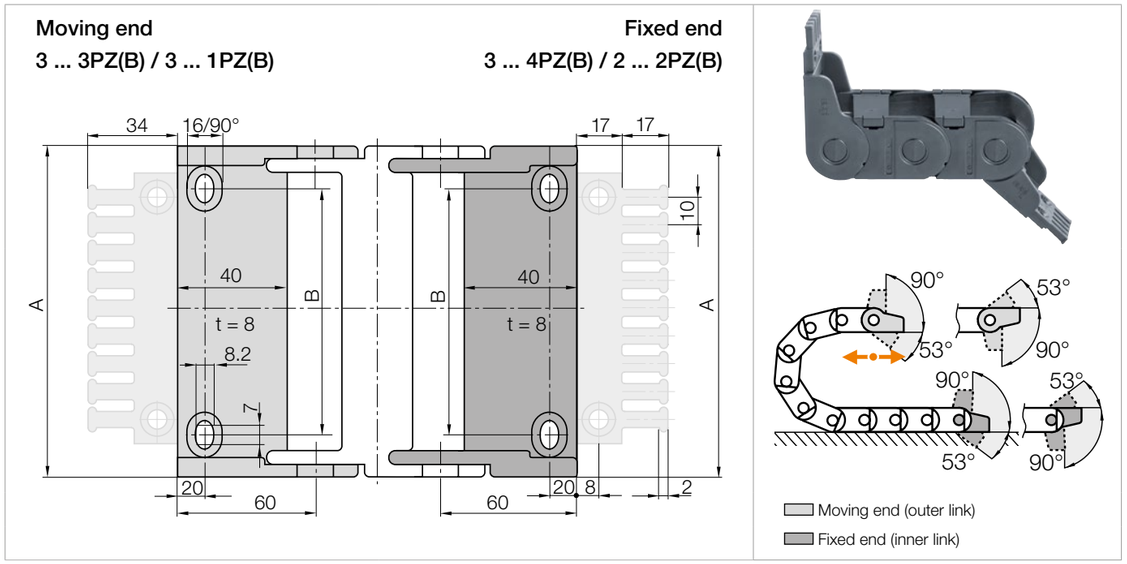

Width index	Part No. Full set Pivoting with tiewrap plates	Pivoting without tiewrap plates	Part No. Full set Locking with tiewrap plates	Locking without tiewrap plates	A [mm]	B [mm]	Number of teeth
050.	**3050.34PZB**	**3050.34PZ**	**3050.12PZB**	**3050.12PZ**	71	28	5
075.	**3075.34PZB**	**3075.34PZ**	**3075.12PZB**	**3075.12PZ**	96	53	7
100.	**3100.34PZB**	**3100.34PZ**	**3100.12PZB**	**3100.12PZ**	121	78	10
115.	**3115.34PZB**	**3115.34PZ**	**3115.12PZB**	**3115.12PZ**	136	93	11
125.	**3125.34PZB**	**3125.34PZ**	**3125.12PZB**	**3125.12PZ**	146	103	12
150.	**3150.34PZB**	**3150.34PZ**	**3150.12PZB**	**3150.12PZ**	171	128	15
175.	**3175.34PZB**	**3175.34PZ**	**3175.12PZB**	**3175.12PZ**	196	153	17
200.	**3200.34PZB**	**3200.34PZ**	**3200.12PZB**	**3200.12PZ**	221	178	20
225.	**3225.34PZB**	**3225.34PZ**	**3225.12PZB**	**3225.12PZ**	246	203	22
250.	**3250.34PZB**	**3250.34PZ**	**3250.12PZB**	**3250.12PZ**	271	228	25

Full set with tiewrap plate + 10 cable tiewraps, please add index **K1**. Example: **3275.34PZBK1**

Order key

3075.34PZB.A2

Series	Full set	With integrated strain relief tiewrap plates	Pre-fitted

Note: Possible variations for assembled mounting brackets.
To receive mounting brackets with **pre-fitted** option please add index **.A1**, **.A2**, **.A3** or **.A4**.

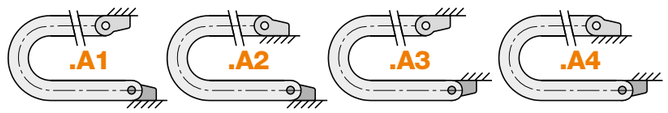

Available from stock
Upon request

KMA mounting brackets | Attachment from any side | Pivoting | Locking

Moving end		Fixed end	Front view of KMA
E2.480 ... 3(ZB)	both ends pivoting	**E2.480 ... 4(ZB)**	
E2.480 ... 5(ZB)	one end pivoting [1]	**E2.480 ... 6(ZB)**	
E2.480 ... 1(ZB)	both ends locking	**E2.480 ... 2(ZB)**	

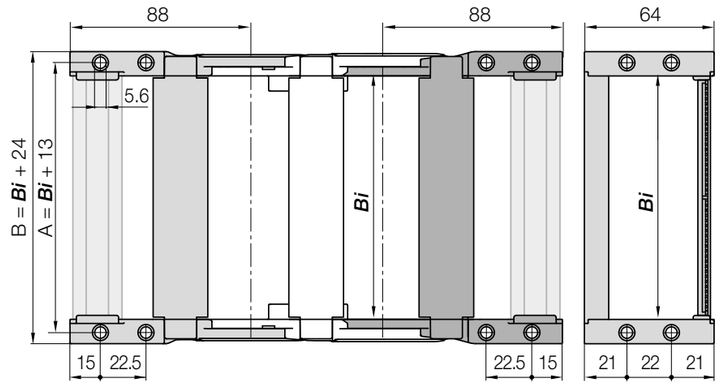

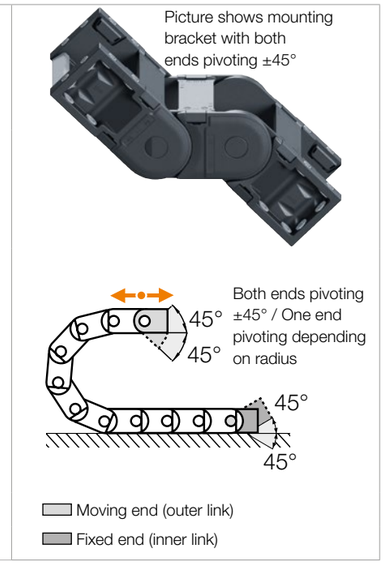

Width index	Part No. Full set Both ends pivoting C-profile option	One end pivoting[1] C-profile option	Both ends locking C-profile option	A [mm]	B [mm]	*Bi* [mm]
050.	**E2.480.050.34.☐**	**E2.480.050.56.☐**	**E2.480.050.12.☐**	63	74	50
075.	**E2.480.075.34.☐**	**E2.480.075.56.☐**	**E2.480.075.12.☐**	88	99	75
100.	**E2.480.100.34.☐**	**E2.480.100.56.☐**	**E2.480.100.12.☐**	113	124	100
115.	**E2.480.115.34.☐**	**E2.480.115.56.☐**	**E2.480.115.12.☐**	128	139	115
125.	**E2.480.125.34.☐**	**E2.480.125.56.☐**	**E2.480.125.12.☐**	138	149	125
150.	**E2.480.150.34.☐**	**E2.480.150.56.☐**	**E2.480.150.12.☐**	163	174	150
175.	**E2.480.175.34.☐**	**E2.480.175.56.☐**	**E2.480.175.12.☐**	188	199	175
200.	**E2.480.200.34.☐**	**E2.480.200.56.☐**	**E2.480.200.12.☐**	213	224	200
225.	**E2.480.225.34.☐**	**E2.480.225.56.☐**	**E2.480.225.12.☐**	238	249	225
250.	**E2.480.250.34.☐**	**E2.480.250.56.☐**	**E2.480.250.12.☐**	263	274	250

1) One end pivoting only to the inner radius.

For the C-profile option please add index **.C**. (KMA = polymer metal mounting bracket)

Order key

E2.480.075.34.C.A2

Series	Width index	Full set	C-profile option	Pre-fitted

Note: Possible orientations for KMA mounting brackets. For mounting brackets pre-fitted **without C-profile**, please add index **.A**. For types pre-fitted **with C-profile** please add index **.A1**, **.A2**, **.A3** or **.A4**.

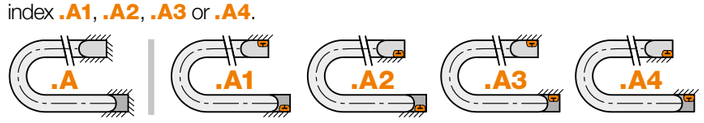

Available from stock
Upon request

E2.1 | Series E2i.48 / E2.48

Interior separation | Increase cable service life

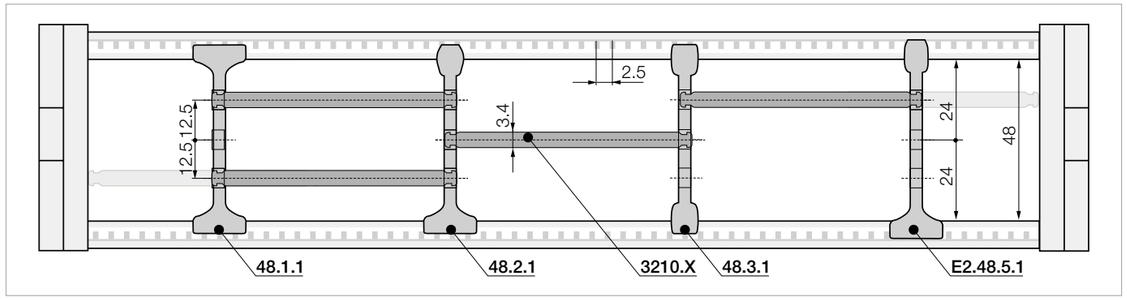

No lateral gap to side links necessary.
As standard separators are fitted every 2nd e-chain® link!



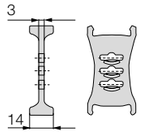

Part No.	
Standard separator	
unassembled	**48.1**
assembled	**48.1.1**

For all applications

Standard separator with a wide base for maximum holding force.



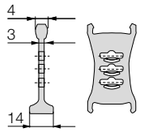

Part No.	
Separator, narrow top	
unassembled	**48.2**
assembled	**48.2.1**

For even faster installation

Wide on one side for high holding force, narrow on opposite side for easy cable fitting.



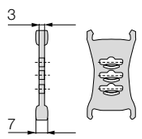

Part No.	
Separator, narrow	
unassembled	**48.3**
assembled	**48.3.1**

For a large number of thin cables

Separator with a narrow base for a large number of thin cables side by side. Saves space.



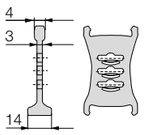

Part No.	
Notch separator	
unassembled	**E2.48.5**
assembled	**E2.48.5.1**

Locks securely in preset increments

Notch separator for exact positioning.
Recommended for side-mounted applications.

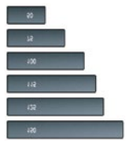

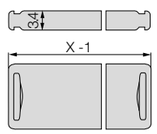

Part No.	
Shelf	
unassembled	**3200.X**
assembled	**3210.X**

Horizontal separation

Full-width shelf locks securely into separators at both ends, giving a fixed width. Can be used as full-width or modular shelving.

Width [mm]	Part No. unassembled	Part No. assembled
050	**3200.050**	**3210.050**
075	**3200.075**	**3210.075**
100	**3200.100**	**3210.100**

Width [mm]	Part No. unassembled	Part No. assembled
115	**3200.115**	**3210.115**
125	**3200.125**	**3210.125**
150	**3200.150**	**3210.150**

Width [mm]	Part No. unassembled	Part No. assembled
175	**3200.175**	**3210.175**
200	**3200.200**	**3210.200**
225	**3200.225**	**3210.225**

Width [mm]	Part No. unassembled	Part No. assembled
250	**3200.250**	**3210.250**

Available from stock
Upon request

E2.1 | Series E2i.48 / E2.48

E2i.48
E2.48

Interior separation | To allow faster filling

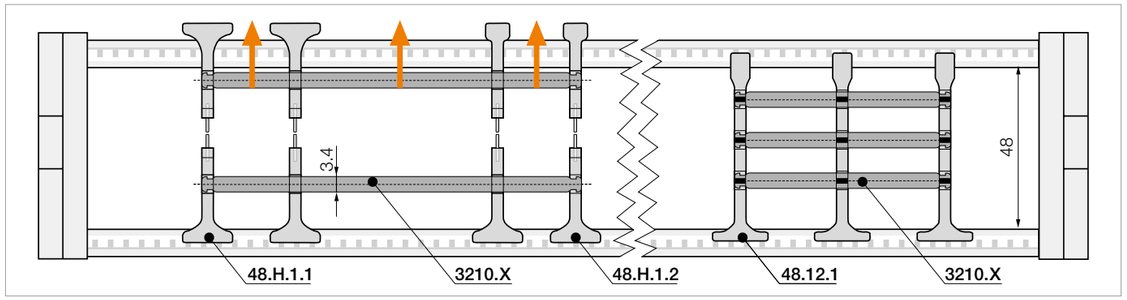

No lateral gap to side links necessary.
As standard separators are fitted every 2nd e-chain® link!



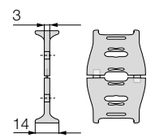

Part No.	
Split separator, wide top	
unassembled	**48.H.1**
assembled	**48.H.1.1**



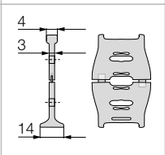

Part No.	
Split separator, narrow top	
unassembled	**48.H.2**
assembled	**48.H.2.1**

Split separators

In order to fill e-chains® more easily and effectively, these separators can be split in the middle. This allows easier access to middle shelf partitions. Fast assembly and easy retrofit. 2 types available: with wide or narrow top.



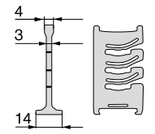

Part No.	
Lean separator	
unassembled	**48.12**
assembled	**48.12.1**

Lean separators[1)]

Quick fitting of shelves in several layers. Enables extremely fast replacement of individual cables in very full e-chains®. Only suitable for e-chains®.

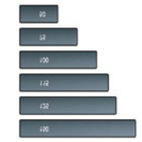

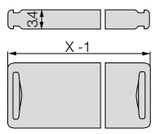

Part No.	
Shelf	
unassembled	**3200.X**
assembled	**3210.X**

Horizontal separation

Full-width shelf locks securely into separators at both ends, giving a fixed width. Can be used as full-width or modular shelving.

Width [mm]	Part No. unassembled	Part No. assembled
050	**3200.050**	**3210.050**
075	**3200.075**	**3210.075**
100	**3200.100**	**3210.100**

Width [mm]	Part No. unassembled	Part No. assembled
115	**3200.115**	**3210.115**
125	**3200.125**	**3210.125**
150	**3200.150**	**3210.150**

Width [mm]	Part No. unassembled	Part No. assembled
175	**3200.175**	**3210.175**
200	**3200.200**	**3210.200**
225	**3200.225**	**3210.225**

Width [mm]	Part No. unassembled	Part No. assembled
250	**3200.250**	**3210.250**



Lean separator for even faster filling: quickly insert several layers of cables into the e-chain® and reduce the installation time by up to 50%. Measured on a 4m long e-chain® fitted with 12 cables. **1) Note: Please combine a maximum of four lean separators with one shelf. Not suitable for side-mounted e-chains®!**

Available from stock
Upon request

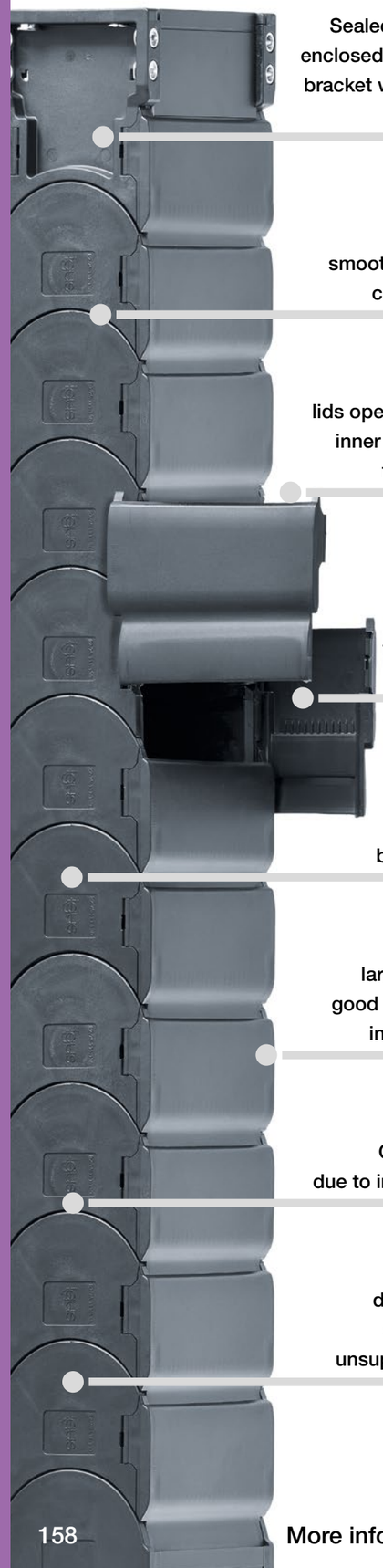

Protection against dust and dirt ingress and easily openable - R2.1

Cost-effective, robust e-tubes with an inner height of 26, 40, 48 or 75mm. Openable and removable lids along inner or outer radius, openable from both sides. Designed to provide a tight seal, with strong double stop-dogs for high fill weights and unsupported lengths.

Benefits

- Very light, ideal for high dynamics
- Large inner height and therefore cost-effective
- Cables are protected from swarf
- Easy to fill, lids openable from both sides along the inner or outer radius
- Low noise operation due to integrated brake
- Integrated separator, recommended for side-mounted applications

Typical application areas

- Machine tools
- Woodworking machines
- Textile machines
- General machinery, etc.
- In all areas with dirt and swarf

Selection table

Part No.	Inner height *hi* [mm]	Outer height *ha* [mm]	Inner width *Bi* [mm]	Outer width *Ba* [mm]	Bend radius *R* [mm]	Unsupported length ≤ [m]	Page
R2i.1 - lids openable along the inner radius, from both sides							
R2i.26	26	36	25 - 130	41 - 146	060 - 250	2.00	**160**
R2i.40	40	54	50 - 175	66.2 - 191.2	080 - 250	2.75	**164**
R2i.48	48	64	100 - 250	120 - 270	100 - 300	2.75	**168**
R2.1 - lids openable along the outer radius, from both sides							
R2.26	26	36	38 - 130	54 - 146	060 - 250	2,00	**160**
R2.40	40	54	50 - 175	66.2 - 191.2	080 - 250	2,75	**164**
R2.48	48	64	75 - 250	95 - 270	100 - 300	2,75	**168**
R2.75	75	90	111 - 200	135 - 224	130 - 250	3,00	**172**

Technical data

General properties	
Speed gliding[1] / acceleration gliding[1]	upon request
Speed FL_G/acceleration FL_G	≤ 10m/s / ≤ 100m/s²
Speed FL_B/acceleration FL_B	≤ 3m/s / ≤ 6m/s²
igumid® G LW material - permitted temperature °C	-40°C/+120°C
Flammability class, igumid® G LW	VDE 0304 IIC UL94-HB

1) If a gliding application is required for a long travel, please consult igus®.

Installation types, maximum travel lengths

Series	Unsupported	Vertical hanging	Vertical standing	Side mounted, unsupported
R2.26	≤ 4.0m	≤ 30m	≤ 2.0m	≤ 0.7m
R2.40	≤ 5.5m	≤ 40m	≤ 3.0m	≤ 1.0m
R2.48	≤ 5.5m	≤ 50m	≤ 3.0m	≤ 1.0m
R2.75	≤ 6.0m	≤ 50m	≤ 5.0m	≤ 2.0m

1) For openable series along the inner radius in gliding applications, please consult igus®

Product range

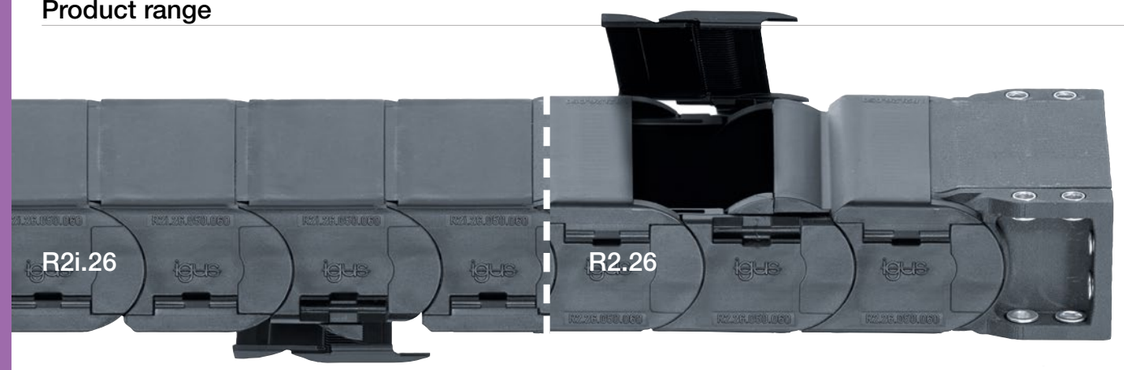

Part No. Openable along the inner radius	Part No. Openable along the outer radius	Inner width *Bi* [mm]	Outer width *Ba* [mm]	Weight [kg/m]
R2I.26.025.□.0	R2.26.025.□.0*	25	41	≈ 0.870
R2I.26.038.□.0	R2.26.038.□.0	38	54	≈ 0.957
R2I.26.050.□.0	R2.26.050.□.0	50	66	≈ 1.044
R2I.26.075.□.0	R2.26.075.□.0	75	91	≈ 1.218
R2I.26.100.□.0	R2.26.100.□.0	100	116	≈ 1.392
R2I.26.130.□.0	R2.26.130.□.0	130	146	≈ 1.600

Available bend radii *R* [mm] | 060 | 075 | 100 | 125 | 150 | 175 | 200 | 250 |

*Width available upon request, please consult igus® for delivery time.

Order key

R2.26.050.075.0

Series / Type	Inner height	Width index	Bend radius	Colour index

Example:
Complete Part No. with the required radius □*R*. Example:
R2I.26.050.075.0 = lids openable along the inner radius, from both sides
R2.26.050.075.0 = lids openable along the outer radius, from both sides
Order index for colour options ▶ **www.igus.eu/info-colours**

Available from stock
Upon request

Unsupported applications | Short travels

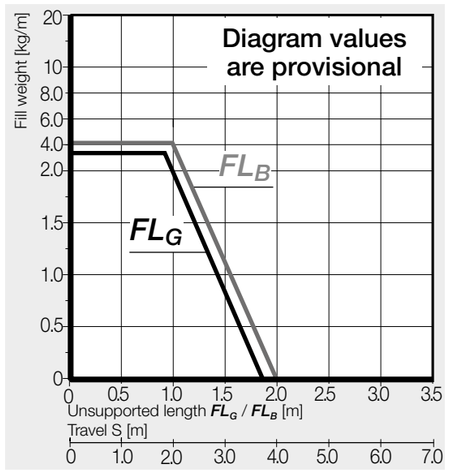

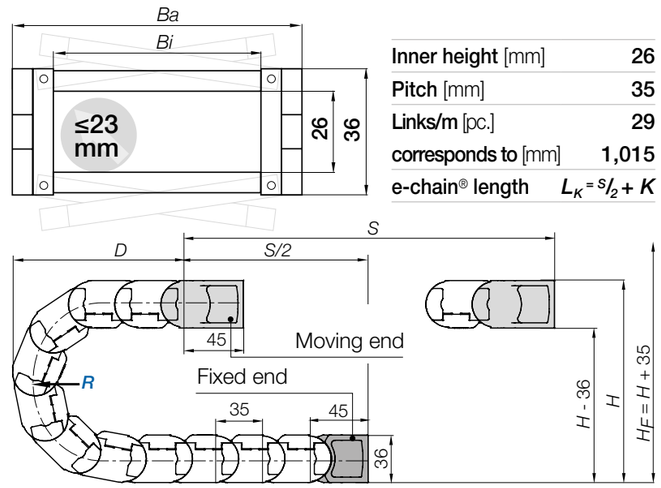

Inner height [mm]	26
Pitch [mm]	35
Links/m [pc.]	29
corresponds to [mm]	1,015
e-chain® length	$L_K = S/2 + K$

R	060	075	100	125	150	175	200	250
H	156	186	236	286	336	386	436	536
D	130.5	145.5	170.5	195.5	220.5	245.5	270	320.5
K	260	310	385	465	545	620	700	860

The required clearance height: $H_F = H + 35mm$ (with 1.5kg/m fill weight)

Note: If a gliding application is required for a long travel, please consult igus®.

Available from stock
Upon request

KMA mounting brackets | Attachment from any side | Pivoting | Locking

Fixed end		Moving end	Front view of KMA
R2.260 ... 6	one end pivoting	R2.260 ... 5	
R2.260 ... 2	both ends locking	R2.260 ... 1	

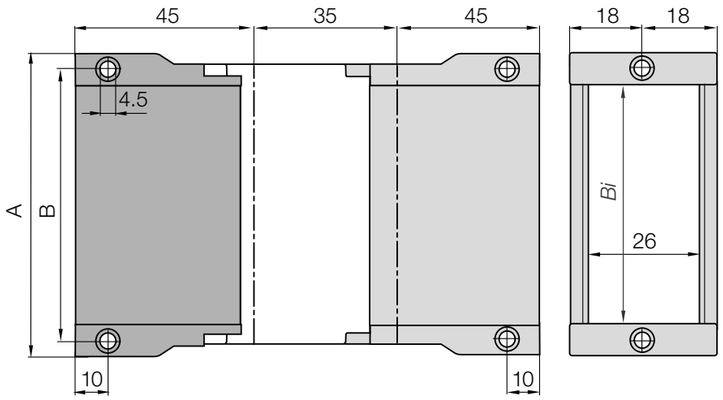



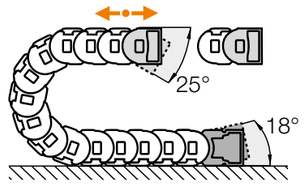

Moving end (outer link)
Fixed end (inner link)

Width index	Part No. Full set KMA one end pivoting	Part No. Full set KMA both ends locking	A [mm]	B [mm]	*Bi* [mm]
025.	**R2.260.025.56**	**R2.260.025.12**	43	34.5	25
038.	**R2.260.038.56**	**R2.260.038.12**	56	47.5	38
050.	**R2.260.050.56**	**R2.260.050.12**	68	59.5	50
075.	**R2.260.075.56**	**R2.260.075.12**	93	84.5	75
100.	**R2.260.100.56**	**R2.260.100.12**	118	109.5	100
130.	**R2.260.130.56**	**R2.260.130.12**	148	139.5	130

(KMA = polymer metal mounting bracket)

Order key

R2.260.050.56.A

Series | Width index | Full set | Pre-fitted

Note: The bracket orientations are set automatically when using an igus® KMA mounting bracket with attachment from any side. To receive a KMA mounting bracket pre-fitted please add index **.A**.

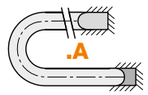

Available from stock
Upon request

Interior separation | Increase cable service life

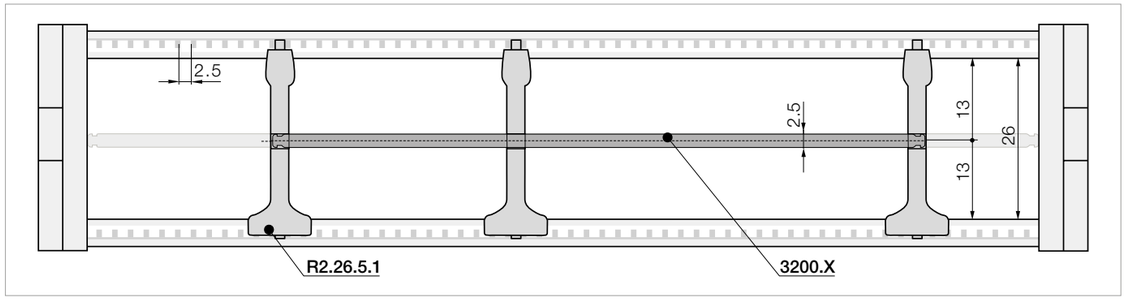

No lateral gap to side links necessary.
As standard separators are fitted every 2nd e-chain® link!

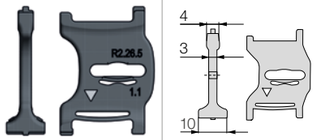

Part No. Notch separator	
unassembled	**R2.26.5**
assembled	**R2.26.5.1**

Locks securely in preset increments

Notch separator for exact positioning.
Recommended for side-mounted applications.

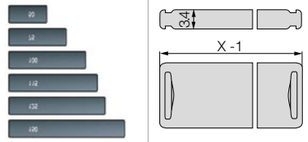

Part No. Shelf	
unassembled	**3200.X**
assembled	**3210.X**

Horizontal separation

Full-width shelf locks securely into separators at both ends, giving a fixed width. Can be used as full-width or modular shelving.

Width [mm]	Part No. unassembled	Part No. assembled	Width [mm]	Part No. unassembled	Part No. assembled	Width [mm]	Part No. unassembled	Part No. assembled	Width [mm]	Part No. unassembled	Part No. assembled
050	**3200.050**	**3210.050**	115	**3200.115**	**3210.115**	175	**3200.175**	**3210.175**	250	**3200.250**	**3210.250**
075	**3200.075**	**3210.075**	125	**3200.125**	**3210.125**	200	**3200.200**	**3210.200**			
100	**3200.100**	**3210.100**	150	**3200.150**	**3210.150**	225	**3200.225**	**3210.225**			

Available from stock
Upon request

Product range



Part No. Openable along the inner radius	Part No. Openable along the outer radius	Inner width *Bi* [mm]	Outer width *Ba* [mm]	Weight [kg/m]
R2I.40.050.□□□.0	R2.40.050.□□□.0	50	66.2	≈ 1.25
R2I.40.075.□□□.0	R2.40.075.□□□.0	75	91.2	≈ 1.50
R2I.40.100.□□□.0	R2.40.100.□□□.0	100	116.2	≈ 1.75
R2I.40.125.□□□.0	R2.40.125.□□□.0	125	141.2	≈ 2.00
R2I.40.150.□□□.0	R2.40.150.□□□.0	150	166.2	≈ 2.25
R2I.40.175.□□□.0	R2.40.175.□□□.0	175	191.2	≈ 2.50
R2I.40.200.□□□.0*	R2.40.20 .□□□.0*	200	216.2	≈ 2.75

Available bend radii *R* [mm] | 080 | 100 | 125 | 150 | 175 | 200 | 250 |

*Width available upon request, please consult igus® for delivery time.

Order key

R2.40.075.100.0

Series / Type	Inner height	Width index	Bend radius	Colour index

Example:
Complete Part No. with the required radius □R□. Example:
R2I.40.075.100.0 = lids openable along the inner radius, from both sides
R2.40.075.100.0 = lids openable along the outer radius, from both sides
Order index for colour options ▶ **www.igus.eu/info-colours**

Available from stock
Upon request

R2.1 | Series R2i.40 / R2.40

R2i.40
R2.40

Unsupported applications | Short travels

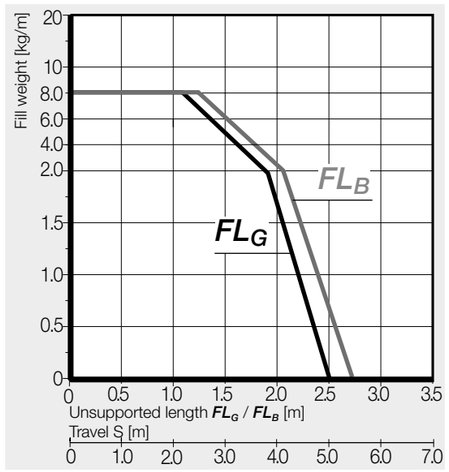

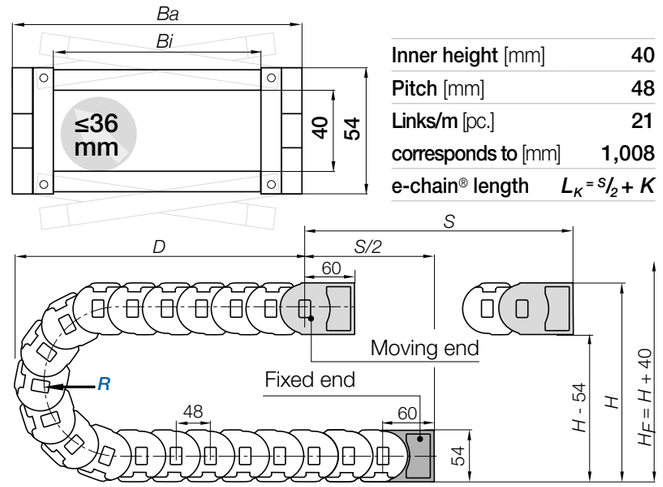

Inner height [mm]	40
Pitch [mm]	48
Links/m [pc.]	21
corresponds to [mm]	1,008
e-chain® length	$L_K = S/2 + K$

R	080	100	125	150	175	200	250
H	214	254	304	354	404	454	554
D	179	199	224	249	274	299	349
K	350	415	490	570	650	725	885

The required clearance height: $H_F = H$ **+ 40mm** (with 2.0kg/m fill weight)

Note: If a gliding application is required for a long travel, please consult igus®.

Available from stock
Upon request

KMA mounting brackets | Attachment from any side | Pivoting | Locking

Fixed end		Moving end	Front view of KMA
R2.400 ... 4	both ends pivoting	R2.400 ... 3	
R2.400 ... 6	one end pivoting	R2.400 ... 5	
R2.400 ... 2	both ends locking	R2.400 ... 1	

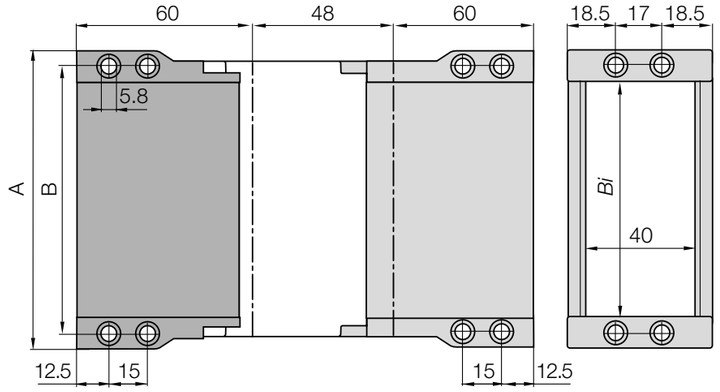



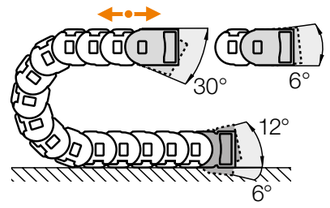

Moving end (outer link)
Fixed end (inner link)

Width index	Part No. Full set KMA both ends pivoting	Part No. Full set KMA one end pivoting	Part No. Full set KMA both ends locking	A [mm]	B [mm]	Bi [mm]
050.	R2.400.050.34	R2.400.050.56	R2.400.050.12	74	62	50
075.	R2.400.075.34	R2.400.075.56	R2.400.075.12	99	87	75
100.	R2.400.100.34	R2.400.100.56	R2.400.100.12	124	112	100
125.	R2.400.125.34	R2.400.125.56	R2.400.125.12	149	137	125
150.	R2.400.150.34	R2.400.150.56	R2.400.150.12	174	162	150
175.	R2.400.175.34	R2.400.175.56	R2.400.175.12	199	187	175
200.	R2.400.200.34*	R2.400.200.56*	R2.400.200.12*	224	212	200

*Width available upon request, please consult igus® for delivery time.
(KMA = polymer metal mounting bracket)

Order key

R2.400.075.34.A

Series	Width index	Full set	Pre-fitted

Note: The bracket orientations are set automatically when using an igus® KMA mounting bracket with attachment from any side. To receive a KMA mounting bracket pre-fitted please add index **.A**.

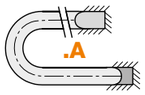

Available from stock
Upon request

R2.1 | Series R2i.40 / R2.40

R2i.40
R2.40

Interior separation | Increase cable service life

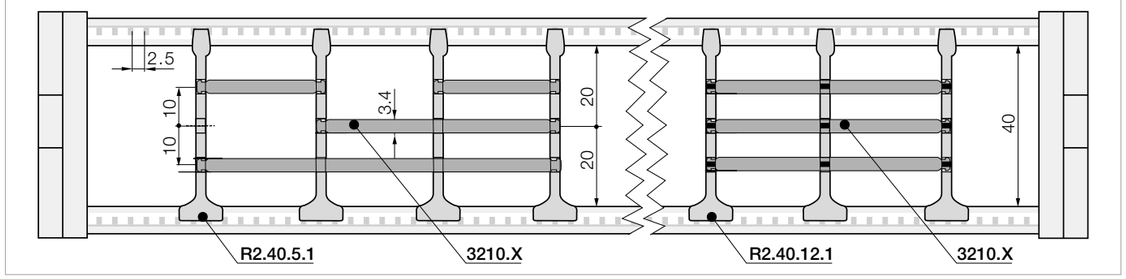

No lateral gap to side links necessary.
As standard separators are fitted every 2nd e-chain® link!



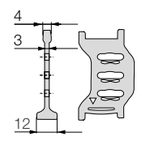

Part No. Notch separator
unassembled **R2.40.5**
assembled **R2.40.5.1**

Locks securely in preset increments

Notch separator for exact positioning.
Recommended for side-mounted applications.



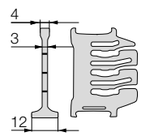

Part No. Lean separator
unassembled **R2.40.12**
assembled **R2.40.12.1**

Lean separators[1)]

Quick fitting of shelves in several layers. Enables extremely fast replacement of individual cables in very full e-chains®.



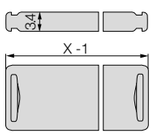

Part No. Shelf
unassembled **3200.X**
assembled **3210.X**

Horizontal separation

Full-width shelf locks securely into separators at both ends, giving a fixed width. Can be used as full-width or modular shelving.

Width [mm]	Part No. unassembled	Part No. assembled	Width [mm]	Part No. unassembled	Part No. assembled	Width [mm]	Part No. unassembled	Part No. assembled	Width [mm]	Part No. unassembled	Part No. assembled
050	**3200.050**	**3210.050**	115	**3200.115**	**3210.115**	175	**3200.175**	**3210.175**	250	**3200.250**	**3210.250**
075	**3200.075**	**3210.075**	125	**3200.125**	**3210.125**	200	**3200.200**	**3210.200**			
100	**3200.100**	**3210.100**	150	**3200.150**	**3210.150**	225	**3200.225**	**3210.225**			

Interior separation | To allow faster filling



Lean separator for even faster filling: quickly insert several layers of cables into the e-chain® and reduce the installation time by up to 50%. Measured on a 4m long e-chain® fitted with 12 cables. **1) Note: Please combine a maximum of four lean separators with one shelf. Not suitable for side-mounted e-chains®!**

Available from stock
Upon request

Product range

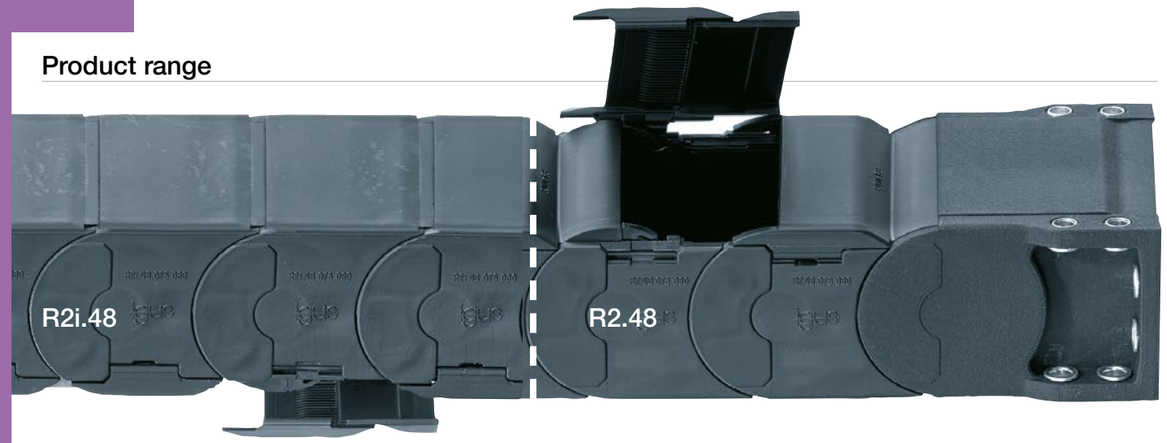

Part No. Openable along the inner radius	Part No. Openable along the outer radius	Inner width *Bi* [mm]	Outer width *Ba* [mm]	Weight [kg/m]
R2I.48.050.□□.0*	R2.48.050.□□.0*	50	70	≈ 1,92
R2I.48.075.□□.0*	**R2.48.075.□□.0**	75	95	≈ 2,23
R2I.48.100.□□.0	**R2.48.100.□□.0**	100	120	≈ 2,55
R2I.48.115.□□.0	**R2.48.115.□□.0**	115	135	≈ 2,74
R2I.48.125.□□.0	R2.48.125.□□.0*	125	145	≈ 2,86
R2I.48.150.□□.0*	R2.48.150.□□.0*	150	170	≈ 3,18
R2I.48.175.□□.0*	R2.48.175.□□.0*	175	195	≈ 3,49
R2I.48.200.□□.0	R2.48.200.□□.0*	200	220	≈ 3,81
R2I.48.225.□□.0*	R2.48.225.□□.0*	225	245	≈ 4,05
R2I.48.250.□□.0	**R2.48.250.□□.0**	250	270	≈ 4,44

Available bend radii *R* [mm] | 100 | 125 | 150 | 175 | 200 | 225 | 250 | 300 |

*Width available upon request, please consult igus® for delivery time.

Order key

R2.48.100.100.0

Series / Type | Inner height | Width index | Bend radius | Colour index

Example:
Complete Part No. with the required radius □*R*□. Example:
R2I.48.100.100.0 = lids openable along the inner radius, from both sides
R2.48.100.100.0 = lids openable along the outer radius, from both sides
Order index for colour options ▶ **www.igus.eu/info-colours**

Available from stock
Upon request

Unsupported applications | Short travels

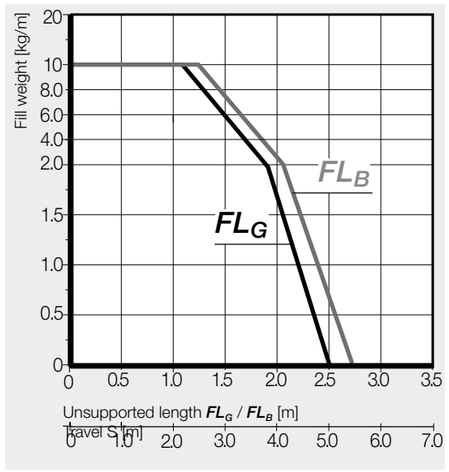

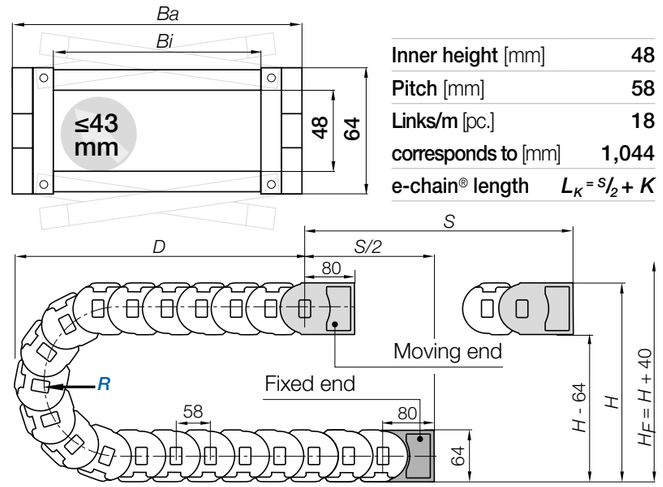

Inner height [mm]	48
Pitch [mm]	58
Links/m [pc.]	18
corresponds to [mm]	1,044
e-chain® length	$L_K = S/2 + K$

R	100	125	150	175	200	225	250	300
H	264	314	364	414	464	514	564	664
D	219	244	269	294	319	344	369	419
K	435	510	590	670	745	825	905	1,060

The required clearance height: $H_F = H$ **+ 40mm** (with 2.0kg/m fill weight)

Note: If a gliding application is required for a long travel, please consult igus®.

Available from stock
Upon request

KMA mounting brackets | Attachment from any side | Pivoting | Locking

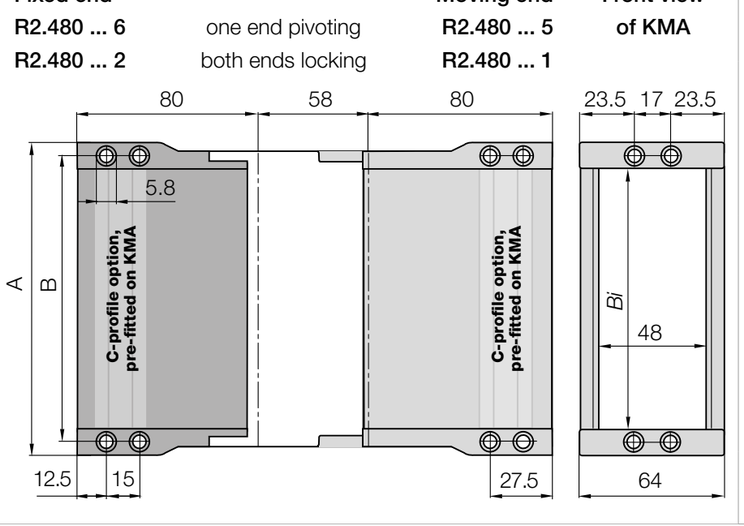

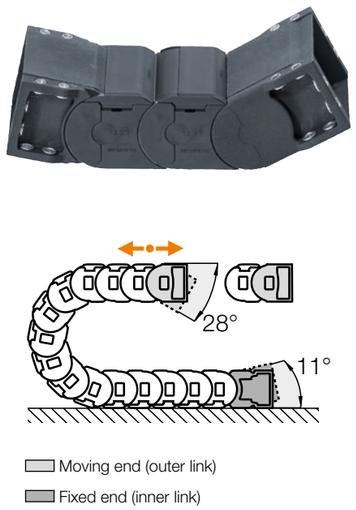

Width index	Part No. Full set KMA one end pivoting With C-profile	Without C-profile	Part No. Full set KMA both ends locking With C-profile	Without C-profile	A [mm]	B [mm]	*Bi* [mm]
050.	R2.480.050.56.☐*	R2.480.050.56*	R2.480.050.12.☐*	R2.480.050.12*	74	62	50
075.	**R2.480.075.56.☐**	**R2.480.075.56**	**R2.480.075.12.☐**	**R2.480.075.12**	99	87	75
100.	**R2.480.100.56.☐**	**R2.480.100.56**	**R2.480.100.12.☐**	**R2.480.100.12**	124	112	100
115.	**R2.480.115.56.☐**	**R2.480.115.56**	**R2.480.115.12.☐**	**R2.480.115.12**	139	127	115
125.	**R2.480.125.56.☐**	**R2.480.125.56**	**R2.480.125.12.☐**	**R2.480.125.12**	149	137	125
150.	R2.480.150.56.☐*	R2.480.150.56*	R2.480.150.12.☐*	R2.480.150.12*	174	162	150
175.	R2.480.175.56.☐*	R2.480.175.56*	R2.480.175.12.☐*	R2.480.175.12*	199	187	175
200.	**R2.480.200.56.☐**	**R2.480.200.56**	**R2.480.200.12.☐**	**R2.480.200.12**	224	212	200
225.	R2.480.225.56.☐*	R2.480.225.56*	R2.480.225.12.☐*	R2.480.225.12*	249	237	225
250.	**R2.480.250.56.☐**	**R2.480.250.56**	**R2.480.250.12.☐**	**R2.480.250.12**	274	262	250

*Width available upon request, please consult igus® for delivery time.

For the C-profile option please add index **.C**. (KMA = polymer metal mounting bracket)

Order key

R2.480.100.56.C.A2

Series | Width index | Full set | C-profile option | Pre-fitted

Note: Possible orientations for KMA mounting brackets. For mounting brackets pre-fitted **without C-profile**, please add index **.A**. For types pre-fitted **with C-profile** please add index **.A1**, **.A2**, **.A3** or **.A4**.



Available from stock

Upon request

Interior separation | Increase cable service life

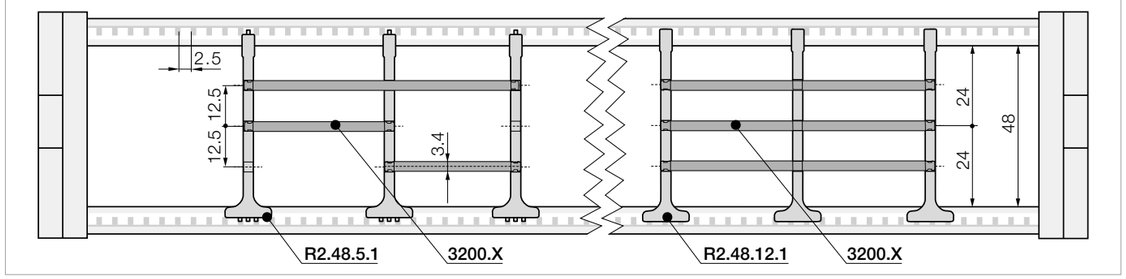

No lateral gap to side links necessary.

As standard separators are fitted every 2nd e-chain® link!



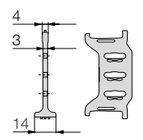

Part No. Notch separator	
unassembled	**R2.48.5**
assembled	**R2.48.5.1**

Locks securely in preset increments

Notch separator for exact positioning.
Recommended for side-mounted applications.



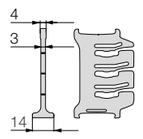

Part No. Lean separator	
unassembled	**R2.48.12**
assembled	**R2.48.12.1**

Lean separators[1)]

Quick fitting of shelves in several layers. Enables extremely fast replacement of individual cables in very full e-chains®.



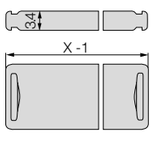

Part No. Shelf	
unassembled	**3200.X**
assembled	**3210.X**

Horizontal separation

Full-width shelf locks securely into separators at both ends, giving a fixed width. Can be used as full-width or modular shelving.

Width [mm]	Part No. unassembled	Part No. assembled
050	**3200.050**	**3210.050**
075	**3200.075**	**3210.075**
100	**3200.100**	**3210.100**
115	**3200.115**	**3210.115**
125	**3200.125**	**3210.125**
150	**3200.150**	**3210.150**
175	**3200.175**	**3210.175**
200	**3200.200**	**3210.200**
225	**3200.225**	**3210.225**
250	**3200.250**	**3210.250**

Interior separation | To allow faster filling



Lean separator for even faster filling: quickly insert several layers of cables into the e-chain® and reduce the installation time by up to 50%. Measured on a 4m long e-chain® fitted with 12 cables. **1) Note: Please combine a maximum of four lean separators with one shelf. Not suitable for side-mounted e-chains®!**

Available from stock

Upon request

Product range



Part No. Openable along the outer radius	Inner width *Bi* [mm]	Outer width *Ba* [mm]	Weight [kg/m]
R2.75.111.□.0	111	135	≈ 3.175
R2.75.163.□.0	163	187	≈ 3.672
R2.75.200.□.0	200	224	≈ 4.012
Available bend radii *R* [mm] | 130 | 150 | 200 | 250 |			

Order key

R2.75.200.200.0

Series / Type	Inner height	Width index	Bend radius	Colour index

Example:
Complete Part No. with the required radius □. Example:
R2.75.200.200.0 = lids openable along the outer radius, from both sides
Order index for colour options ▶ **www.igus.eu/info-colours**

Available from stock
Upon request

Unsupported applications | Short travels

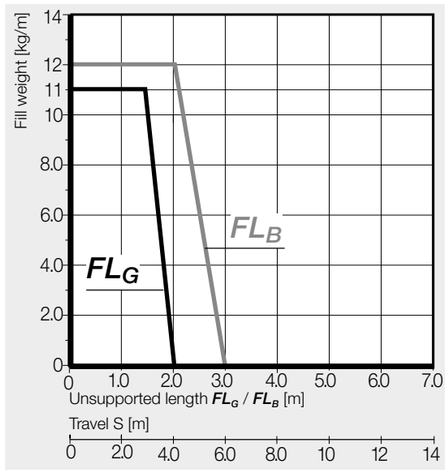

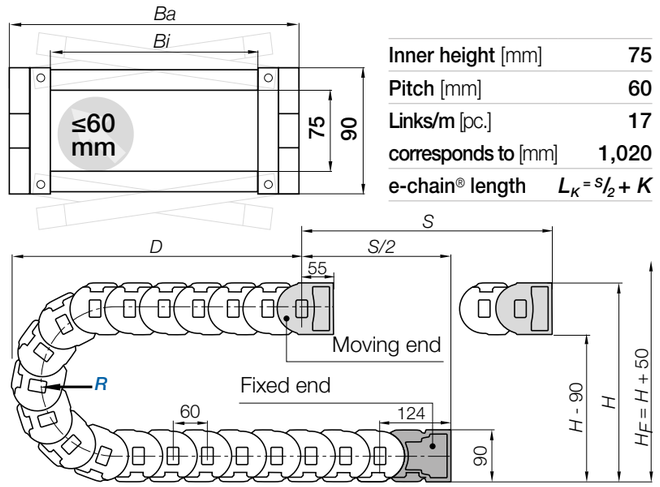

Inner height [mm]	75
Pitch [mm]	60
Links/m [pc.]	17
corresponds to [mm]	1,020
e-chain® length	$L_K = S/2 + K$

R	130	150	200	250
H	350	390	490	590
D	265	285	335	385
K	530	595	750	910

The required clearance height: $H_F = H + 50$mm (with 3.0kg/m fill weight)

Note: If a gliding application is required for a long travel, please consult igus®.

Available from stock
Upon request

KMA mounting brackets | Attachment from any side | Pivoting

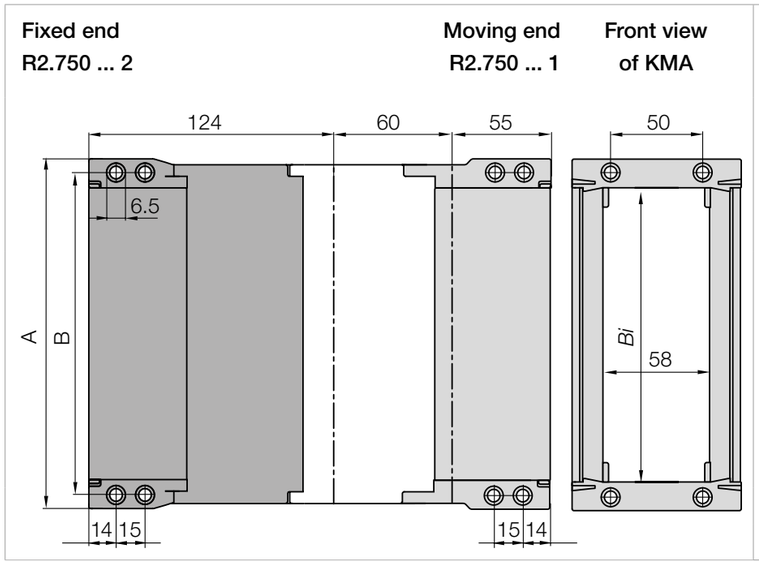

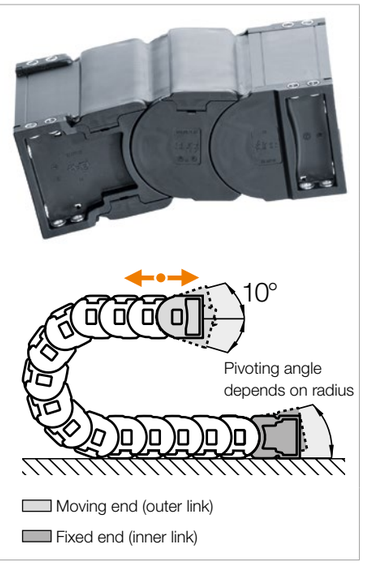

Width index	Part No. Full set KMA both ends pivoting	A [mm]	B [mm]	*Bi* [mm]
111.	**R2.750.111.12**	141	127	111
163.	**R2.750.163.12**	193	179	163
200.	**R2.750.200.12**	230	216	200

(KMA = polymer metal mounting bracket)

Order key

R2.750.111.12.A

Series	Width index	Full set	Pre-fitted

Note: The bracket orientations are set automatically when using an igus® KMA mounting bracket with attachment from any side. To receive a KMA mounting bracket pre-fitted please add index **.A**.

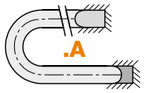

Available from stock
Upon request

Interior separation | Increase cable service life

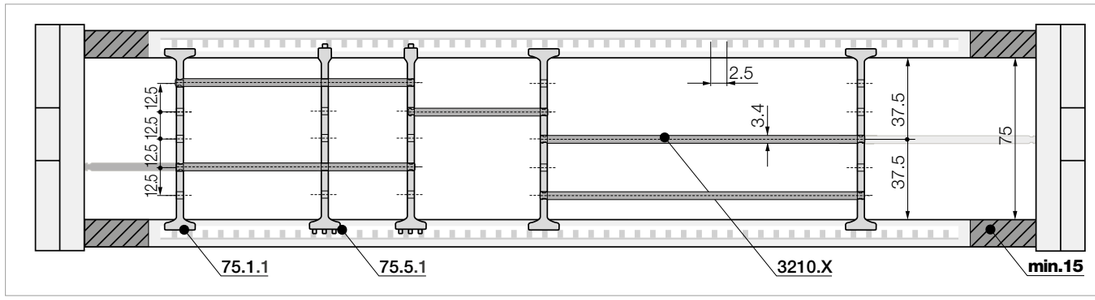

Note: Please be aware of the minimum lateral gap to the side links! **e-tubes: 15mm**
As standard separators are fitted every 2nd e-chain® link!



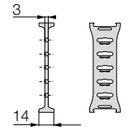

Part No. Standard separator	
unassembled	**75.1**
assembled	**75.1.1**

For all applications

Standard separator with a wide base for maximum holding force.



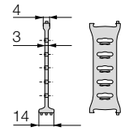

Part No. Notch separator	
unassembled	**75.5**
assembled	**75.5.1**

Locks securely in preset increments

Notch separator for exact positioning.
Recommended for side-mounted applications.

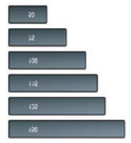

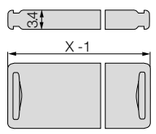

Part No. Shelf	
unassembled	**3200.X**
assembled	**3210.X**

Horizontal separation

Full-width shelf locks securely into separators at both ends, giving a fixed width. Can be used as full-width or modular shelving.

Width [mm]	Part No. unassembled	Part No. assembled
050	**3200.050**	**3210.050**
075	**3200.075**	**3210.075**
100	**3200.100**	**3210.100**
115	**3200.115**	**3210.115**
125	**3200.125**	**3210.125**
150	**3200.150**	**3210.150**
175	**3200.175**	**3210.175**
200	**3200.200**	**3210.200**
225	**3200.225**	**3210.225**
250	**3200.250**	**3210.250**

Available from stock
Upon request



Attachment from any side with KMA mounting brackets

40% faster filling[1]: crossbar designed for tool-free opening and closing

15% higher pull-out strength of the crossbars[1]: strong connection to the e-chain®

Stronger[1]: optimum force distribution (four stop-dogs)

17dB(A) quieter[2]: optional noise accessories available

10% less weight[1]: material recesses for optimised weight and strength

1) Compared to E4.1

2) Compared to 4040C

The next generation of easy-to-assemble e-chains® - E4Q

Easy opening and closing, without tools.
The latest E4Q e-chains® generation combines proven design features of the 12-year old, robust E4.1 e-chains® standard with new bionic design elements and a novel opening mechanism. This gives the E4Q an even longer service life and significantly improved ease of installation.

Benefits

- Tool-free opening and closing
- Sustainability - 10% less material means 10% less energy consumption during production
- Short cross-bar pickup for even easier filling of the e-chain®
- Optimised interior geometry for longer cable service life
- Integrated grid structure on crossbars for fixed interior separation with narrower separators
- Inner/outer link principle for straight run
- Undercut design ensures the best hold as well as high lateral and torsion strength

Typical application areas

- Machine tools
- Crane systems
- Automation systems

Selection table

Part No.	Inner height *hi* [mm]	Outer height *ha* [mm]	Inner width *Bi* [mm]	Outer width *Ba* [mm]	Bend radius *R* [mm]	Unsupported length ≤ [m]	Page
E4Q - e-chains® with crossbars every link							
The all-rounder, for heavy-duty applications.							
E4Q.34	34	54	75 - 400	98 - 423	063 - 300	3.60	**178**
E4Q.44	44	64	75 - 400	101 - 426	075 - 350	4.00	**184**
E4Q.58	58	84	100 - 500	134 - 534	135 - 500	5.00	**190**
E4Q.82	82	108	100 - 500	150 - 550	150 - 1.000	6.20	**196**
H4Q - e-chains® with crossbars every 2nd link							
The cost-effective, easy-to-install alternative for almost any application.							
H4Q.34	34	54	75 - 400	98 - 423	063 - 300	3.60	**178**
H4Q.44	44	64	75 - 400	101 - 426	075 - 350	4.00	**184**
H4Q.58	58	84	100 - 500	134 - 534	135 - 500	5.00	**190**
H4Q.82	82	108	100 - 500	150 - 550	150 - 1.000	6.20	**196**

Technical data

General properties	
Speed gliding / acceleration gliding	≤ 10m/s / ≤ 50m/s²
Speed FL_G/acceleration FL_G	≤ 20m/s / ≤ 200m/s²
Speed FL_B/acceleration FL_B	≤ 3m/s / ≤ 6m/s²
igumid® G LW material - permitted temperature °C	-40°C/+120°C
Flammability class, igumid® G LW	VDE 0304 IIC UL94-HB

Installation types, maximum travel lengths

Series	Unsupported	Gliding	Vertical hanging	Vertical standing	Side mounted, unsupported
E4Q.34 / H4Q.34	≤ 7.2m	≤ 200m	≤ 80m	≤ 5.0m	≤ 1.5m
E4Q.44 / H4Q.44	≤ 8.0m	≤ 300m	≤ 100m	≤ 6.0m	≤ 2.0m
E4Q.58 / H4Q.58	≤ 10.0m	≤ 400m	≤ 100m	≤ 6.0m	≤ 2.5m
E4Q.82 / H4Q.82	≤ 12.4m	≤ 400m	≤ 120m	≤ 6.0m	≤ 3.0m

Product range

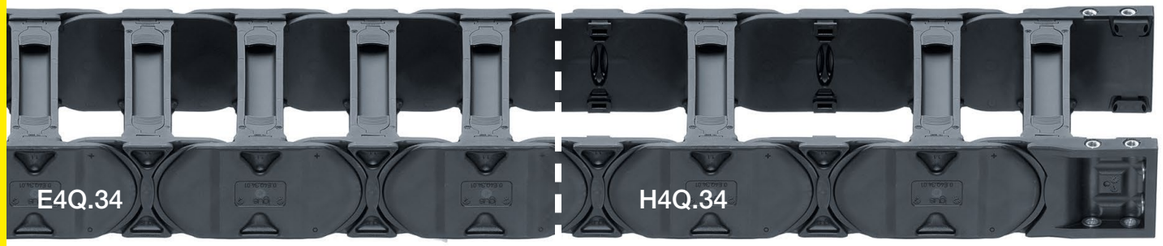

Part No. e-chains® with crossbars every link	Part No. e-chains® with crossbars every 2nd link	*Bi* [mm]	*Ba* [mm]	E4Q.34 [kg/m]	H4Q.34 [kg/m]
E4Q.34.075.□.0	H4Q.34.075.□.0	75	98	≈ 1.61	≈ 1.43
E4Q.34.087.□.0	H4Q.34.087.□.0	87	111	≈ 1.65	≈ 1.45
E4Q.34.100.□.0	H4Q.34.100.□.0	100	123	≈ 1.70	≈ 1.47
E4Q.34.108.□.0	H4Q.34.108.□.0	108	131	≈ 1.73	≈ 1.49
E4Q.34.112.□.0	H4Q.34.112.□.0	112	136	≈ 1.74	≈ 1.49
E4Q.34.125.□.0	H4Q.34.125.□.0	125	148	≈ 1.79	≈ 1.52
E4Q.34.137.□.0	H4Q.34.137.□.0	137	161	≈ 1.83	≈ 1.54
E4Q.34.150.□.0	H4Q.34.150.□.0	150	173	≈ 1.96	≈ 1.60
E4Q.34.162.□.0	H4Q.34.162.□.0	162	186	≈ 2.00	≈ 1.63
E4Q.34.168.□.0	H4Q.34.168.□.0	168	191	≈ 2.03	≈ 1.64
E4Q.34.175.□.0	H4Q.34.175.□.0	175	198	≈ 2.06	≈ 1.65
E4Q.34.187.□.0	H4Q.34.187.□.0	187	211	≈ 2.10	≈ 1.67
E4Q.34.200.□.0	H4Q.34.200.□.0	200	223	≈ 2.15	≈ 1.70
E4Q.34.212.□.0	H4Q.34.212.□.0	212	236	≈ 2.19	≈ 1.72
E4Q.34.225.□.0	H4Q.34.225.□.0	225	248	≈ 2.24	≈ 1.74
E4Q.34.237.□.0	H4Q.34.237.□.0	237	261	≈ 2.28	≈ 1.76
E4Q.34.250.□.0	H4Q.34.250.□.0	250	273	≈ 2.32	≈ 1.78
E4Q.34.262.□.0	H4Q.34.262.□.0	262	286	≈ 2.36	≈ 1.81
E4Q.34.275.□.0	H4Q.34.275.□.0	275	298	≈ 2.41	≈ 1.83
E4Q.34.287.□.0	H4Q.34.287.□.0	287	311	≈ 2.46	≈ 1.85
E4Q.34.300.□.0	H4Q.34.300.□.0	300	323	≈ 2.51	≈ 1.88
E4Q.34.312.□.0*	H4Q.34.312.□.0*	312	336	≈ 2.55	≈ 1.90
E4Q.34.325.□.0*	H4Q.34.325.□.0*	325	348	≈ 2.60	≈ 1.92
E4Q.34.337.□.0*	H4Q.34.337.□.0*	337	361	≈ 2.64	≈ 1.94
E4Q.34.350.□.0	H4Q.34.350.□.0	350	373	≈ 2.69	≈ 1.97
E4Q.34.362.□.0*	H4Q.34.362.□.0*	362	386	≈ 2.73	≈ 1.99
E4Q.34.375.□.0	H4Q.34.375.□.0	375	398	≈ 2.78	≈ 2.01
E4Q.34.387.□.0	H4Q.34.387.□.0	387	411	≈ 2.82	≈ 2.03
E4Q.34.400.□.0	H4Q.34.400.□.0	400	423	≈ 2.90	≈ 2.08

Available bend radii *R* [mm] | 063 | 075 | 100 | 125 | 150 | 175 | 200 | 220 | 250 | 300 |

*Width available upon request, please consult igus® for delivery time.

Order key

E4Q.34.150.150.0

Series / Type	Inner height	Width index	Bend radius	Colour index

Order example:
Complete Part No. with the required radius □ *R*. Example:
E4Q.34.150.150.0 = crossbars removable along the inner and outer radius
H4Q.34.150.150.0 = crossbars removable along the inner and outer radius
Order index for colour options ▶ **www.igus.eu/info-colours**

Available from stock
Upon request

Unsupported applications | Short travels

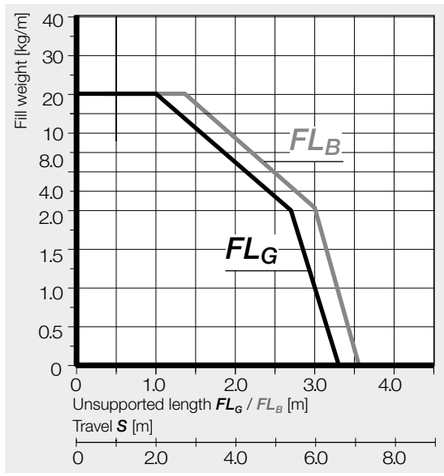

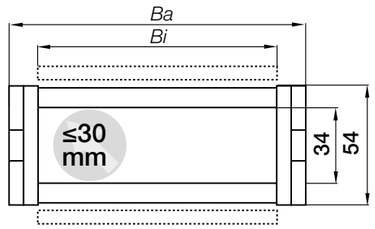

Inner height [mm]	34
Pitch [mm]	56
Links/m [pc.]	18
corresponds to [mm]	1,008
e-chain® length	$L_K = S/2 + K$

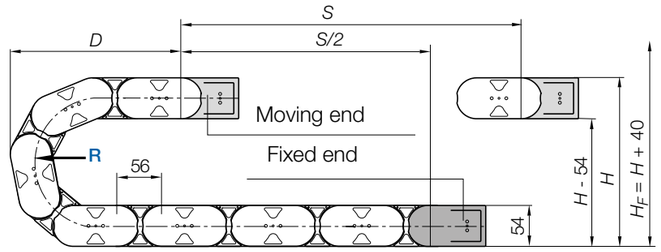

R	063	075	100	125	150	175	200	220	250	300
H^{+20}_{0}	180	204	254	304	354	404	454	494	554	654
D	174	186	211	236	261	286	311	331	361	411
K	310	350	430	505	585	665	745	805	900	1,055

The required clearance height: $H_F = H + 40$mm (with 2.0kg/m fill weight)

Gliding applications | For travel lengths from 10m to max. 200m

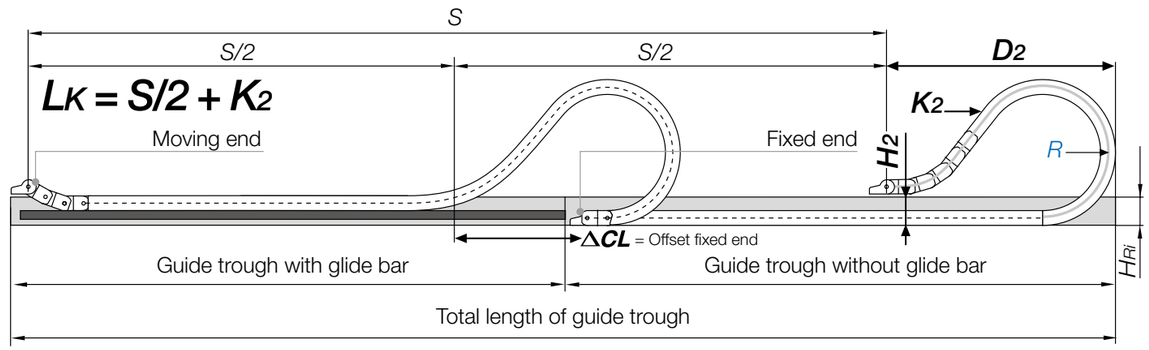

R	063	075	100	125	150	175	200	220	250	300
H_2	126	150	166	166	166	166	166	166	166	166
D_2^{+25}	146	158	370	470	500	655	770	900	930	1,100
K_2	310	350	616	784	896	1,120	1,288	1,456	1,568	1,904
ΔCL	–	–	160	210	240	370	460	540	570	690

Note: In case of travels between 7 and 10m we recommend an e-chain® with a longer unsupported length.

Available from stock
Upon request

KMA mounting brackets | Attachment from any side | Pivoting | Locking

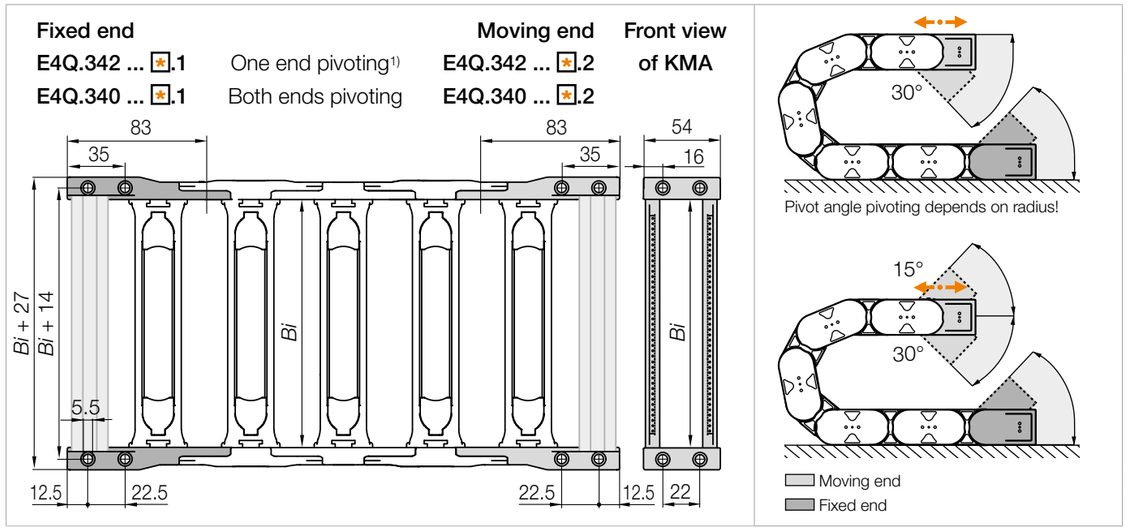

Width index	KMA full set		
	Part No. one end pivoting1)	Part No. both ends pivoting	*Bi* [mm]
075.	E4Q.342.075.✱.12.☐	E4Q.340.075.✱.12.☐	75
087.	E4Q.342.087.✱.12.☐	E4Q.340.087.✱.12.☐	87
100.	E4Q.342.100.✱.12.☐	E4Q.340.100.✱.12.☐	100
108.	E4Q.342.108.✱.12.☐	E4Q.340.108.✱.12.☐	108
112.	E4Q.342.112.✱.12.☐	E4Q.340.112.✱.12.☐	112
125.	E4Q.342.125.✱.12.☐	E4Q.340.125.✱.12.☐	125
137.	E4Q.342.137.✱.12.☐	E4Q.340.137.✱.12.☐	137
150.	E4Q.342.150.✱.12.☐	E4Q.340.150.✱.12.☐	150
162.	E4Q.342.162.✱.12.☐	E4Q.340.162.✱.12.☐	162
168.	E4Q.342.168.✱.12.☐	E4Q.340.168.✱.12.☐	168
175.	E4Q.342.175.✱.12.☐	E4Q.340.175.✱.12.☐	175
187.	E4Q.342.187.✱.12.☐	E4Q.340.187.✱.12.☐	187
200.	E4Q.342.200.✱.12.☐	E4Q.340.200.✱.12.☐	200
212.	E4Q.342.212.✱.12.☐	E4Q.340.212.✱.12.☐	212
225.	E4Q.342.225.✱.12.☐	E4Q.340.225.✱.12.☐	225

Width index	KMA full set		
	Part No. one end pivoting1)	Part No. both ends pivoting	*Bi* [mm]
237.	E4Q.342.237.✱.12.☐	E4Q.340.237.✱.12.☐	237
250.	E4Q.342.250.✱.12.☐	E4Q.340.250.✱.12.☐	250
262.	E4Q.342.262.✱.12.☐	E4Q.340.262.✱.12.☐	262
275.	E4Q.342.275.✱.12.☐	E4Q.340.275.✱.12.☐	275
287.	E4Q.342.287.✱.12.☐	E4Q.340.287.✱.12.☐	287
300.	E4Q.342.300.✱.12.☐	E4Q.340.300.✱.12.☐	300
312.	E4Q.342.312.✱.12.☐*	E4Q.340.312.✱.12.☐*	312
325.	E4Q.342.325.✱.12.☐*	E4Q.340.325.✱.12.☐*	325
337.	E4Q.342.337.✱.12.☐*	E4Q.340.337.✱.12.☐*	337
350.	E4Q.342.350.✱.12.☐	E4Q.340.350.✱.12.☐	350
362.	E4Q.342.362.✱.12.☐*	E4Q.340.362.✱.12.☐*	362
375.	E4Q.342.375.✱.12.☐	E4Q.340.375.✱.12.☐	375
387.	E4Q.342.387.✱.12.☐	E4Q.340.387.✱.12.☐	387
400.	E4Q.342.400.✱.12.☐	E4Q.340.400.✱.12.☐	400

1) One end pivoting - standard for E4Q mounting brackets.

*Width available upon request, please consult igus® for delivery time.

(KMA = polymer metal mounting bracket)

Available from stock
Upon request

E4Q | Series E4Q.34 / H4Q.34

E4Q.34
H4Q.34

KMA mounting brackets | Attachment from any side | Pivoting | Locking

Note ✱: The e-chains® may end with either an inner or an outer side link. An outer side link should always be the first e-chain® link at the moving end. Please specify the index 1 (for odd) or 2 (for even) depending on an even or odd number of links required.

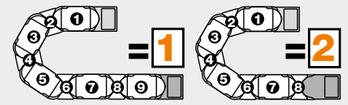

Order key

E4Q.342.150.2.12.C.A2

Series	Width index	Even number of links	Full set	C-profile option	Pre-fitted

Note: Possible orientations for KMA mounting brackets. For mounting brackets pre-fitted **without strain relief**, please add index **.A** . For types pre-fitted **with strain relief** please add index **.A1**, **.A2**, **.A3** or **.A4**.



For the C-profile option please add index **.C**.

Available from stock
Upon request

Interior separation | Increase cable service life

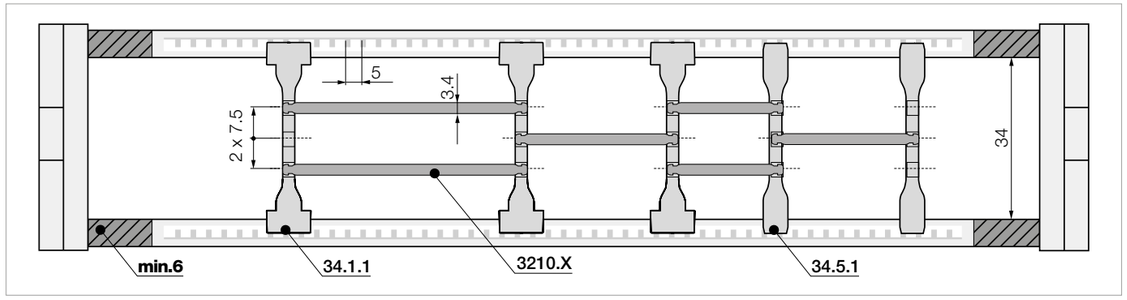

Note: Please be aware of the minimum lateral gap to the side links! **e-chain®: 6mm**
As standard separators are fitted every 2nd e-chain® link!



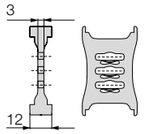

Part No.	
Standard separator	
unassembled	**34.1**
assembled	**34.1.1**

For all applications

Standard separator with a wide base for maximum holding force.



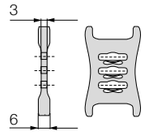

Part No.	
Notch separator	
unassembled	**34,5**
assembled	**34.5.1**

Locks securely in preset increments

Notch separator for exact positioning.
Recommended for side-mounted applications.

Part No.	
Shelf	
unassembled	**3200.X**
assembled	**3210.X**

Horizontal separation

Full-width shelf locks securely into separators at both ends, giving a fixed width. Can be used as full-width or modular shelving.

Width [mm]	Part No. unassembled	Part No. assembled
050	**3200.050**	**3210.050**
075	**3200.075**	**3210.075**
100	**3200.100**	**3210.100**

Width [mm]	Part No. unassembled	Part No. assembled
115	**3200.115**	**3210.115**
125	**3200.125**	**3210.125**
150	**3200.150**	**3210.150**

Width [mm]	Part No. unassembled	Part No. assembled
175	**3200.175**	**3210.175**
200	**3200.200**	**3210.200**
225	**3200.225**	**3210.225**

Width [mm]	Part No. unassembled	Part No. assembled
250	**3200.250**	**3210.250**

Available from stock
Upon request

Universal interior separation | Modular shelving for complete flexibility

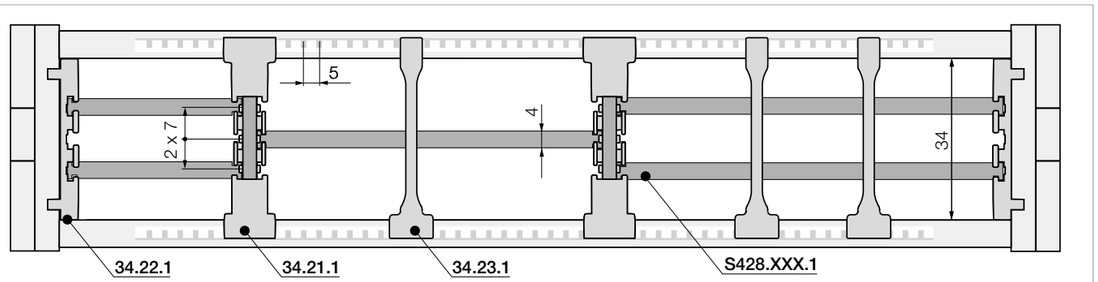

No lateral gap to side links necessary.
As standard separators are fitted every 2nd e-chain® link!



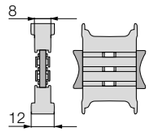

Part No.	
Universal middle plate	
unassembled	**34.21**
assembled	**34.21.1**

Universal middle plates

The shelves can be inserted from both sides. The shelves are locked in place by means of the integrated slider and automatically when the crossbar is fitted.



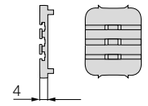

Part No.	
Universal side plate	
unassembled	**34.22**
assembled	**34.22.1**

Universal side plates

Allow modular shelving right up to the side links.
Shelves can be inserted from both sides.



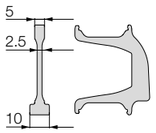

Part No.	
Separator	
unassembled	**34.23**
assembled	**34.23.1**

Separators for universal interior separation

For additional vertical partitioning of the system. When using the separator, the shelves can only be removed in one direction.



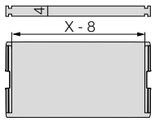

Part No.	
Partial shelf[1)]	
unassembled	**S428.XXX**
assembled	**S428.XXX.1**

Separators[1)] for universal interior separation

Shelves of various widths can be arranged in steps of 7mm

Width [mm]	Part No. unassembled	Part No. assembled
018	**S428.018**	**S428.018.1**
023*	**S428.023**	**S428.023.1**
025	**S428.025**	**S428.025.1**
028*	**S428.028**	**S428.028.1**
033	**S428.033**	**S428.033.1**
044	**S428.044**	**S428.044.1**

Width [mm]	Part No. unassembled	Part No. assembled
050	**S428.050**	**S428.050.1**
058	**S428.058**	**S428.058.1**
062	**S428.062**	**S428.062.1**
068	**S428.068**	**S428.068.1**
070	**S428.070**	**S428.070.1**
075	**S428.075**	**S428.075.1**

Width [mm]	Part No. unassembled	Part No. assembled
083	**S428.083**	**S428.083.1**
087	**S428.087**	**S428.087.1**
100	**S428.100**	**S428.100.1**
108	**S428.108**	**S428.108.1**
125	**S428.125**	**S428.125.1**
150	**S428.150**	**S428.150.1**

Width [mm]	Part No. unassembled	Part No. assembled
175	**S428.175**	**S428.175.1**
200	**S428.200**	**S428.200.1**
208*	**S428.208**	**S428.208.1**

* Available upon request, please consult igus® for delivery time.

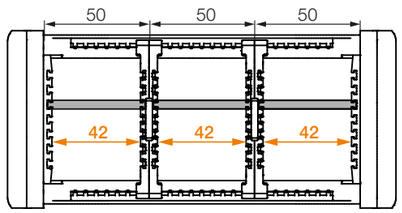

1) Note: The available width of the shelf S428.XXX deviates by 8mm from the width stated in the Part No. With the shelf S428.050, e.g. the space between the separators is 42mm.

Product range

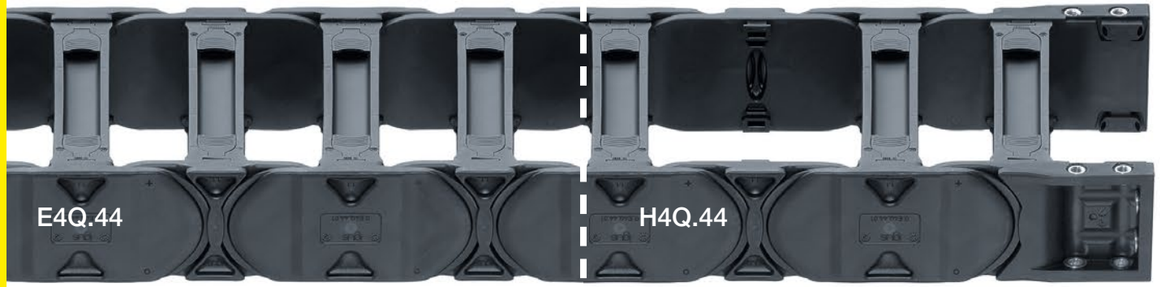

Part No. e-chains® with crossbars every link	Part No. e-chains® with crossbars every 2nd link	*Bi* [mm]	*Ba* [mm]	E4Q.44 [kg/m]	H4Q.44 [kg/m]
E4Q.44.075.□.0	H4Q.44.075.□.0	75	101	≈ 1.61	≈ 1.43
E4Q.44.087.□.0	H4Q.44.087.□.0	87	114	≈ 1.65	≈ 1.45
E4Q.44.100.□.0	H4Q.44.100.□.0	100	126	≈ 1.70	≈ 1.47
E4Q.44.108.□.0	H4Q.44.108.□.0	108	134	≈ 1.73	≈ 1.49
E4Q.44.112.□.0	H4Q.44.112.□.0	112	139	≈ 1.74	≈ 1.49
E4Q.44.125.□.0	H4Q.44.125.□.0	125	151	≈ 1.79	≈ 1.52
E4Q.44.137.□.0	H4Q.44.137.□.0	137	164	≈ 1.83	≈ 1.54
E4Q.44.150.□.0	H4Q.44.150.□.0	150	176	≈ 1.96	≈ 1.60
E4Q.44.162.□.0	H4Q.44.162.□.0	162	189	≈ 2.00	≈ 1.63
E4Q.44.168.□.0	H4Q.44.168.□.0	168	194	≈ 2.03	≈ 1.64
E4Q.44.175.□.0	H4Q.44.175.□.0	175	201	≈ 2.06	≈ 1.65
E4Q.44.187.□.0	H4Q.44.187.□.0	187	214	≈ 2.10	≈ 1.67
E4Q.44.200.□.0	H4Q.44.200.□.0	200	226	≈ 2.15	≈ 1.70
E4Q.44.212.□.0	H4Q.44.212.□.0	212	239	≈ 2.19	≈ 1.72
E4Q.44.225.□.0	H4Q.44.225.□.0	225	251	≈ 2.24	≈ 1.74
E4Q.44.237.□.0	H4Q.44.237.□.0	237	264	≈ 2.28	≈ 1.76
E4Q.44.250.□.0	H4Q.44.250.□.0	250	276	≈ 2.32	≈ 1.78
E4Q.44.262.□.0	H4Q.44.262.□.0	262	289	≈ 2.36	≈ 1.81
E4Q.44.275.□.0	H4Q.44.275.□.0	275	301	≈ 2.41	≈ 1.83
E4Q.44.287.□.0	H4Q.44.287.□.0	287	314	≈ 2.46	≈ 1.85
E4Q.44.300.□.0	H4Q.44.300.□.0	300	326	≈ 2.51	≈ 1.88
E4Q.44.312.□.0*	H4Q.44.312.□.0*	312	339	≈ 2.55	≈ 1.90
E4Q.44.325.□.0*	H4Q.44.325.□.0*	325	351	≈ 2.60	≈ 1.92
E4Q.44.337.□.0*	H4Q.44.337.□.0*	337	364	≈ 2.64	≈ 1.94
E4Q.44.350.□.0	H4Q.44.350.□.0	350	376	≈ 2.69	≈ 1.97
E4Q.44.362.□.0*	H4Q.44.362.□.0*	362	389	≈ 2.73	≈ 1.99
E4Q.44.375.□.0	H4Q.44.375.□.0	375	401	≈ 2.78	≈ 2.01
E4Q.44.387.□.0	H4Q.44.387.□.0	387	414	≈ 2.82	≈ 2.03
E4Q.44.400.□.0	H4Q.44.400.□.0	400	426	≈ 2.90	≈ 2.08

Available bend radii *R* [mm] | 075 | 100 | 115 | 125 | 150 | 160 | 175 | 200 | 250 | 300 | 350 |

*Width available upon request, please consult igus® for delivery time.

Order key

E4Q.44.150.150.0

Series / Type	Inner height	Width index	Bend radius	Colour index

Order example:
Complete Part No. with the required radius □. Example:
E4Q.44.150.150.0 = crossbars removable along the inner and outer radius
H4Q.44.150.150.0 = crossbars removable along the inner and outer radius
Order index for colour options ▶ **www.igus.eu/info-colours**

Available from stock
Upon request

Unsupported applications | Short travels

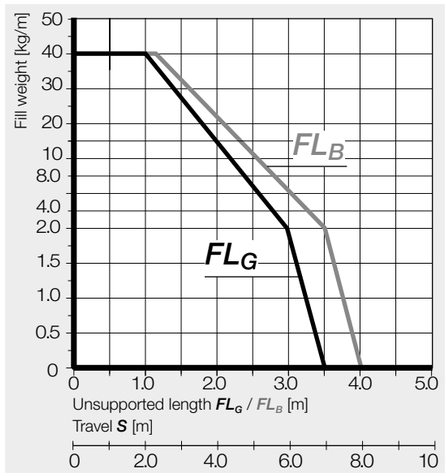

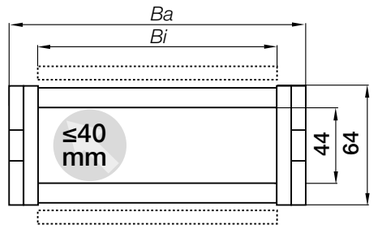

Inner height [mm]	**44**
Pitch [mm]	**67**
Links/m [pc.]	**15**
corresponds to [mm]	**1,005**
e-chain® length	$L_K = S/2 + K$

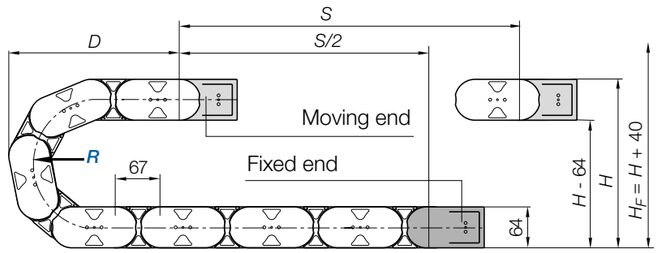

R	075	100	115	125	150	160	175	200	250	300	350
H $^{-0}_{+25}$	214	264	294	314	364	384	414	464	564	664	764
D	208	233	248	258	283	293	308	333	383	433	483
K	370	450	500	530	610	640	685	765	920	1,080	1,235

The required clearance height: $H_F = H + 40$mm (with 3.0kg/m fill weight)

Gliding applications | For travel lengths from 12m to max. 300m

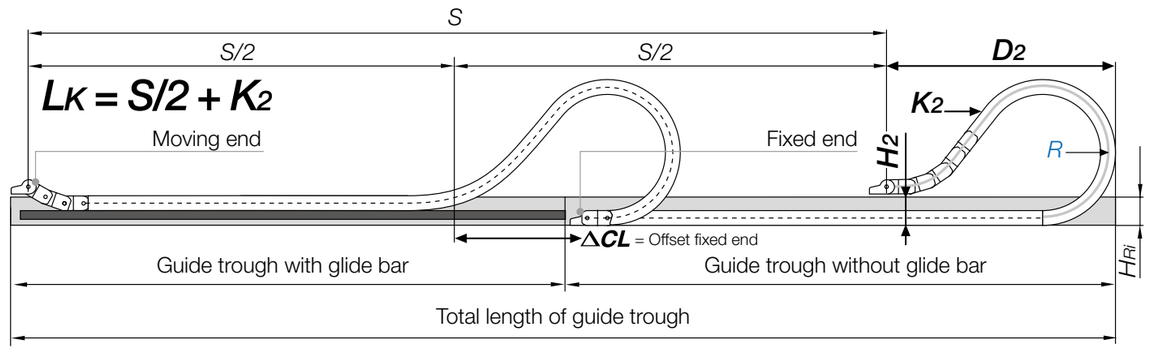

R	075	100	115	125	150	160	175	200	250	300	350
H_2	150	186	186	186	186	186	186	186	186	186	186
D_2 $^{+25}$	174	390	435	475	570	620	675	780	1,030	1,150	1,500
K_2	370	603	737	804	938	1,072	1,139	1,340	1,675	1,943	2,412
ΔCL	–	170	200	230	300	340	380	460	660	730	1,030

Note: In case of travels between 8 and 12m we recommend an e-chain® with a longer unsupported length.

Available from stock
Upon request

KMA mounting brackets | Attachment from any side | Pivoting

Fixed end		Moving end	Front view of KMA
E4Q.442 ... ✱.1	One end pivoting[1)]	E4Q.442 ... ✱.2	
E4Q.440 ... ✱.1	Both ends pivoting	E4Q.440 ... ✱.2	

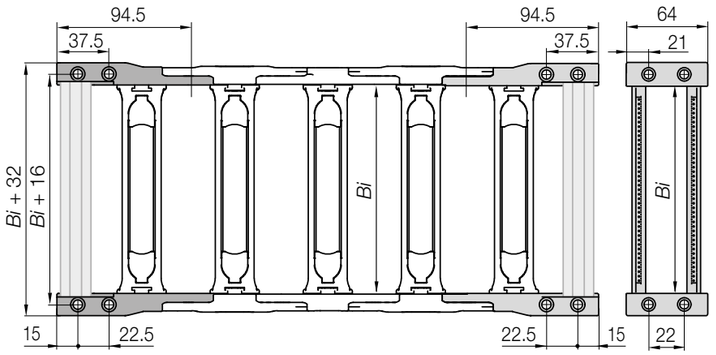

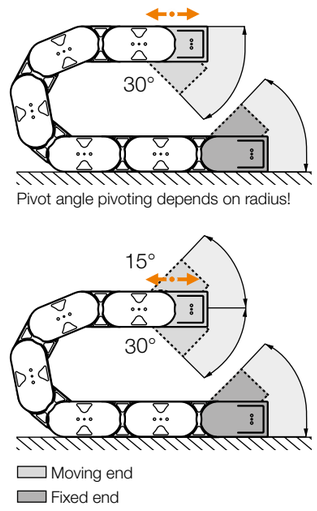

Width index	KMA full set: Part No. one end pivoting[1)]	Part No. both ends pivoting	*Bi* [mm]
075.	E4Q.442.075.✱.12.☐	E4Q.440.075.✱.12.☐	75
087.	E4Q.442.087.✱.12.☐	E4Q.440.087.✱.12.☐	87
100.	E4Q.442.100.✱.12.☐	E4Q.440.100.✱.12.☐	100
108.	E4Q.442.108.✱.12.☐	E4Q.440.108.✱.12.☐	108
112.	E4Q.442.112.✱.12.☐	E4Q.440.112.✱.12.☐	112
125.	E4Q.442.125.✱.12.☐	E4Q.440.125.✱.12.☐	125
137.	E4Q.442.137.✱.12.☐	E4Q.440.137.✱.12.☐	137
150.	E4Q.442.150.✱.12.☐	E4Q.440.150.✱.12.☐	150
162.	E4Q.442.162.✱.12.☐	E4Q.440.162.✱.12.☐	162
168.	E4Q.442.168.✱.12.☐	E4Q.440.168.✱.12.☐	168
175.	E4Q.442.175.✱.12.☐	E4Q.440.175.✱.12.☐	175
187.	E4Q.442.187.✱.12.☐	E4Q.440.187.✱.12.☐	187
200.	E4Q.442.200.✱.12.☐	E4Q.440.200.✱.12.☐	200
212.	E4Q.442.212.✱.12.☐	E4Q.440.212.✱.12.☐	212
225.	E4Q.442.225.✱.12.☐	E4Q.440.225.✱.12.☐	225

Width index	KMA full set: Part No. one end pivoting[1)]	Part No. both ends pivoting	*Bi* [mm]
237.	E4Q.442.237.✱.12.☐	E4Q.440.237.✱.12.☐	237
250.	E4Q.442.250.✱.12.☐	E4Q.440.250.✱.12.☐	250
262.	E4Q.442.262.✱.12.☐	E4Q.440.262.✱.12.☐	262
275.	E4Q.442.275.✱.12.☐	E4Q.440.275.✱.12.☐	275
287.	E4Q.442.287.✱.12.☐	E4Q.440.287.✱.12.☐	287
300.	E4Q.442.300.✱.12.☐	E4Q.440.300.✱.12.☐	300
312.	E4Q.442.312.✱.12.☐*	E4Q.440.312.✱.12.☐*	312
325.	E4Q.442.325.✱.12.☐*	E4Q.440.325.✱.12.☐*	325
337.	E4Q.442.337.✱.12.☐*	E4Q.440.337.✱.12.☐*	337
350.	E4Q.442.350.✱.12.☐	E4Q.440.350.✱.12.☐	350
362.	E4Q.442.362.✱.12.☐*	E4Q.440.362.✱.12.☐*	362
375.	E4Q.442.375.✱.12.☐	E4Q.440.375.✱.12.☐	375
387.	E4Q.442.387.✱.12.☐	E4Q.440.387.✱.12.☐	387
400.	E4Q.442.400.✱.12.☐	E4Q.440.400.✱.12.☐	400

1) One end pivoting - standard for E4Q mounting brackets.

*Width available upon request, please consult igus® for delivery time.

(KMA = polymer metal mounting bracket)

Available from stock

Upon request

KMA mounting brackets | Attachment from any side | Pivoting | Locking

Note ✱: The e-chains® may end with either an inner or an outer side link. An outer side link should always be the first e-chain® link at the moving end. Please specify the index 1 (for odd) or 2 (for even) depending on an even or odd number of links required.

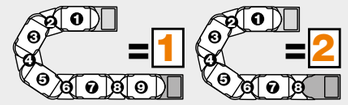

Order key

E4Q.442.150.2.12.C.A2

Series	Width index	Even number of links	Full set	C-profile option	Pre-fitted

Note: Possible orientations for KMA mounting brackets. For mounting brackets pre-fitted **without strain relief**, please add index **.A** . For types pre-fitted **with strain relief** please add index **.A1**, **.A2**, **.A3** or **.A4**.



For the C-profile option please add index **.C**.

Available from stock

Upon request

Interior separation | Increase cable service life

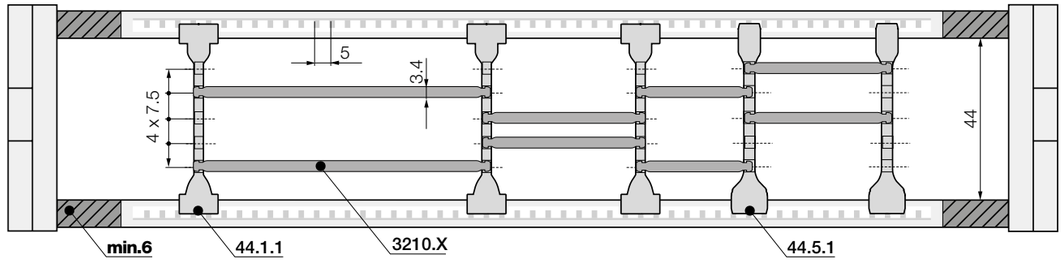

Note: Please be aware of the minimum lateral gap to the side links! **e-chain®: 6mm**
As standard separators are fitted every 2nd e-chain® link!



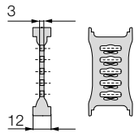

Part No.	
Standard separator	
unassembled	**44.1**
assembled	**44.1.1**

For all applications

Standard separator with a wide base for maximum holding force.



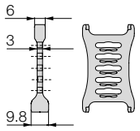

Part No.	
Notch separator	
unassembled	**44.5**
assembled	**44.5.1**

Locks securely in preset increments

Notch separator for exact positioning.
Recommended for side-mounted applications.

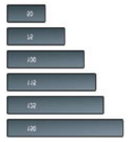

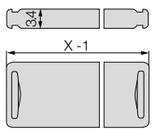

Part No.	
Shelf	
unassembled	**3200.X**
assembled	**3210.X**

Horizontal separation

Full-width shelf locks securely into separators at both ends, giving a fixed width. Can be used as full-width or modular shelving.

Width [mm]	Part No. unassembled	Part No. assembled
050	**3200.050**	**3210.050**
075	**3200.075**	**3210.075**
100	**3200.100**	**3210.100**
115	**3200.115**	**3210.115**
125	**3200.125**	**3210.125**
150	**3200.150**	**3210.150**
175	**3200.175**	**3210.175**
200	**3200.200**	**3210.200**
225	**3200.225**	**3210.225**
250	**3200.250**	**3210.250**

Available from stock
Upon request

E4Q | Series E4Q.44 / H4Q.44

E4Q.44
H4Q.44

Universal interior separation | Modular shelving for complete flexibility

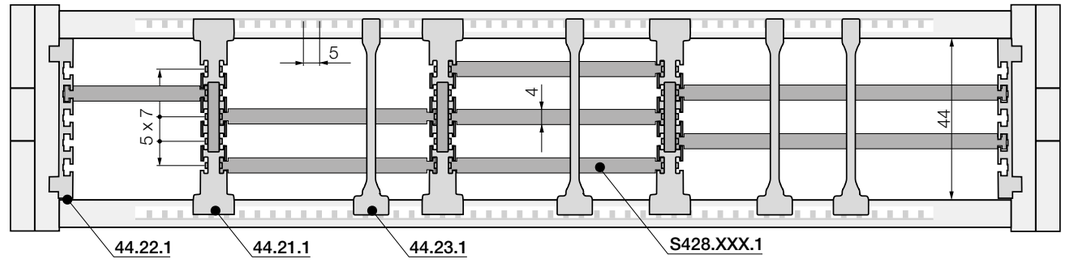

No lateral gap to side links necessary.
As standard separators are fitted every 2nd e-chain® link!



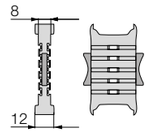

Part No.	
Universal middle plate	
unassembled	**44.21**
assembled	**44.21.1**

Universal middle plates

The shelves can be inserted from both sides. The shelves are locked in place by means of the integrated slider and automatically when the crossbar is fitted.



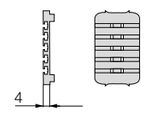

Part No.	
Universal side plate	
unassembled	**44.22**
assembled	**44.22.1**

Universal side plates

Allow modular shelving right up to the side links.
Shelves can be inserted from both sides.



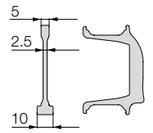

Part No.	
Separator	
unassembled	**44.23**
assembled	**44.23.1**

Separators for universal interior separation

For additional vertical partitioning of the system. When using the separator, the shelves can only be removed in one direction.



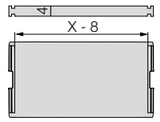

Part No.	
Partial shelf[1)]	
unassembled	**S428.XXX**
assembled	**S428.XXX.1**

Separators[1)] for universal interior separation

Shelves of various widths can be arranged in steps of 7mm

Width [mm]	Part No. unassembled	Part No. assembled
018	**S428.018**	**S428.018.1**
023*	S428.023	S428.023.1
025	**S428.025**	**S428.025.1**
028*	S428.028	S428.028.1
033	**S428.033**	**S428.033.1**
044	**S428.044**	**S428.044.1**
050	**S428.050**	**S428.050.1**
058	**S428.058**	**S428.058.1**
062	**S428.062**	**S428.062.1**
068	**S428.068**	**S428.068.1**
070	**S428.070**	**S428.070.1**
075	**S428.075**	**S428.075.1**
083	**S428.083**	**S428.083.1**
087	**S428.087**	**S428.087.1**
100	**S428.100**	**S428.100.1**
108	**S428.108**	**S428.108.1**
125	**S428.125**	**S428.125.1**
150	**S428.150**	**S428.150.1**
175	**S428.175**	**S428.175.1**
200	**S428.200**	**S428.200.1**
208*	S428.208	S428.208.1

* Available upon request, please consult igus® for delivery time.

1) Note: The available width of the shelf S428.XXX deviates by 8mm from the width stated in the Part No. With the shelf S428.050, e.g. the space between the separators is 42mm.

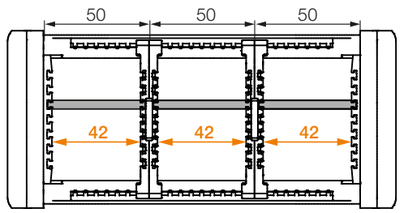

Product range

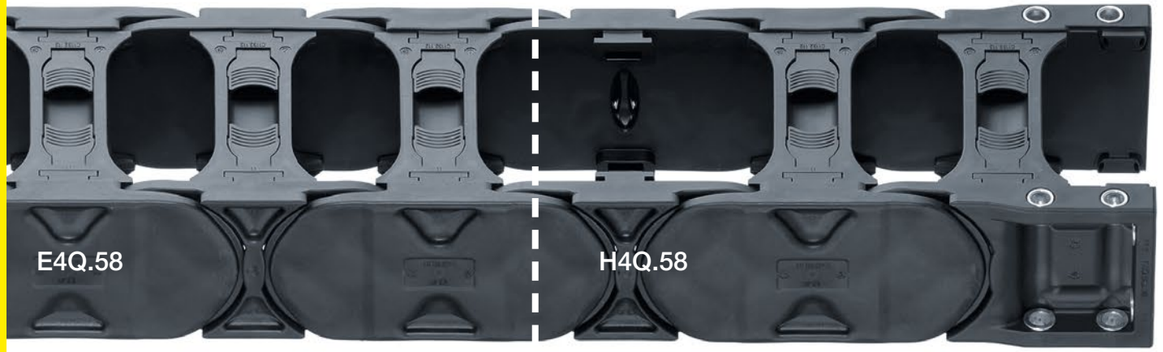

Part No. e-chains® with crossbars every link	Part No. e-chains® with crossbars every 2nd link	*Bi* [mm]	*Ba* [mm]	E4Q.58 [kg/m]	H4Q.58 [kg/m]
E4Q.58.100.□□.0	H4Q.58.100.□□.0	100	134	≈ 3.66	≈ 3.31
E4Q.58.112.□□.0	H4Q.58.112.□□.0	112	147	≈ 3.72	≈ 3.34
E4Q.58.125.□□.0	H4Q.58.125.□□.0	125	159	≈ 3.75	≈ 3.36
E4Q.58.137.□□.0	H4Q.58.137.□□.0	137	172	≈ 3.80	≈ 3.39
E4Q.58.150.□□.0	H4Q.58.150.□□.0	150	184	≈ 3.89	≈ 3.43
E4Q.58.162.□□.0	H4Q.58.162.□□.0	162	197	≈ 3.95	≈ 3.46
E4Q.58.175.□□.0	H4Q.58.175.□□.0	175	209	≈ 3.98	≈ 3.48
E4Q.58.187.□□.0	H4Q.58.187.□□.0	187	222	≈ 4.02	≈ 3.50
E4Q.58.200.□□.0	H4Q.58.200.□□.0	200	234	≈ 4.14	≈ 3.55
E4Q.58.212.□□.0	H4Q.58.212.□□.0	212	247	≈ 4.19	≈ 3.58
E4Q.58.225.□□.0	H4Q.58.225.□□.0	225	259	≈ 4.21	≈ 3.59
E4Q.58.237.□□.0	H4Q.58.237.□□.0	237	272	≈ 4.24	≈ 3.61
E4Q.58.250.□□.0	H4Q.58.250.□□.0	250	284	≈ 4.30	≈ 3.63
E4Q.58.262.□□.0	H4Q.58.262.□□.0	262	297	≈ 4.33	≈ 3.65
E4Q.58.275.□□.0	H4Q.58.275.□□.0	275	309	≈ 4.41	≈ 3.69
E4Q.58.287.□□.0	H4Q.58.287.□□.0	287	322	≈ 4.44	≈ 3.71
E4Q.58.300.□□.0	H4Q.58.300.□□.0	300	334	≈ 4.52	≈ 3.74
E4Q.58.312.□□.0	H4Q.58.312.□□.0	312	347	≈ 4.57	≈ 3.77
E4Q.58.325.□□.0	H4Q.58.325.□□.0	325	359	≈ 4.63	≈ 3.80
E4Q.58.337.□□.0	H4Q.58.337.□□.0	337	372	≈ 4.68	≈ 3.82
E4Q.58.350.□□.0	H4Q.58.350.□□.0	350	384	≈ 4.73	≈ 3.85
E4Q.58.362.□□.0	H4Q.58.362.□□.0	362	397	≈ 4.79	≈ 3.88
E4Q.58.375.□□.0	H4Q.58.375.□□.0	375	409	≈ 4.84	≈ 3.90
E4Q.58.387.□□.0	H4Q.58.387.□□.0	387	422	≈ 4.90	≈ 3.93
E4Q.58.400.□□.0	H4Q.58.400.□□.0	400	434	≈ 4.95	≈ 3.96
E4Q.58.412.□□.0	H4Q.58.412.□□.0	412	447	≈ 5.01	≈ 3.99
E4Q.58.425.□□.0	H4Q.58.425.□□.0	425	459	≈ 5.07	≈ 4.02
E4Q.58.437.□□.0*	H4Q.58.437.□□.0*	437	472	≈ 5.12	≈ 4.04
E4Q.58.450.□□.0	H4Q.58.450.□□.0	450	484	≈ 5.17	≈ 4.07
E4Q.58.462.□□.0*	H4Q.58.462.□□.0*	462	497	≈ 5.22	≈ 4.10
E4Q.58.475.□□.0*	H4Q.58.475.□□.0*	475	509	≈ 5.28	≈ 4.12
E4Q.58.487.□□.0*	H4Q.58.487.□□.0*	487	522	≈ 5.34	≈ 4.15
E4Q.58.500.□□.0	H4Q.58.500.□□.0	500	534	≈ 5.39	≈ 4.18
E4Q.58.512.□□.0*	H4Q.58.512.□□.0*	512	547	≈ 5.44	≈ 4.21
E4Q.58.525.□□.0*	H4Q.58.525.□□.0*	525	559	≈ 5.50	≈ 4.23
E4Q.58.537.□□.0*	H4Q.58.537.□□.0*	537	572	≈ 5.55	≈ 4.26
E4Q.58.550.□□.0*	H4Q.58.550.□□.0*	550	584	≈ 5.61	≈ 4.29
E4Q.58.600.□□.0*	H4Q.58.600.□□.0*	600	634	≈ 5.81	≈ 4.39

Available bend radii *R* [mm] | 135 | 150 | 175 | 200 | 240 | 250 | 300 | 350 | 400 | 450 | 500 |

*Width available upon request, please consult igus® for delivery time.

Order key

E4Q.58.150.150.0

Series / Type	Inner height	Width index	Bend radius	Colour index

Order example:
Complete Part No. with the required radius □□. Example:
E4Q.58.150.150.0 = crossbars removable along the inner and outer radius
H4Q.58.150.150.0 = crossbars removable along the inner and outer radius
Order index for colour options ▶ **www.igus.eu/info-colours**

Available from stock
Upon request

Unsupported applications | Short travels

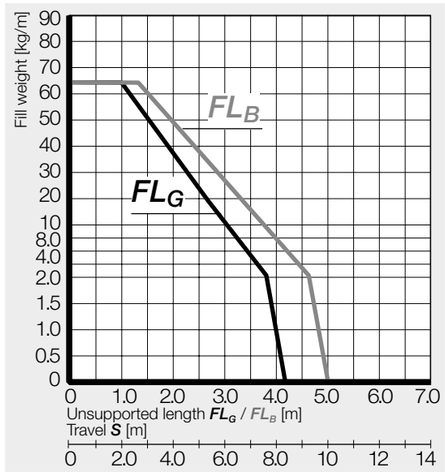

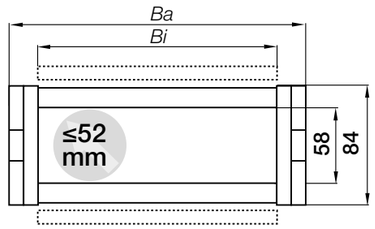

Inner height [mm]	58
Pitch [mm]	91
Links/m [pc.]	11
corresponds to [mm]	1,001
e-chain® length	$L_K = S/2 + K$

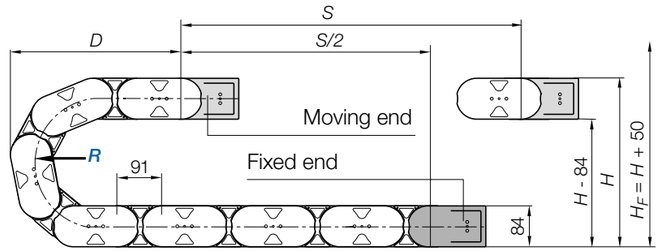

R	135	150	175	200	240	250	300	350	400	450	500
H $^{-0}_{+25}$	354	384	434	484	564	584	684	784	884	984	1,084
D	314	329	354	379	419	429	479	529	579	629	679
K	610	655	735	815	940	970	1,125	1,285	1,440	1,600	1.755

The required clearance height: $H_F = H + 50$mm (with 3.0kg/m fill weight)

Gliding applications | For travel lengths from 12m to max. 400m

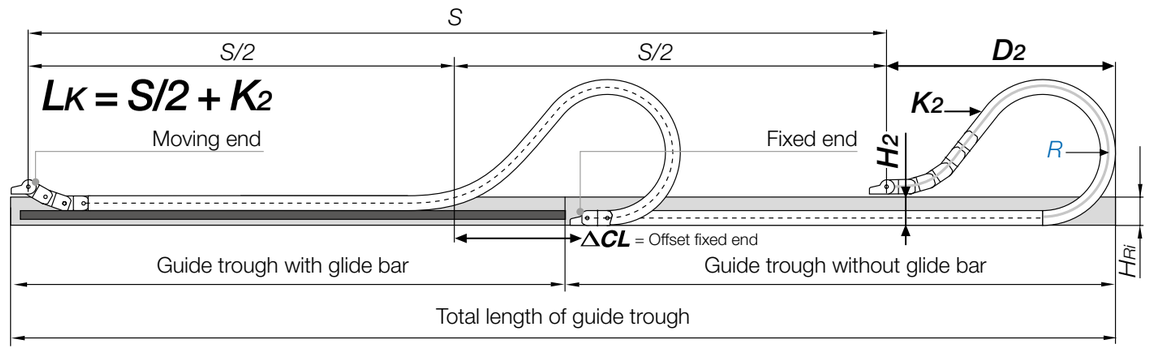

R	135	150	175	200	240	250	300	350	400	450	500
H_2	270	266	266	266	266	266	266	266	266	266	266
D_2 $^{+50}$	268	450	580	710	900	980	1,180	1,440	1,530	1,700	1,850
K_2	610	819	1,092	1,274	1,547	1,638	2,002	2,275	2,548	2,912	3,276
ΔCL	–	159	259	359	509	559	709	909	959	1,059	1,159

Note: In case of travels between 10 and 12m we recommend an e-chain® with a longer unsupported length.

Available from stock
Upon request

KMA mounting brackets | Attachment from any side | Pivoting

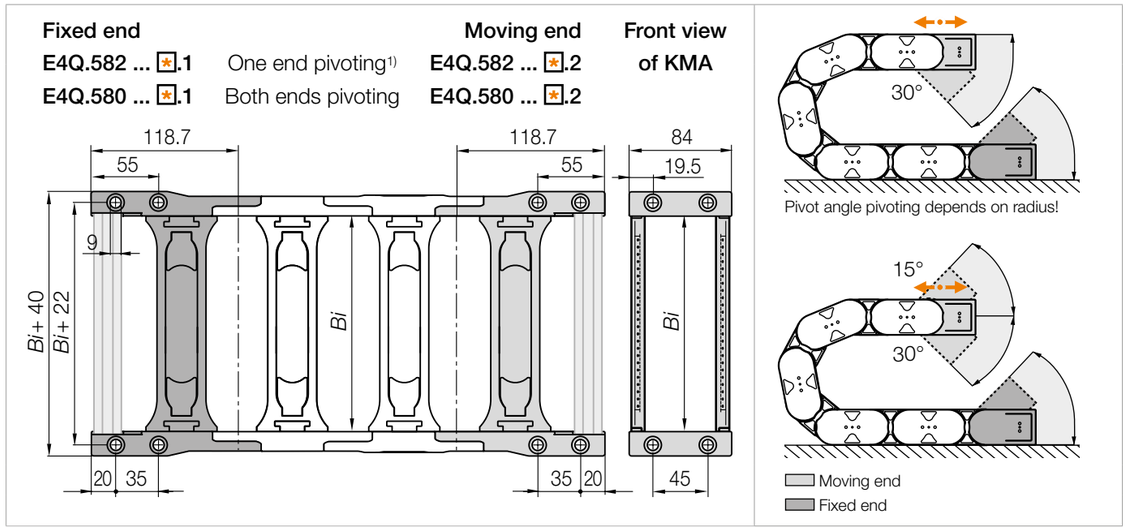

Width index	KMA full set		
	Part No. one end pivoting1)	Part No. both ends pivoting	*Bi* [mm]
100.	E4Q.582.100.✱.12.☐	E4Q.580.100.✱.12.☐	100
112.	E4Q.582.112.✱.12.☐	E4Q.580.112.✱.12.☐	112
125.	E4Q.582.125.✱.12.☐	E4Q.580.125.✱.12.☐	125
137.	E4Q.582.137.✱.12.☐	E4Q.580.137.✱.12.☐	137
150.	E4Q.582.150.✱.12.☐	E4Q.580.150.✱.12.☐	150
162.	E4Q.582.162.✱.12.☐	E4Q.580.162.✱.12.☐	162
175.	E4Q.582.175.✱.12.☐	E4Q.580.175.✱.12.☐	175
187.	E4Q.582.187.✱.12.☐	E4Q.580.187.✱.12.☐	187
200.	E4Q.582.200.✱.12.☐	E4Q.580.200.✱.12.☐	200
212.	E4Q.582.212.✱.12.☐	E4Q.580.212.✱.12.☐	212
225.	E4Q.582.225.✱.12.☐	E4Q.580.225.✱.12.☐	225
237.	E4Q.582.237.✱.12.☐	E4Q.580.237.✱.12.☐	237
250.	E4Q.582.250.✱.12.☐	E4Q.580.250.✱.12.☐	250
262.	E4Q.582.262.✱.12.☐	E4Q.580.262.✱.12.☐	262
275.	E4Q.582.275.✱.12.☐	E4Q.580.275.✱.12.☐	275
287.	E4Q.582.287.✱.12.☐	E4Q.580.287.✱.12.☐	287
300.	E4Q.582.300.✱.12.☐	E4Q.580.300.✱.12.☐	300
312.	E4Q.582.312.✱.12.☐	E4Q.580.312.✱.12.☐	312
325.	E4Q.582.325.✱.12.☐	E4Q.580.325.✱.12.☐	325

Width index	KMA full set		
	Part No. one end pivoting1)	Part No. both ends pivoting	*Bi* [mm]
337.	E4Q.582.337.✱.12.☐	E4Q.580.337.✱.12.☐	337
350.	E4Q.582.350.✱.12.☐	E4Q.580.350.✱.12.☐	350
362.	E4Q.582.362.✱.12.☐	E4Q.580.362.✱.12.☐	362
375.	E4Q.582.375.✱.12.☐	E4Q.580.375.✱.12.☐	375
387.	E4Q.582.387.✱.12.☐	E4Q.580.387.✱.12.☐	387
400.	E4Q.582.400.✱.12.☐	E4Q.580.400.✱.12.☐	400
412.	E4Q.582.412.✱.12.☐	E4Q.580.412.✱.12.☐	412
425.	E4Q.582.425.✱.12.☐	E4Q.580.425.✱.12.☐	425
437.	E4Q.582.437.✱.12.☐*	E4Q.580.437.✱.12.☐*	437
450.	E4Q.582.450.✱.12.☐	E4Q.580.450.✱.12.☐	450
462.	E4Q.582.462.✱.12.☐*	E4Q.580.462.✱.12.☐*	462
475.	E4Q.582.475.✱.12.☐*	E4Q.580.475.✱.12.☐*	475
487.	E4Q.582.487.✱.12.☐*	E4Q.580.487.✱.12.☐*	487
500.	E4Q.582.500.✱.12.☐	E4Q.580.500.✱.12.☐	500
512.	E4Q.582.512.✱.12.☐*	E4Q.580.512.✱.12.☐*	512
525.	E4Q.582.525.✱.12.☐*	E4Q.580.525.✱.12.☐*	525
537.	E4Q.582.537.✱.12.☐*	E4Q.580.537.✱.12.☐*	537
550.	E4Q.582.550.✱.12.☐*	E4Q.580.550.✱.12.☐*	550
600.	E4Q.582.600.✱.12.☐*	E4Q.580.600.✱.12.☐*	600

1) One end pivoting - standard for E4Q mounting brackets.

*Width available upon request, please consult igus® for delivery time.

(KMA = polymer metal mounting bracket)

Available from stock

Upon request

KMA mounting brackets | Attachment from any side | Pivoting | Locking

Note ✱: The e-chains® may end with either an inner or an outer side link. An outer side link should always be the first e-chain® link at the moving end. Please specify the index 1 (for odd) or 2 (for even) depending on an even or odd number of links required.

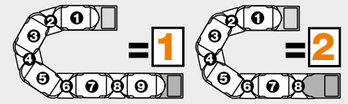

Order key

E4Q.582.150.2.12.C.A2

Series	Width index	Even number of links	Full set	C-profile option	Pre-fitted

Note: Possible orientations for KMA mounting brackets. For mounting brackets pre-fitted **without strain relief**, please add index **.A** . For types pre-fitted **with strain relief** please add index **.A1**, **.A2**, **.A3** or **.A4**.



For the C-profile option please add index **.C**.

Available from stock

Upon request

Interior separation | Increase cable service life

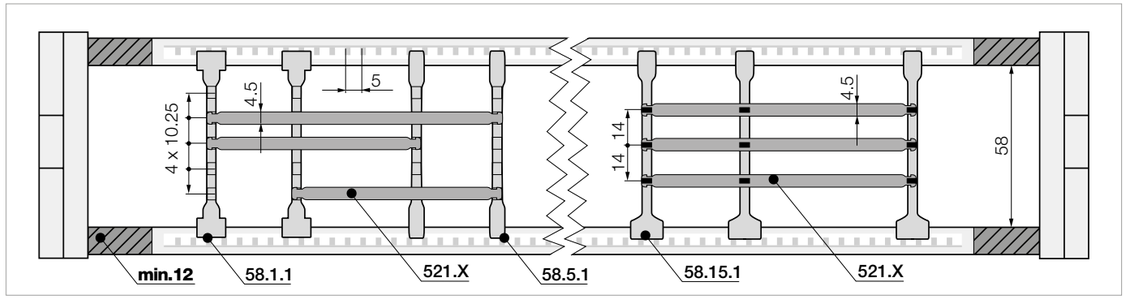

Note: Please be aware of the minimum lateral gap to the side links! **e-chain®: 12mm**
As standard separators are fitted every 2nd e-chain® link!


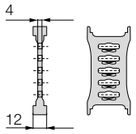

Part No.	
Standard separator	
unassembled	**58.1**
assembled	**58.1.1**

For all applications
Standard separator with a wide base for maximum holding force.


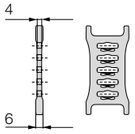

Part No.	
Notch separator	
unassembled	**58.5**
assembled	**58.5.1**

Locks securely in preset increments
Notch separator for exact positioning. Recommended for side-mounted applications.


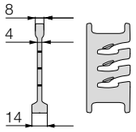

Part No.	
Lean notch separator	
unassembled	**58.15**
assembled	**58.15.1**

Lean notch separators[1)]
Quick fitting of shelves in several layers. Snaps securely into the crossbar in 5mm steps to be positioned securely.

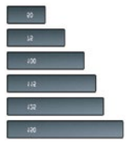
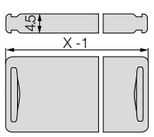

Part No.	
Shelf	
unassembled	**520.X**
assembled	**521.X**

Horizontal separation
Full-width shelf locks securely into separators at both ends, giving a fixed width. Can be used as full-width or modular shelving.

Width [mm]	Part No. unassembled	Part No. assembled
050	**520.050**	**521.050**
065	**520.065**	**521.065**
075	**520.075**	**521.075**
100	**520.100**	**521.100**
125	**520.125**	**521.125**
150	**520.150**	**521.150**
175	**520.175**	**521.175**
200	**520.200**	**521.200**
225	**520.225**	**521.225**
250	**520.250**	**521.250**
300	**520.300**	**521.300**
350	**520.350**	**521.350**
375	**520.375**	**521.375**
387	**520.387**	**521.387**
450	**520.450**	**521.450**



Lean notch separator for even faster filling: quickly insert several layers of cables into the e-chain® and reduce the installation time by up to 50%. Measured on a 4m long e-chain® fitted with 12 cables. **1) Note: Please combine a maximum of four lean notch separators with one shelf. Not suitable for side-mounted e-chains®!**

Available from stock
Upon request

Universal interior separation | Modular shelving for complete flexibility

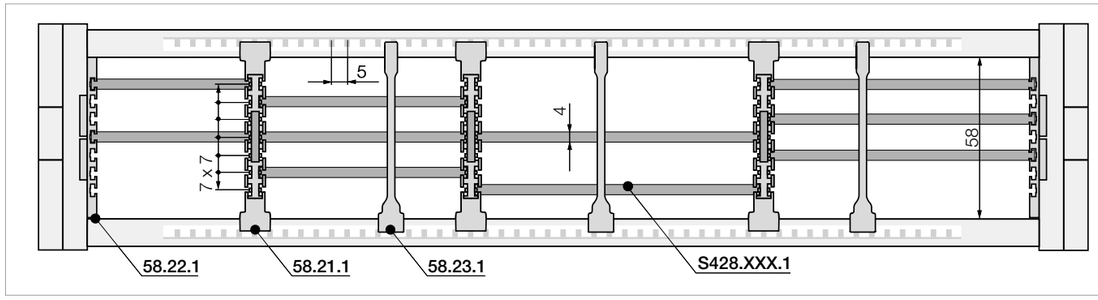

No lateral gap to side links necessary.
As standard separators are fitted every 2nd e-chain® link!


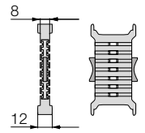

Part No.	
Universal middle plate	
unassembled	**58.21**
assembled	**58.21.1**

Universal middle plates
The shelves can be inserted from both sides. The shelves are locked in place by means of the integrated slider and automatically when the crossbar is fitted.


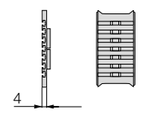

Part No.	
Universal side plate	
unassembled	**58.22**
assembled	**58.22.1**

Universal side plates
Allow modular shelving right up to the side links. Shelves can be inserted from both sides.


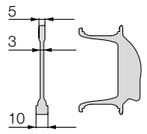

Part No.	
Separator	
unassembled	**58.23**
assembled	**58.23.1**

Separators for universal interior separation
For additional vertical partitioning of the system. When using the separator, the shelves can only be removed in one direction.


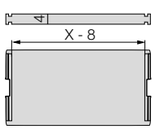

Part No.	
Partial shelf[1)]	
unassembled	**S428.XXX**
assembled	**S428.XXX.1**

Separators[1)] for universal interior separation
Shelves of various widths can be arranged in steps of 7mm

Width [mm]	Part No. unassembled	Part No. assembled
018	**S428.018**	**S428.018.1**
023*	**S428.023**	**S428.023.1**
025	**S428.025**	**S428.025.1**
028*	**S428.028**	**S428.028.1**
033	**S428.033**	**S428.033.1**
044	**S428.044**	**S428.044.1**
050	**S428.050**	**S428.050.1**
058	**S428.058**	**S428.058.1**
062	**S428.062**	**S428.062.1**
068	**S428.068**	**S428.068.1**
070	**S428.070**	**S428.070.1**
075	**S428.075**	**S428.075.1**
083	**S428.083**	**S428.083.1**
087	**S428.087**	**S428.087.1**
100	**S428.100**	**S428.100.1**
108	**S428.108**	**S428.108.1**
125	**S428.125**	**S428.125.1**
150	**S428.150**	**S428.150.1**
175	**S428.175**	**S428.175.1**
200	**S428.200**	**S428.200.1**
208*	**S428.208**	**S428.208.1**

* Available upon request, please consult igus® for delivery time.

1) Note: The available width of the shelf S428.XXX deviates by 8mm from the width stated in the Part No. With the shelf S428.050, e.g. the space between the separators is 42mm.

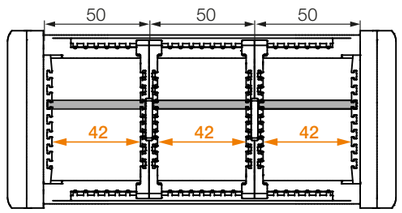

Product range

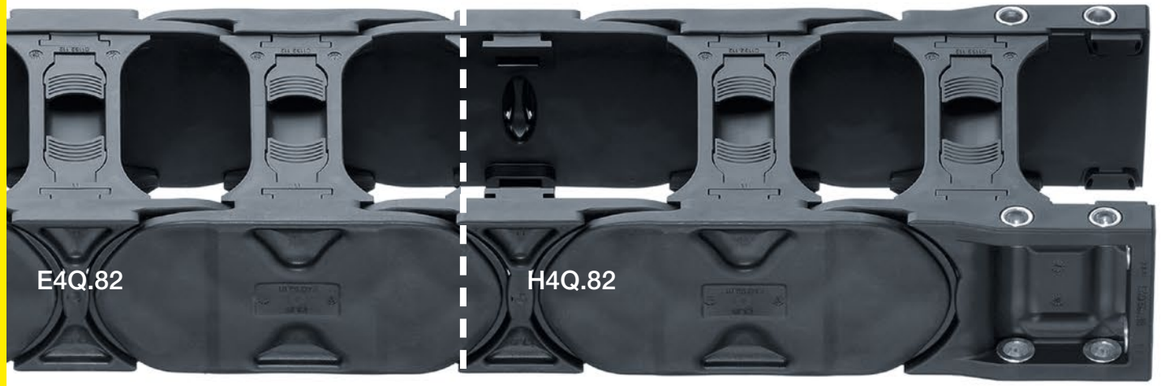

Part No. e-chains® with crossbars every link	Part No. e-chains® with crossbars every 2nd link	*Bi* [mm]	*Ba* [mm]	E4Q.82 [kg/m]	H4Q.82 [kg/m]
E4Q.82.100.□.0	H4Q.82.100.□.0	100	150	≈ 6.05	≈ 5.77
E4Q.82.112.□.0	H4Q.82.112.□.0	112	163	≈ 6.10	≈ 5.79
E4Q.82.125.□.0	H4Q.82.125.□.0	125	175	≈ 6.12	≈ 5.81
E4Q.82.137.□.0	H4Q.82.137.□.0	137	188	≈ 6.17	≈ 5.83
E4Q.82.150.□.0	H4Q.82.150.□.0	150	200	≈ 6.24	≈ 5.87
E4Q.82.162.□.0	H4Q.82.162.□.0	162	213	≈ 6.29	≈ 5.89
E4Q.82.175.□.0	H4Q.82.175.□.0	175	225	≈ 6.32	≈ 5.90
E4Q.82.187.□.0	H4Q.82.187.□.0	187	238	≈ 6.35	≈ 5.92
E4Q.82.200.□.0	H4Q.82.200.□.0	200	250	≈ 6.44	≈ 5.97
E4Q.82.212.□.0	H4Q.82.212.□.0	212	263	≈ 6.49	≈ 5.99
E4Q.82.225.□.0	H4Q.82.225.□.0	225	275	≈ 6.50	≈ 6.00
E4Q.82.237.□.0	H4Q.82.237.□.0	237	288	≈ 6.53	≈ 6.01
E4Q.82.250.□.0	H4Q.82.250.□.0	250	300	≈ 6.57	≈ 6.03
E4Q.82.262.□.0	H4Q.82.262.□.0	262	313	≈ 6.62	≈ 6.05
E4Q.82.275.□.0	H4Q.82.275.□.0	275	325	≈ 6.66	≈ 6.08
E4Q.82.287.□.0	H4Q.82.287.□.0	287	338	≈ 6.71	≈ 6.10
E4Q.82.300.□.0	H4Q.82.300.□.0	300	350	≈ 6.75	≈ 6.12
E4Q.82.312.□.0	H4Q.82.312.□.0	312	363	≈ 6.80	≈ 6.14
E4Q.82.325.□.0	H4Q.82.325.□.0	325	375	≈ 6.84	≈ 6.17
E4Q.82.337.□.0	H4Q.82.337.□.0	337	388	≈ 6.89	≈ 6.19
E4Q.82.350.□.0	H4Q.82.350.□.0	350	400	≈ 6.93	≈ 6.21
E4Q.82.362.□.0	H4Q.82.362.□.0	362	413	≈ 6.97	≈ 6.23
E4Q.82.375.□.0	H4Q.82.375.□.0	375	425	≈ 7.02	≈ 6.25
E4Q.82.387.□.0	H4Q.82.387.□.0	387	438	≈ 7.07	≈ 6.28
E4Q.82.400.□.0	H4Q.82.400.□.0	400	450	≈ 7.11	≈ 6.30
E4Q.82.412.□.0	H4Q.82.412.□.0	412	463	≈ 7.15	≈ 632
E4Q.82.425.□.0	H4Q.82.425.□.0	425	475	≈ 7.20	≈ 6.35
E4Q.82.437.□.0*	H4Q.82.437.□.0*	437	488	≈ 7.24	≈ 6.37
E4Q.82.450.□.0	H4Q.82.450.□.0	450	500	≈ 7.29	≈ 6.39
E4Q.82.462.□.0*	H4Q.82.462.□.0*	462	513	≈ 7.33	≈ 6.41
E4Q.82.475.□.0*	H4Q.82.475.□.0*	475	525	≈ 7.38	≈ 6.43
E4Q.82.487.□.0*	H4Q.82.487.□.0*	487	538	≈ 7.42	≈ 6.46
E4Q.82.500.□.0	H4Q.82.500.□.0	500	550	≈ 7.47	≈ 6.48
E4Q.82.512.□.0*	H4Q.82.512.□.0*	512	563	≈ 7.51	≈ 6.50
E4Q.82.525.□.0*	H4Q.82.525.□.0*	525	575	≈ 7.56	≈ 6.52
E4Q.82.537.□.0*	H4Q.82.537.□.0*	537	588	≈ 7.60	≈ 6.54
E4Q.82.550.□.0*	H4Q.82.550.□.0*	550	600	≈ 7.65	≈ 6.57
E4Q.82.600.□.0*	H4Q.82.600.□.0*	600	650	≈ 7.74	≈ 6.61

Available bend radii *R* [mm] | 150 | 175 | 200 | 250 | 300 | 350 | 400 | 450 | 500 | 550 | 600 | 1.000 |

*Width available upon request, please consult igus® for delivery time.

Order key

E4Q.82.150.150.0

Series / Type	Inner height	Width index	Bend radius	Colour index

Order example:
Complete Part No. with the required radius □ *R*. Example:
E4Q.82.150.150.0 = crossbars removable along the inner and outer radius
H4Q.82.150.150.0 = crossbars removable along the inner and outer radius
Order index for colour options ▶ **www.igus.eu/info-colours**

Available from stock
Upon request

Unsupported applications | Short travels

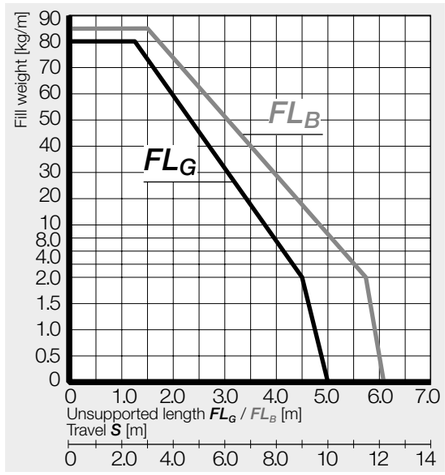

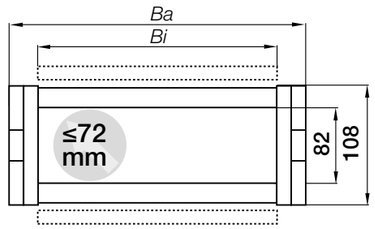

Inner height [mm]	**82**
Pitch [mm]	**111**
Links/m [pc.]	**9**
corresponds to [mm]	**999**
e-chain® length	$L_K = S/2 + K$

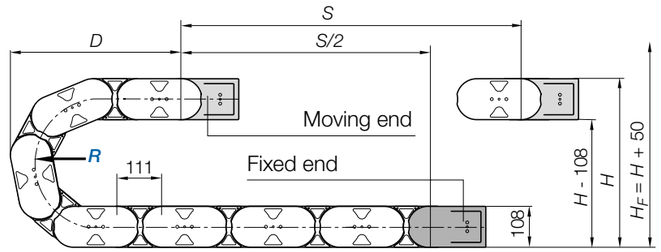

R	150	175	200	250	300	350	400	450	500	550	600	1,000
H	408	458	508	608	708	808	908	1,008	1,108	1,208	1.308	2,108
D	371	396	421	471	521	571	621	671	721	771	821	1,221
K	695	775	855	1,010	1,165	1,325	1,480	1,640	1,795	1,950	2,110	3,365

The required clearance height: $H_F = H + 50mm$ (with 3.0kg/m fill weight)

Gliding applications | For travel lengths from 12m to max. 400m

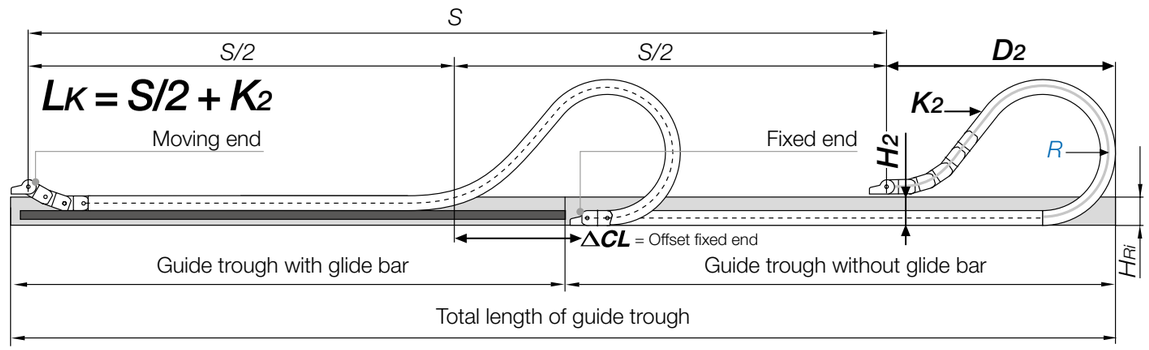

R	150	175	200	250	300	350	400	450	500	550	600	1,000
H_2	242	242	242	242	242	242	242	242	242	–	–	–
D_2^{+50}	550	675	800	1,000	1,200	1,450	1,600	1,850	2,100	–	–	–
K_2	890	1,000	1,330	1,665	2,000	2,330	2,660	3,000	3,440	–	–	–
ΔCL	189	289	389	539	689	889	989	1,189	1,389	–	–	–

Note: In case of travels between 10 and 12m we recommend an e-chain® with a longer unsupported length.

Available from stock
Upon request

KMA mounting brackets | Attachment from any side | Pivoting

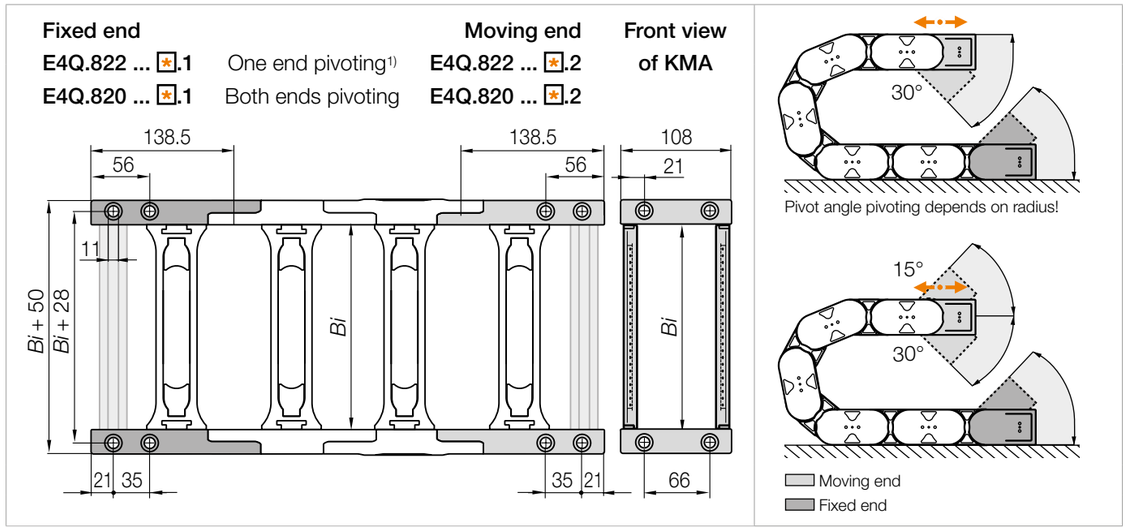

Width index	KMA full set		
	Part No. one end pivoting[1)]	Part No. both ends pivoting	*Bi* [mm]
100.	E4Q.822.100.✱.12.☐	E4Q.820.100.✱.12.☐	100
112.	E4Q.822.112.✱.12.☐	E4Q.820.112.✱.12.☐	112
125.	E4Q.822.125.✱.12.☐	E4Q.820.125.✱.12.☐	125
137.	E4Q.822.137.✱.12.☐	E4Q.820.137.✱.12.☐	137
150.	E4Q.822.150.✱.12.☐	E4Q.820.150.✱.12.☐	150
162.	E4Q.822.162.✱.12.☐	E4Q.820.162.✱.12.☐	162
175.	E4Q.822.175.✱.12.☐	E4Q.820.175.✱.12.☐	175
187.	E4Q.822.187.✱.12.☐	E4Q.820.187.✱.12.☐	187
200.	E4Q.822.200.✱.12.☐	E4Q.820.200.✱.12.☐	200
212.	E4Q.822.212.✱.12.☐	E4Q.820.212.✱.12.☐	212
225.	E4Q.822.225.✱.12.☐	E4Q.820.225.✱.12.☐	225
237.	E4Q.822.237.✱.12.☐	E4Q.820.237.✱.12.☐	237
250.	E4Q.822.250.✱.12.☐	E4Q.820.250.✱.12.☐	250
262.	E4Q.822.262.✱.12.☐	E4Q.820.262.✱.12.☐	262
275.	E4Q.822.275.✱.12.☐	E4Q.820.275.✱.12.☐	275
287.	E4Q.822.287.✱.12.☐	E4Q.820.287.✱.12.☐	287
300.	E4Q.822.300.✱.12.☐	E4Q.820.300.✱.12.☐	300
312.	E4Q.822.312.✱.12.☐	E4Q.820.312.✱.12.☐	312
325.	E4Q.822.325.✱.12.☐	E4Q.820.325.✱.12.☐	325

Width index	KMA full set		
	Part No. one end pivoting[1)]	Part No. both ends pivoting	*Bi* [mm]
337.	E4Q.822.337.✱.12.☐	E4Q.820.337.✱.12.☐	337
350.	E4Q.822.350.✱.12.☐	E4Q.820.350.✱.12.☐	350
362.	E4Q.822.362.✱.12.☐	E4Q.820.362.✱.12.☐	362
375.	E4Q.822.375.✱.12.☐	E4Q.820.375.✱.12.☐	375
387.	E4Q.822.387.✱.12.☐	E4Q.820.387.✱.12.☐	387
400.	E4Q.822.400.✱.12.☐	E4Q.820.400.✱.12.☐	400
412.	E4Q.822.412.✱.12.☐	E4Q.820.412.✱.12.☐	412
425.	E4Q.822.425.✱.12.☐	E4Q.820.425.✱.12.☐	425
437.	E4Q.822.437.✱.12.☐*	E4Q.820.437.✱.12.☐*	437
450.	E4Q.822.450.✱.12.☐	E4Q.820.450.✱.12.☐	450
462.	E4Q.822.462.✱.12.☐*	E4Q.820.462.✱.12.☐*	462
475.	E4Q.822.475.✱.12.☐*	E4Q.820.475.✱.12.☐*	475
487.	E4Q.822.487.✱.12.☐*	E4Q.820.487.✱.12.☐*	487
500.	E4Q.822.500.✱.12.☐	E4Q.820.500.✱.12.☐	500
512.	E4Q.822.512.✱.12.☐*	E4Q.820.512.✱.12.☐*	512
525.	E4Q.822.525.✱.12.☐*	E4Q.820.525.✱.12.☐*	525
537.	E4Q.822.537.✱.12.☐*	E4Q.820.537.✱.12.☐*	537
550.	E4Q.822.550.✱.12.☐*	E4Q.820.550.✱.12.☐*	550
600.	E4Q.822.600.✱.12.☐*	E4Q.820.600.✱.12.☐*	600

1) One end pivoting - standard for E4Q mounting brackets.

*Width available upon request, please consult igus® for delivery time.

(KMA = polymer metal mounting bracket)

Available from stock

Upon request

KMA mounting brackets | Attachment from any side | Pivoting | Locking

Note ✱: The e-chains® may end with either an inner or an outer side link. An outer side link should always be the first e-chain® link at the moving end. Please specify the index 1 (for odd) or 2 (for even) depending on an even or odd number of links required.

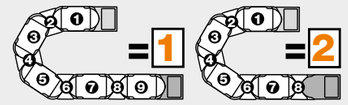

Order key

E4Q.822.150.2.12.C.A2

Series	Width index	Even number of links	Full set	C-profile option	Pre-fitted

Note: Possible orientations for KMA mounting brackets. For mounting brackets pre-fitted **without strain relief**, please add index **.A** . For types pre-fitted **with strain relief** please add index **.A1**, **.A2**, **.A3** or **.A4**.



For the C-profile option please add index **.C**.

Available from stock

Upon request

Interior separation | Increase cable service life

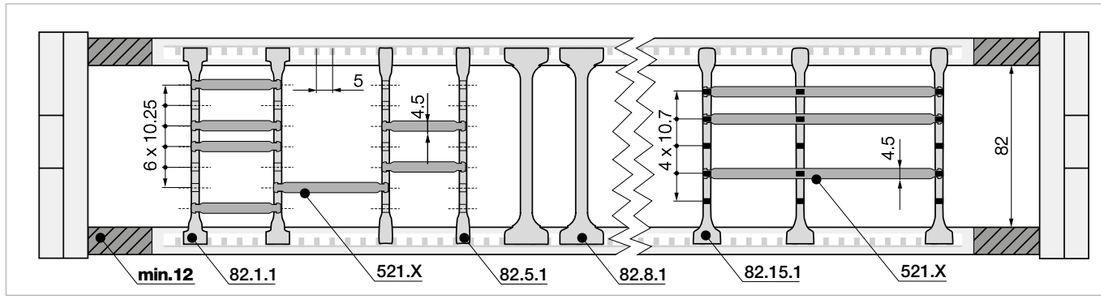

Note: Please be aware of the minimum lateral gap to the side links! **e-chain®: 12mm**
As standard separators are fitted every 2nd e-chain® link!



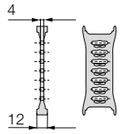

Part No.
Standard separator
unassembled **82.1**
assembled **82.1.1**

For all applications
Standard separator with a wide base for maximum holding force.



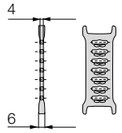

Part No.
Notch separator
unassembled **82.5**
assembled **85.5.1**

Locks securely in preset increments
Notch separator for exact positioning. Recommended for side-mounted applications.

Part No.
Locking separator
unassembled **82.8**
assembled **82.8.1**

Locking separator for increased holding force
Locking separators offer higher crossbar opening forces for high humidity and/or large hydraulic hoses.



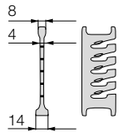

Part No.
Lean notch separator
unassembled **82.15**
assembled **82.15.1**

Lean notch separators[1)]
Quick fitting of shelves in several layers. Snaps securely into the crossbar in 5mm steps to be positioned securely.

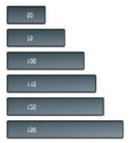

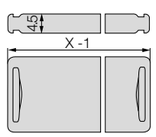

Part No.
Shelf
unassembled **520.X**
assembled **521.X**

Horizontal separation
Full-width shelf locks securely into separators at both ends, giving a fixed width. Can be used as full-width or modular shelving.

Width [mm]	Part No. unassembled	Part No. assembled
050	**520.050**	**521.050**
065	**520.065**	**521.065**
075	**520.075**	**521.075**
100	**520.100**	**521.100**
125	**520.125**	**521.125**
150	**520.150**	**521.150**
175	**520.175**	**521.175**
200	**520.200**	**521.200**
225	**520.225**	**521.225**
250	**520.250**	**521.250**
300	**520.300**	**521.300**
350	**520.350**	**521.350**
375	**520.375**	**521.375**
387	**520.387**	**521.387**
450	**520.450**	**521.450**



Lean notch separator for even faster filling: quickly insert several layers of cables into the e-chain® and reduce the installation time by up to 50%. Measured on a 4m long e-chain® fitted with 12 cables. **1) Note: Please combine a maximum of four lean notch separators with one shelf. Not suitable for side-mounted e-chains®!**

Universal interior separation | Modular shelving for complete flexibility

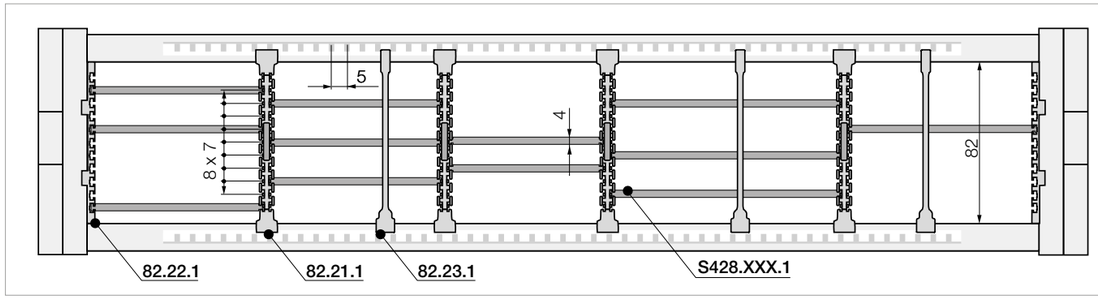

No lateral gap to side links necessary.
As standard separators are fitted every 2nd e-chain® link!



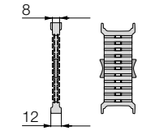

Part No.
Universal middle plate
unassembled **82.21**
assembled **82.21.1**

Universal middle plates
The shelves can be inserted from both sides. The shelves are locked in place by means of the integrated slider and automatically when the crossbar is fitted.



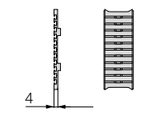

Part No.
Universal side plate
unassembled **82.22**
assembled **82.22.1**

Universal side plates
Allow modular shelving right up to the side links. Shelves can be inserted from both sides.

Part No.
Separator
unassembled **82.23**
assembled **82.23.1**

Separators for universal interior separation
For additional vertical partitioning of the system. When using the separator, the shelves can only be removed in one direction.



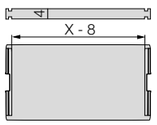

Part No.
Partial shelf[1)]
unassembled **S428.XXX**
assembled **S428.XXX.1**

Separators[1)] for universal interior separation
Shelves of various widths can be arranged in steps of 7mm

Width [mm]	Part No. unassembled	Part No. assembled
018	**S428.018**	**S428.018.1**
023*	**S428.023**	**S428.023.1**
025	**S428.025**	**S428.025.1**
028*	**S428.028**	**S428.028.1**
033	**S428.033**	**S428.033.1**
044	**S428.044**	**S428.044.1**
050	**S428.050**	**S428.050.1**
058	**S428.058**	**S428.058.1**
062	**S428.062**	**S428.062.1**
068	**S428.068**	**S428.068.1**
070	**S428.070**	**S428.070.1**
075	**S428.075**	**S428.075.1**
083	**S428.083**	**S428.083.1**
087	**S428.087**	**S428.087.1**
100	**S428.100**	**S428.100.1**
108	**S428.108**	**S428.108.1**
125	**S428.125**	**S428.125.1**
150	**S428.150**	**S428.150.1**
175	**S428.175**	**S428.175.1**
200	**S428.200**	**S428.200.1**
208*	**S428.208**	**S428.208.1**

* Available upon request, please consult igus® for delivery time.

1) Note: The available width of the shelf S428.XXX deviates by 8mm from the width stated in the Part No. With the shelf S428.050, e.g. the space between the separators is 42mm.

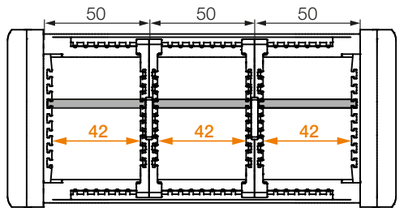



Attachment from any side with KMA mounting brackets

40% faster filling[1]: crossbar designed for tool-free opening and closing

Proven E4Q design:

~ 10% stronger than the previous series

Slimmer side links: ~ 10-15% more cost-effective than the E4Q

Stronger: E4Q.64L ~ 10 % stronger than 14040 series

Light design: ~ 15% lighter than E4Q with the same width

1) Compared to E4.1

Large inner height, lightweight, assembly-friendly e-chains® - E4Q.L

The best combination of strength and low weight. Highly dynamic, save up to 40% installation time, can be opened by hand.
Based on the successful E4Q, there is now an L variant with an inner height of 64mm. Benefit from the advantages of the E4Q. The new E4Q.64L shines in applications with medium loads (such as machine tools) and features high strength, long service life and low weight. The E4Q's proven quick-opening crossbar allows intuitive, tool-free opening and closing. The complete range of widths, from an inner width of 100mm to 500mm, is available from stock.

Benefits

- Tool-free opening and closing
- Sustainability - 10% less material means 10% less energy consumption during production
- Short cross-bar pickup for even easier filling of the e-chain®
- Optimised interior geometry for longer cable service life
- Integrated grid structure on crossbars for fixed interior separation with narrower separators
- Inner/outer link principle for straight run
- Undercut design ensures the best hold as well as high lateral and torsion strength

Typical application areas

- Washing systems
- Machine tools
- Woodworking
- Passenger boarding bridges

Selection table

Part No.	Inner height *hi* [mm]	Outer height *ha* [mm]	Inner width *Bi* [mm]	Outer width *Ba* [mm]	Bend radius *R* [mm]	Unsupported length ≤ [m]	Page
E4Q.L - e-chains® with crossbars every link							
The all-rounder, for heavy-duty applications.							
E4Q.64L	64	90	100 - 500	126 - 526	135 - 500	4.50	**204**
H4Q.L - e-chains® with crossbars every 2nd link							
The cost-effective, easy-to-install alternative for almost any application.							
H4Q.64L	64	90	100 - 500	126 - 526	135 - 500	4.50	**204**

Technical data

General properties	
Speed gliding / acceleration gliding	≤ 10m/s / ≤ 50m/s²
Speed FL_G/acceleration FL_G	≤ 20m/s / ≤ 200m/s²
Speed FL_B/acceleration FL_B	≤ 3m/s / ≤ 6m/s²
igumid® G LW material - permitted temperature °C	-40°C/+120°C
Flammability class, igumid® G LW	VDE 0304 IIC UL94-HB

Installation types, maximum travel lengths

Series	Unsupported	Gliding	Vertical hanging	Vertical standing	Side mounted, unsupported
E4Q.64L / H4Q.64L	≤ 9.0m	upon request	≤ 80m	≤ 6.0m	upon request

E4QL
LARGE
LIGHTWEIGHT
LEAN DESIGN
LONG SERVICE LIFE
LOW-COST
LIGHTNING FAST OPENING

Product range

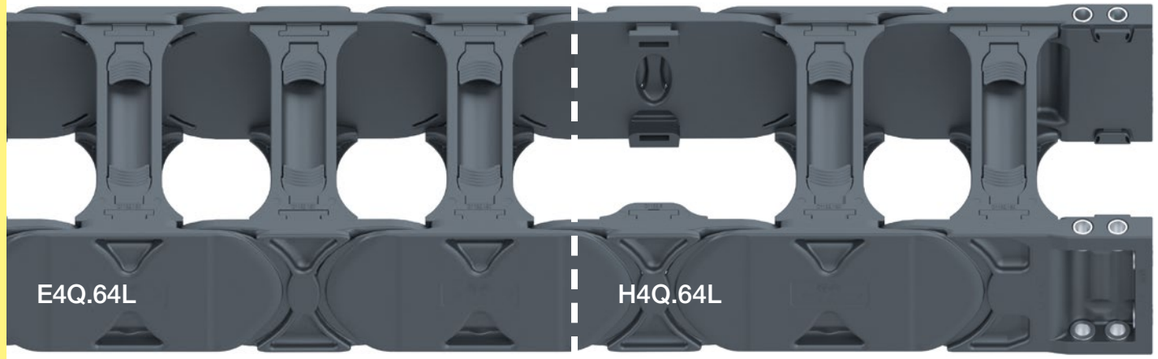

Part No. e-chains® with crossbars every link	Part No. e-chains® with crossbars every 2nd link	*Bi* [mm]	*Ba* [mm]	E4Q.64L [kg/m]	H4Q.64L [kg/m]
E4Q.64L.100.□.0	H4Q.64L.100.□.0	100	126	≈ 2.92	≈ 2.61
E4Q.64L.112.□.0	H4Q.64L.112.□.0	112.5	138.5	≈ 2.97	≈ 2.63
E4Q.64L.125.□.0	H4Q.64L.125.□.0	125	151	≈ 3.00	≈ 2.65
E4Q.64L.137.□.0	H4Q.64L.137.□.0	137.5	163.5	≈ 3.05	≈ 2.67
E4Q.64L.150.□.0	H4Q.64L.150.□.0	150	176	≈ 3.13	≈ 2.71
E4Q.64L.162.□.0	H4Q.64L.162.□.0	162.5	188.5	≈ 3.18	≈ 2.74
E4Q.64L.175.□.0	H4Q.64L.175.□.0	175	201	≈ 3.21	≈ 2.75
E4Q.64L.187.□.0	H4Q.64L.187.□.0	187.5	213.5	≈ 3.25	≈ 2.77
E4Q.64L.200.□.0	H4Q.64L.200.□.0	200	226	≈ 3.36	≈ 2.82
E4Q.64L.212.□.0	H4Q.64L.212.□.0	212.5	238.5	≈ 3.35	≈ 2.82
E4Q.64L.225.□.0	H4Q.64L.225.□.0	225	251	≈ 3.42	≈ 2.86
E4Q.64L.237.□.0	H4Q.64L.237.□.0	237.5	263.5	≈ 3.45	≈ 2.87
E4Q.64L.250.□.0	H4Q.64L.250.□.0	250	276	≈ 3.50	≈ 2.90
E4Q.64L.262.□.0	H4Q.64L.262.□.0	262.5	288.5	≈ 3.53	≈ 2.91
E4Q.64L.275.□.0	H4Q.64L.275.□.0	275	301	≈ 3.60	≈ 2.95
E4Q.64L.287.□.0	H4Q.64L.287.□.0	287.5	313.5	≈ 3.63	≈ 2.96
E4Q.64L.300.□.0	H4Q.64L.300.□.0	300	326	≈ 3.70	≈ 3.00
E4Q.64L.312.□.0	H4Q.64L.312.□.0	312.5	338.5	≈ 3.75	≈ 3.02
E4Q.64L.325.□.0	H4Q.64L.325.□.0	325	351	≈ 3.80	≈ 3.05
E4Q.64L.337.□.0	H4Q.64L.337.□.0	337.5	363.5	≈ 3.85	≈ 3.07
E4Q.64L.350.□.0	H4Q.64L.350.□.0	350	376	≈ 3.89	≈ 3.09
E4Q.64L.362.□.0	H4Q.64L.362.□.0	362.5	388.5	≈ 3.94	≈ 3.12
E4Q.64L.375.□.0	H4Q.64L.375.□.0	375	401	≈ 3.99	≈ 3.14
E4Q.64L.387.□.0	H4Q.64L.387.□.0	387.5	413.5	≈ 4.05	≈ 3.17
E4Q.64L.400.□.0	H4Q.64L.400.□.0	400	426	≈ 4.09	≈ 3.19
E4Q.64L.412.□.0	H4Q.64L.412.□.0	412.5	438.5	≈ 4.14	≈ 3.22
E4Q.64L.425.□.0	H4Q.64L.425.□.0	425	451	≈ 4.20	≈ 3.25
E4Q.64L.437.□.0	H4Q.64L.437.□.0	437.5	463.5	≈ 4.24	≈ 3.27
E4Q.64L.450.□.0	H4Q.64L.450.□.0	450	476	≈ 4.29	≈ 3.29
E4Q.64L.462.□.0	H4Q.64L.462.□.0	462.5	488.5	≈ 4.34	≈ 3.32
E4Q.64L.475.□.0	H4Q.64L.475.□.0	475	501	≈ 4.39	≈ 3.34
E4Q.64L.487.□.0	H4Q.64L.487.□.0	487.5	513.5	≈ 4.44	≈ 3.37
E4Q.64L.500.□.0	H4Q.64L.500.□.0	500	526	≈ 4.49	≈ 3.39

Available bend radii *R* [mm] | 135 | 150 | 175 | 200 | 240 | 250 | 300 | 350 | 400 | 450 | 500 |

Order key

E4Q.64L.150.150.0

Series / Type	Inner height	Width index	Bend radius	Colour index

Note:
Complete Part No. with the required radius □. Example:
E4Q.64L.150.150.0 = crossbars removable along the inner and outer radius
H4Q.64L.150.150.0 = crossbars removable along the inner and outer radius
Order index for colour options ▶ **www.igus.eu/info-colours**

Available from stock
Upon request

Unsupported applications | Short travels

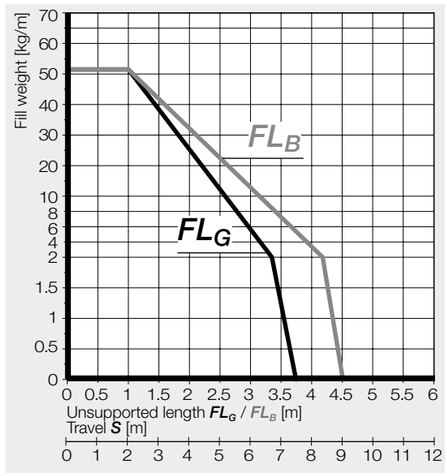

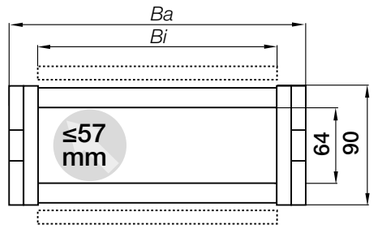

Inner height [mm]	64
Pitch [mm]	100
Links/m [pc.]	10
corresponds to [mm]	1,000
e-chain® length	$L_K = S/2 + K$

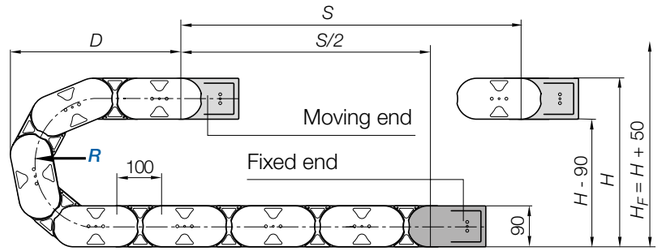

R	135	150	175	200	240	250	300	350	400	500
H $^{-0}_{+25}$	358	388	438	488	568	588	688	788	888	988
D	329	344	369	394	434	444	494	544	594	644
K	625	675	750	830	955	990	1145	1,300	1460	1615

The required clearance height: $H_F = H + 50$mm (with 2.0kg/m fill weight)

Note: If a gliding application is required for a long travel, please consult igus®.

Available from stock
Upon request

KMA mounting brackets | Attachment from any side | Pivoting

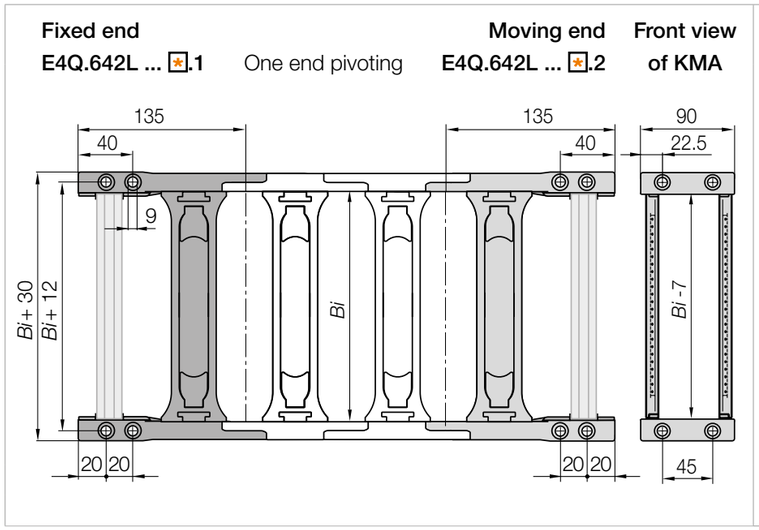

Width index	KMA full set	
	Part No. one end pivoting	*Bi* [mm]
100.	E4Q.642L.100.✱.12.□	100
112.	E4Q.642L.112.✱.12.□	112.5
125.	E4Q.642L.125.✱.12.□	125
137.	E4Q.642L.137.✱.12.□	137.5
150.	E4Q.642L.150.✱.12.□	150
162.	E4Q.642L.162.✱.12.□	162.5
175.	E4Q.642L.175.✱.12.□	175
187.	E4Q.642L.187.✱.12.□	187.5
200.	E4Q.642L.200.✱.12.□	200
212.	E4Q.642L.212.✱.12.□	212.5
225.	E4Q.642L.225.✱.12.□	225
237.	E4Q.642L.237.✱.12.□	237.5
250.	E4Q.642L.250.✱.12.□	250
262.	E4Q.642L.262.✱.12.□	262.5
275.	E4Q.642L.275.✱.12.□	275
287.	E4Q.642L.287.✱.12.□	287.5
300.	E4Q.642L.300.✱.12.□	300

Width index	KMA full set	
	Part No. one end pivoting	*Bi* [mm]
312.	E4Q.642L.312.✱.12.□	312.5
325.	E4Q.642L.325.✱.12.□	325
337.	E4Q.642L.337.✱.12.□	337.5
350.	E4Q.642L.350.✱.12.□	350
362.	E4Q.642L.362.✱.12.□	362.5
375.	E4Q.642L.375.✱.12.□	375
387.	E4Q.642L.387.✱.12.□	387.5
400.	E4Q.642L.400.✱.12.□	400
412.	E4Q.642L.412.✱.12.□	412.5
425.	E4Q.642L.425.✱.12.□	425
437.	E4Q.642L.437.✱.12.□	437.5
450.	E4Q.642L.450.✱.12.□	450
462.	E4Q.642L.462.✱.12.□	462.5
475.	E4Q.642L.475.✱.12.□	475
487.	E4Q.642L.487.✱.12.□	487.5
500.	E4Q.642L.500.✱.12.□	500

(KMA = polymer metal mounting bracket)

Available from stock
Upon request

E4Q.L | Series E4Q.64L / H4Q.64L

E4Q.64L
H4Q.64L

KMA mounting brackets | Attachment from any side | Pivoting

Note ✱: The e-chains® may end with either an inner or an outer side link. An outer side link should always be the first e-chain® link at the moving end. Please specify the index 1 (for odd) or 2 (for even) depending on an even or odd number of links required.

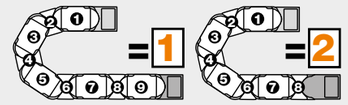

Order key

E4Q.642L.150.2.12.C.A2

Series	Width index	Even number of links	Full set	C-profile option	Pre-fitted

Note: Possible orientations for KMA mounting brackets. For mounting brackets pre-fitted **without strain relief**, please add index **.A**. For types pre-fitted **with strain relief** please add index **.A1**, **.A2**, **.A3** or **.A4**.



For the C-profile option please add index **.C**.

Available from stock
Upon request

Interior separation | Increase cable service life

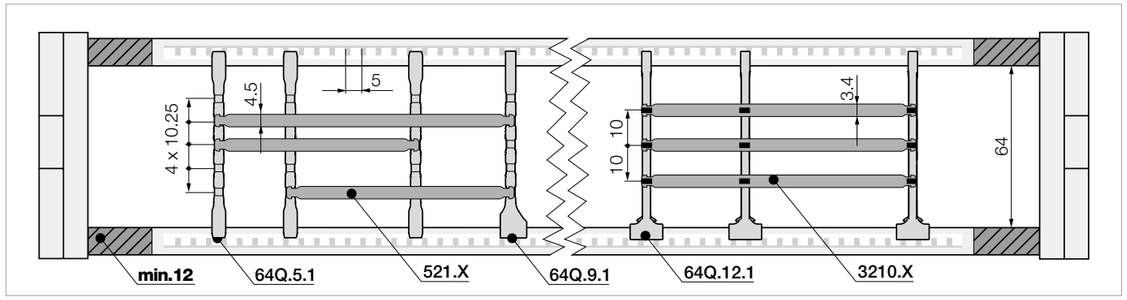

Note: Please be aware of the minimum lateral gap to the side links! **e-chain®: 12mm**
As standard separators are fitted every 2nd e-chain® link!


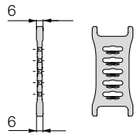

Part No.	
Notch separator	
unassembled	**64Q.5**
assembled	**64Q.5.1**

Locks securely in preset increments

Notch separator for exact positioning.
Recommended for side-mounted applications.


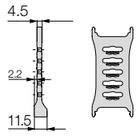

Part No.	
Separator, asymmetrical	
unassembled	**64Q.9**
assembled	**64Q.9.1**

For side-mounted applications

Asymmetrical separator, for defined gap distance. No additional spacers required.


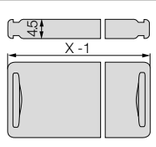

Part No.	
Shelf	
unassembled	**3200.X**
assembled	**3210.X**

Horizontal separation

Full-width shelf locks securely into separators at both ends, giving a fixed width. Can be used as full-width or modular shelving.

Width [mm]	Part No. unassembled	Part No. assembled
050	**520.050**	**521.050**
065	**520.065**	**521.065**
075	**520.075**	**521.075**
100	**520.100**	**521.100**
125	**520.125**	**521.125**
150	**520.150**	**521.150**
175	**520.175**	**521.175**
200	**520.200**	**521.200**
225	**520.225**	**521.225**
250	**520.250**	**521.250**
300	**520.300**	**521.300**
350	**520.350**	**521.350**
375	**520.375**	**521.375**
387	**520.387**	**521.387**
450	**520.450**	**521.450**


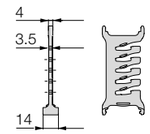

Part No.	
Lean separator	
unassembled	**64Q.12**
assembled	**64Q.12.1**

Lean separators[1)]

Quick fitting of shelves in several layers. Enables extremely fast replacement of individual cables in very full e-chains®. Only suitable for e-chains®.

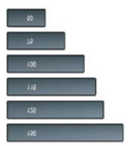
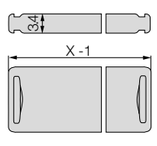

Part No.	
Shelf	
unassembled	**3200.X**
assembled	**3210.X**

Horizontal separation

Full-width shelf locks securely into separators at both ends, giving a fixed width. Can be used as full-width or modular shelving.

Width [mm]	Part No. unassembled	Part No. assembled
050	**3200.050**	**3210.050**
075	**3200.075**	**3210.075**
100	**3200.100**	**3210.100**
115	**3200.115**	**3210.115**
125	**3200.125**	**3210.125**
150	**3200.150**	**3210.150**
175	**3200.175**	**3210.175**
200	**3200.200**	**3210.200**
225	**3200.225**	**3210.225**
250	**3200.250**	**3210.250**

E4Q.L | Series E4Q.64L / H4Q.64L

E4Q.64L
H4Q.64L

Universal interior separation | Modular shelving for complete flexibility

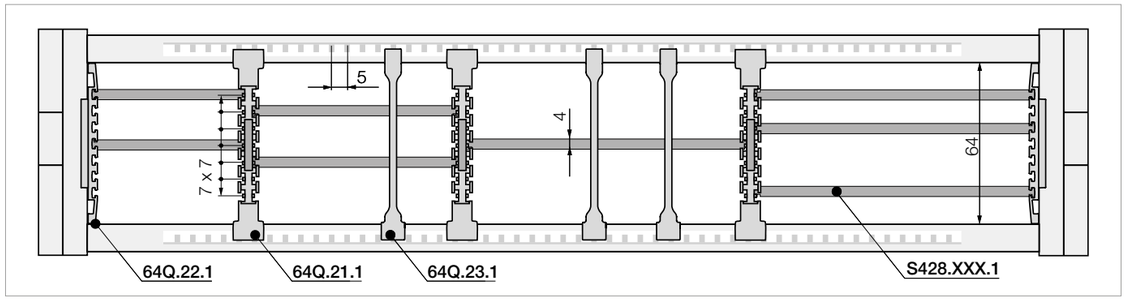

No lateral gap to side links necessary.
As standard separators are fitted every 2nd e-chain® link!


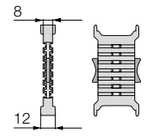

Part No.	
Universal middle plate	
unassembled	**64Q.21**
assembled	**64Q.21.1**

Universal middle plates

The shelves can be inserted from both sides. The shelves are locked in place by means of the integrated slider and automatically when the crossbar is fitted.


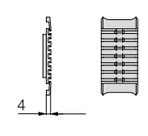

Part No.	
Universal side plate	
unassembled	**64Q.22**
assembled	**64Q.22.1**

Universal side plates

Allow modular shelving right up to the side links. Shelves can be inserted from both sides.


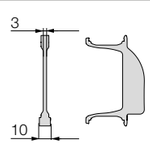

Part No.	
Separator	
unassembled	**64Q.23**
assembled	**64Q.23.1**

Separators for universal interior separation

For additional vertical partitioning of the system. When using the separator, the shelves can only be removed in one direction.


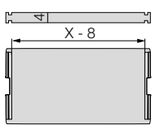

Part No.	
Partial shelf[1)]	
unassembled	**S428.XXX**
assembled	**S428.XXX.1**

Separators[1)] for universal interior separation

Shelves of various widths can be arranged in steps of 7mm

Width [mm]	Part No. unassembled	Part No. assembled
018	**S428.018**	**S428.018.1**
023*	**S428.023**	**S428.023.1**
025	**S428.025**	**S428.025.1**
028*	**S428.028**	**S428.028.1**
033	**S428.033**	**S428.033.1**
044	**S428.044**	**S428.044.1**
050	**S428.050**	**S428.050.1**
058	**S428.058**	**S428.058.1**
062	**S428.062**	**S428.062.1**
068	**S428.068**	**S428.068.1**
070	**S428.070**	**S428.070.1**
075	**S428.075**	**S428.075.1**
083	**S428.083**	**S428.083.1**
087	**S428.087**	**S428.087.1**
100	**S428.100**	**S428.100.1**
108	**S428.108**	**S428.108.1**
125	**S428.125**	**S428.125.1**
150	**S428.150**	**S428.150.1**
175	**S428.175**	**S428.175.1**
200	**S428.200**	**S428.200.1**
208*	**S428.208**	**S428.208.1**

* Available upon request, please consult igus® for delivery time.

1) Note: The available width of the shelf S428.XXX deviates by 8mm from the width stated in the Part No. With the shelf S428.050, e.g. the space between the separators is 42mm.

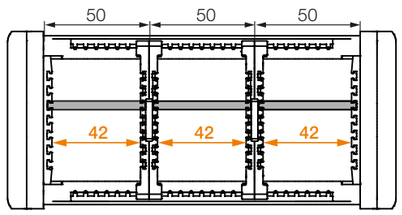



Large modular system for almost any application - E4.1

The E4.1 system combines all the advantages of its three predecessors. The E4.1 series is stronger with the same or even smaller dimensions than previous versions. Almost all accessories and mounting dimensions are identical. You can increase the service life of your application with the igus® system E4.1 whilst reducing cost.

Benefits

- Undercut design for high lateral stability
- High push/pull strength for long travels and unsupported lengths
- Well suited for side-mounted applications
- Noise-reducing brake and optional noise dampers
- Inner and outer links for quick assembly, with or without pretension

Typical application areas

- Cranes/indoor cranes
- Composting plants
- Wastewater and sewage treatment plants
- Machine tools
- General mechanical engineering
- Material handling
- Cooling technology
- Construction machinery
- Wood working
- Robots and material handling

Selection table

Part No.	Inner height *hi* [mm]	Outer height *ha* [mm]	Inner width *Bi* [mm]	Outer width *Ba* [mm]	Bend radius *R* [mm]	Unsupported length ≤ [m]	Page
E4.1 - e-chains® with crossbars every link. The all-rounder, for heavy-duty applications.							
E4.21	21	28	30 - 140	44 - 154	038 - 200	2.50	**212**
E4.28	28	42	40 - 300	60 - 320	055 - 250	2.50	**218**
E4.32	32	54	50 - 400	73 - 423	063 - 300	3.30	**224**
E4.42	42	64	50 - 400	76 - 426	075 - 350	4.00	**230**
E4.56	56	84	50 - 600	84 - 634	100 - 500	5.00	**236**
E4.80	80	108	50 - 600	100 - 650	150 - 1.000	6.20	**242**
E4.112	112	140	50 - 600	102 - 652	200 - 1,000	6.50	**248**
E4.162	162	195	200 - 600	256 - 656	250 - 1,000	6.75	**254**
800	200	236	200 - 600	260 - 660	325 - 1,000	8.00	**258**
840	204	236	100 - 563	160 - 623	325 - 1,000	8.00	**262**
E4.350	350	450	400 - 800	540 - 940	500 - 1,000	6.20	**266**
H4.1 - e-chains® with crossbars every 2nd link. The cost-effective alternative for almost any application.							
H4.32	32	54	50 - 400	73 - 423	063 - 300	3.30	**224**
H4.42	42	64	50 - 400	76 - 426	075 - 350	4.00	**230**
H4.56	56	84	50 - 600	84 - 634	100 - 500	5.00	**236**
H4.80	80	108	50 - 600	100 - 650	150 - 1.000	6.20	**242**
R4.1 - closed e-tubes. Lightweight, excellent cable protection.							
R4.28	28	42	50 - 300	70 - 320	075 - 250	2.50	**218**
R4.32	32	54	50 - 300	73 - 323	125 - 300	3.30	**224**
R4.42	42	64	50 - 300	76 - 326	125 - 350	4.00	**230**
R4.56	56	84	75 - 462	109 - 497	100 - 500	5.00	**236**
R4.80	80	108	100 - 462	150 - 513	200 - 1,000	6.20	**242**
R4.112	108	140	200 - 500	252 - 552	250 - 1,000	6.50	**248**

Technical data

General properties	
Speed gliding / acceleration gliding	≤ 10m/s / ≤ 50m/s²
Speed FL_G/acceleration FL_G	≤ 20m/s / ≤ 200m/s²
Speed FL_B/acceleration FL_B	≤ 3m/s / ≤ 6m/s²
igumid® G LW material - permitted temperature °C	-40°C/+120°C
Flammability class, igumid® G LW	VDE 0304 IIC UL94-HB

Installation types, maximum travel lengths

Series	Unsupported	Gliding[1)]	Vertical hanging	Vertical standing	Side mounted, unsupported	Rotary	Zig-zag
E4.21	≤ 5.0m	≤ 120m	≤ 40	≤ 3.0m	≤ 1.0	with rework	upon request
E4.28	≤ 5.0m	≤ 200m	≤ 80	≤ 5.0m	≤ 1.2	with rework	upon request
E4.32	≤ 6.6m	≤ 200m	≤ 80	≤ 5.0m	≤ 1.5	with rework	upon request
E4.42	≤ 8.0m	≤ 300m	≤ 100	≤ 6.0m	≤ 2.0	with rework	upon request
E4.56	≤ 10.0m	≤ 400m	≤ 100	≤ 6.0m	≤ 2.5	with rework	upon request
E4.80	≤ 12.4m	≤ 400m	≤ 120	≤ 6.0m	≤ 3.0	with rework	upon request
E4.112	≤ 13.0m	≤ 450m	≤ 120	≤ 6.0m	≤ 3.0	with rework	upon request
E4.162	≤ 13.5m	≤ 450m	≤ 120	≤ 6.0m	upon request	with rework	upon request
800/840	≤ 16.0m	≤ 450m	≤ 120	≤ 6.0m	≤ 6.0	with rework	upon request
E4.350	≤ 13.0m	upon request	upon request	upon request	with rework	with rework	upon request

Product range

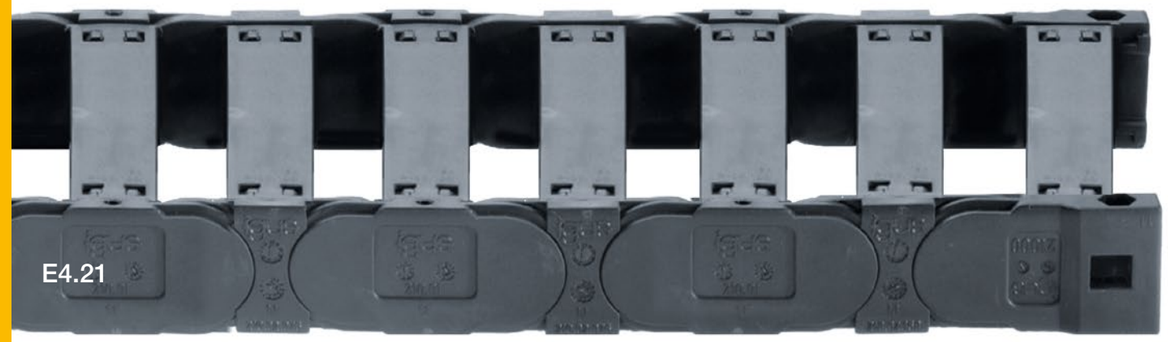

Part No. e-chains® with crossbars every link	*Bi* [mm]	*Ba* [mm]	E4.21 [kg/m]
E4.21.030.□.0	30	44	≈ 0.60
E4.21.040.□.0	40	54	≈ 0.64
E4.21.050.□.0	50	64	≈ 0.67
E4.21.060.□.0	60	74	≈ 0.71
E4.21.070.□.0	70	84	≈ 0.74
E4.21.080.□.0	80	94	≈ 0.78

Part No. e-chains® with crossbars every link	*Bi* [mm]	*Ba* [mm]	E4.21 [kg/m]
E4.21.090.□.0	90	104	≈ 0.82
E4.21.100.□.0	100	114	≈ 0.85
E4.21.110.□.0	110	124	≈ 0.89
E4.21.120.□.0	120	134	≈ 0.92
E4.21.140.□.0	140	154	≈ 0.99

Available bend radii *R* [mm] | 038 | 048 | 063 | 075 | 100 | 150 | 200 |

Order key

E4.21.030.150.0

Series / Type | Inner height | Width index | Bend radius | Colour index

Order example:
Complete Part No. with the required radius □. Example:
E4.21.030.150.0 = crossbars removable along the inner and outer radius
Order index for colour options ▶ **www.igus.eu/info-colours**

Available from stock
Upon request

Unsupported applications | Short travels

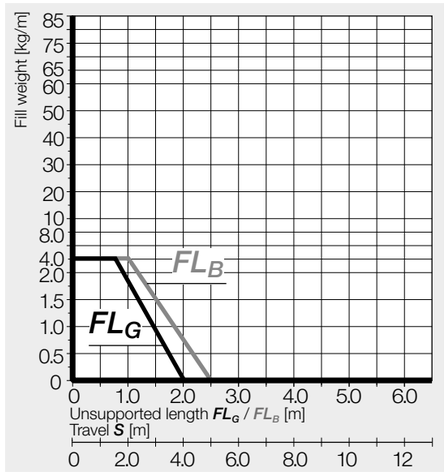

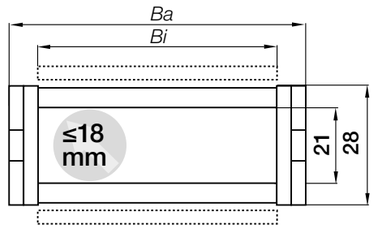

Inner height [mm]	21
Pitch [mm]	30.5
Links/m [pc.]	33
corresponds to [mm]	1,007
e-chain® length	$L_K = S/2 + K$

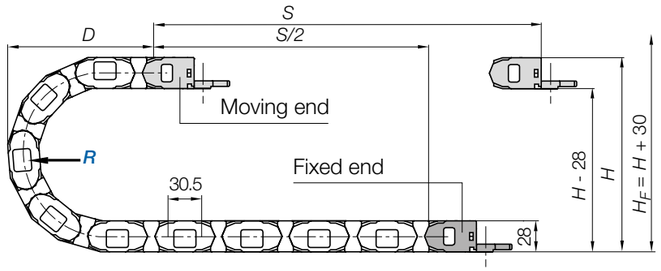

R	038	048	063	075	100	150	200
H	104	124	154	178	228	328	428
D	098	108	123	135	160	210	260
K	185	215	260	300	380	535	690

The required clearance height: $H_F = H + 30$mm (with 1.5kg/m fill weight)

Gliding applications | For travel lengths from 10m to max. 120m

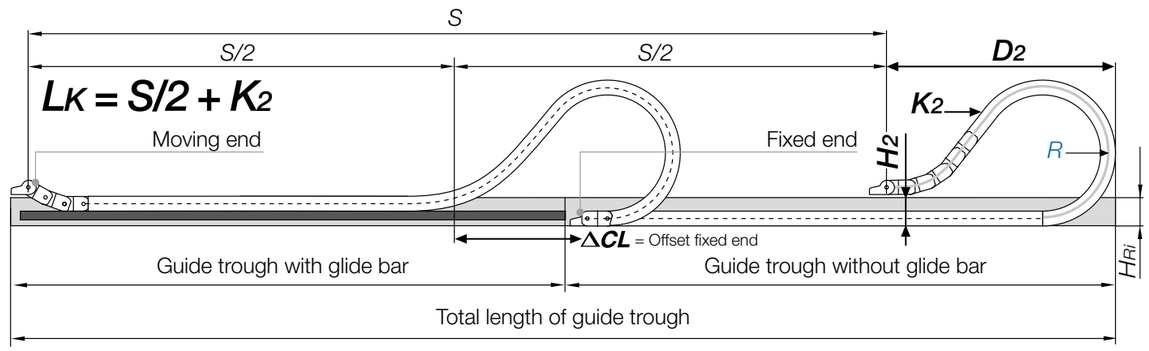

R	038	048	063	075	100	150	200
H_2	076	096	126	152	135	135	135
D_2^{+25}	085	095	110	120	430	580	730
K_2	185	215	260	300	640.5	945.5	1,250.5
ΔCL	–	–	–	–	270	370	470

Note: In case of travels between 4 and 10m we recommend an e-chain® with a longer unsupported length.

Available from stock
Upon request

KMA mounting brackets | Pivoting

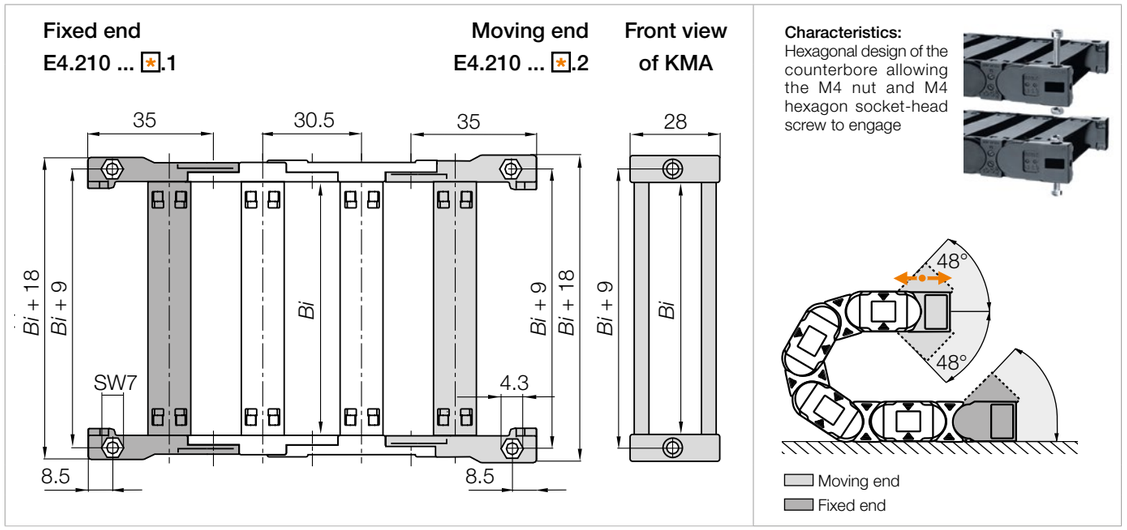

Width index	KMA full set Part No. pivoting	Bi [mm]
030.	E4.210.030.✱.12.☐	30
040.	E4.210.040.✱.12.☐	40
050.	E4.210.050.✱.12.☐	50
060.	E4.210.060.✱.12.☐	60
070.	E4.210.070.✱.12.☐	70
080.	E4.210.080.✱.12.☐	80

Width index	KMA full set Part No. pivoting	Bi [mm]
090.	E4.210.090.✱.12.☐	90
100.	E4.210.100.✱.12.☐	100
110.	E4.210.110.✱.12.☐	110
120.	E4.210.120.✱.12.☐	120
140.	E4.210.140.✱.12.☐	140

(KMA = polymer metal mounting bracket)

Available from stock
Upon request

E4.1 | Series E4.21 E4.21

KMA mounting brackets | Pivoting

Note ✱: The e-chains® may end with either an inner or an outer side link. An outer side link should always be the first e-chain® link at the moving end. Please specify the index 1 (for odd) or 2 (for even) depending on an even or odd number of links required.

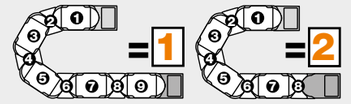

Order key

E4.210.030.2.12.A

Series	Width index	Even number of links	Full set	Pre-fitted
				.A

Note: The bracket orientations are set automatically when using this igus® KMA mounting bracket. To receive a KMA mounting bracket pre-fitted please add index **.A**.

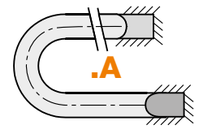

Available from stock
Upon request

Interior separation | Increase cable service life

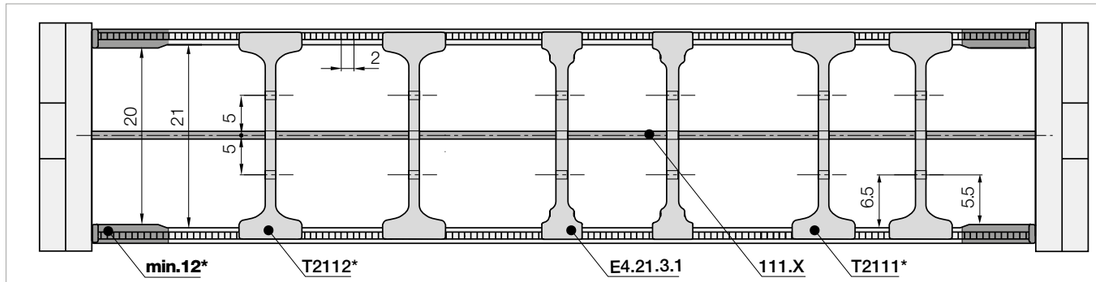

Note T2102 and T2101*: Please be aware of the minimum lateral gap to the side links! **e-chain® = 12mm**
As standard separators are fitted every 2nd e-chain® link!



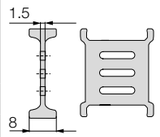

Part No.	
Slotted separator*	
unassembled	**T2102**
assembled	**T2112**

Slotted separator[1)]

For a vertical subdivision. The slot allows basic vertical/horizontal shelving arrangements.



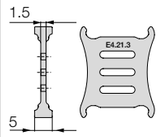

Part No.	
Separator, narrow	
unassembled	**E4.21.3**
assembled	**E4.21.3.1**

For a large number of thin cables

Separator with a narrow base for a large number of thin cables side by side. Saves space.



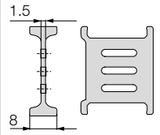

Part No.	
Notch separator*	
unassembled	**T2101**
assembled	**T2111**

Slotted notch separator[1)]

Can be locked/fixed securely on the crossbars of the e-chain®. The separator cannot slide sideways during operation.



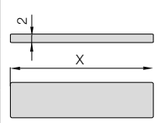

Part No.	
Full-width shelf	
unassembled	**110.X**
assembled	**111.X**

Full-width shelf

This option is for applications with many small cables with similar diameters. For full-width separation.

Note: 1) NOT suitable for ***Bi*** 030.

Width [mm]	Part No. unassembled	Part No. assembled
030	**110.30**	**111.30**
040	**110.40**	**111.40**
050	**110.50**	**111.50**
060	**110.60**	**111.60**
070	**110.70**	**111.70**
080	**110.80**	**111.80**
090	**110.90**	**111.90**
100	**110.100**	**111.100**
110	**110.110**	**111.110**
120	**110.120**	**111.120**

Available from stock
Upon request

Interior separation | To allow faster filling

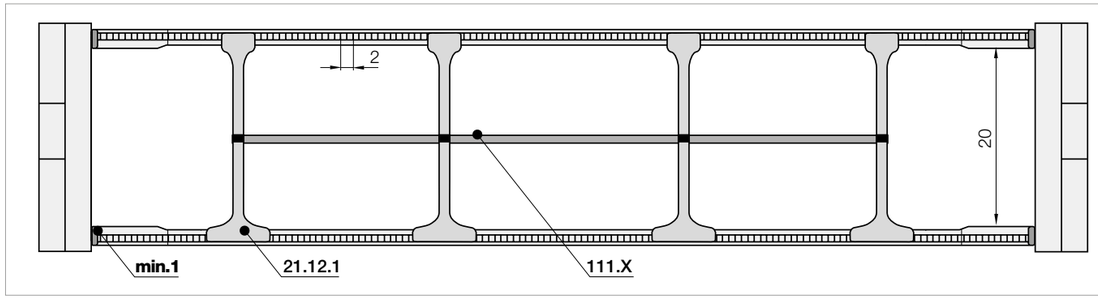

Note: Please be aware of the minimum lateral gap to the side links! **e-chain®: 1mm**
As standard separators are fitted every 2nd e-chain® link!



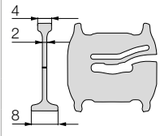

Part No.	
Lean separator	
unassembled	**21.12***
assembled	**21.12.1***

Lean separators[1)]

Quick fitting of shelves in several layers. Enables extremely fast replacement of individual cables in very full e-chains®. Only suitable for e-chains®.



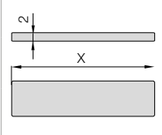

Part No.	
Full-width shelf	
unassembled	**110.X**
assembled	**111.X**

Full-width shelf

This option is for applications with many small cables with similar diameters. For full-width separation.

* Available upon request, please consult igus® for delivery time.

Width [mm]	Part No. unassembled	Part No. assembled
030	**110.30**	**111.30**
040	**110.40**	**111.40**
050	**110.50**	**111.50**
060	**110.60**	**111.60**
070	**110.70**	**111.70**
080	**110.80**	**111.80**
090	**110.90**	**111.90**
100	**110.100**	**111.100**
110	**110.110**	**111.110**
120	**110.120**	**111.120**



Lean separator for even faster filling: quickly insert several layers of cables into the e-chain® and reduce the installation time by up to 50%. Measured on a 4m long e-chain® fitted with 12 cables. **1) Note: Please combine a maximum of four lean separators with one shelf. Not suitable for side-mounted e-chains®!**

Available from stock
Upon request

Product range

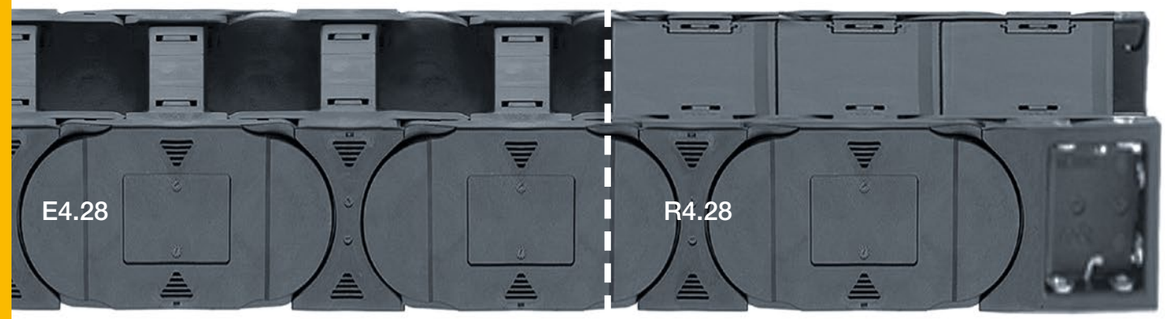

Part No. e-chains® with crossbars every link	Part No. e-tubes closed	*Bi* [mm]	*Ba* [mm]	E4.28 [kg/m]	R4.28 [kg/m]
E4.28.040.□□.0	–	40	60	≈ 1.06	–
E4.28.050.□□.0	R4.28.050.□□.0	50	70	≈ 1.11	≈ 2.20
E4.28.052.□□.0	–	52	72	≈ 1.13	–
E4.28.062.□□.0	–	62	82	≈ 1.17	–
E4.28.070.□□.0	–	70	90	≈ 1.20	–
E4.28.075.□□.0	R4.28.075.□□.0	75	95	≈ 1.23	≈ 2.32
E4.28.087.□□.0	–	87	107	≈ 1.28	–
E4.28.100.□□.0	R4.28.100.□□.0	100	120	≈ 1.37	≈ 2.54
E4.28.125.□□.0	R4.28.125.□□.0	125	145	≈1.51	≈ 2.78
E4.28.150.□□.0	R4.28.150.□□.0	150	170	≈ 1.61	≈ 3.02
E4.28.175.□□.0	R4.28.175.□□.0	175	195	≈ 1.71	≈ 3.26
E4.28.200.□□.0	R4.28.200.□□.0	200	220	≈ 1.84	≈ 3.50
E4.28.225.□□.0	R4.28.225.□□.0	225	245	≈ 1.99	≈ 3.82
E4.28.250.□□.0	R4.28.250.□□.0	250	270	≈ 2.14	≈ 3.98
E4.28.275.□□.0	–	275	295	≈ 2.27	–
E4.28.300.□□.0	R4.28.300.□□.0	300	320	≈ 2.39	≈ 4.46

Available bend radii *R* [mm] | 055*| 063*| 075 | 100 | 125 | 150 | 175 | 200 | 250 |

*Radius not available for e-tubes.

Order key

E4.28.100.150.0

Series / Type	Inner height	Width index	Bend radius	Colour index

Order example:
Complete Part No. with the required radius □□. Example:
E4.28.100.150.0 = crossbars removable along the inner and outer radius
R4.28.100.150.0 = lids openable along the outer radius from one side
Order index for colour options ▶ **www.igus.eu/info-colours**

Available from stock
Upon request

Unsupported applications | Short travels

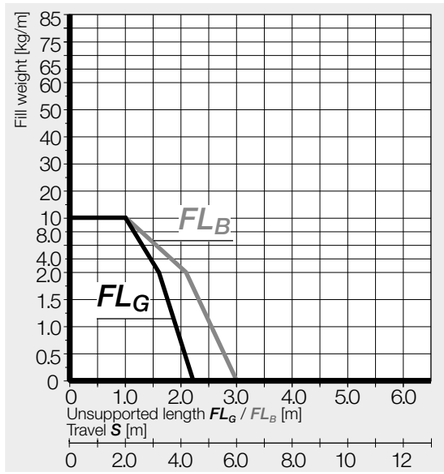

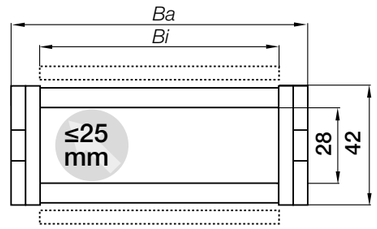

Inner height [mm]	28
Pitch [mm]	46
Links/m [pc.]	22
corresponds to [mm]	1,012
e-chain® length	$L_K = S/2 + K$

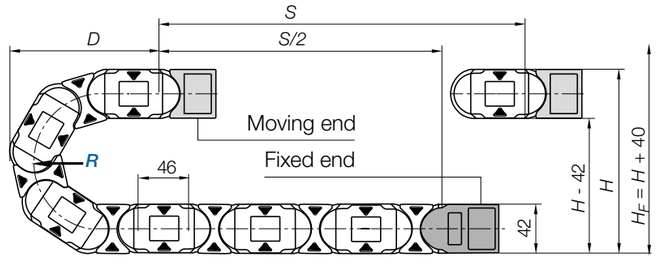

R	055*	063*	075	100	125	150	175	200	250
H	152	168	192	242	292	342	392	442	542
D	145	153	165	190	215	240	265	290	340
K	265	290	330	410	485	565	645	725	880

The required clearance height: $H_F = H + 40$mm (with 1.0kg/m fill weight)

*Radius not available for e-tubes

Gliding applications | For travel lengths from 10m to max. 200m

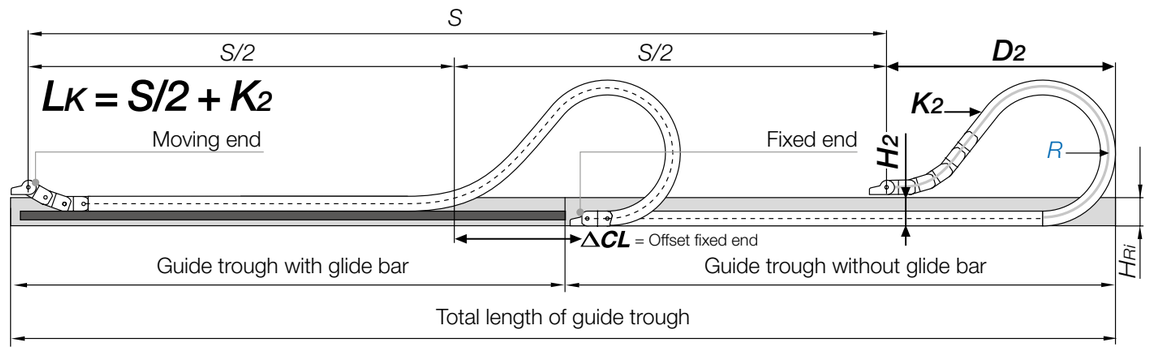

R	055*	063*	075	100	125	150	175	200	250
H_2	110	126	150	158	158	158	158	158	158
D_2^{+50}	122	130	142	350	490	530	665	730	935
K_2	265	290	330	598	782	920	1,104	1,242	1,610
ΔCL	–	–	–	150	270	300	400	450	600

Note: In case of travels between 5 and 10m we recommend an e-chain® with a longer unsupported length.

*Radius not available for e-tubes

Available from stock
Upon request

KMA mounting brackets | Attachment from any side | Pivoting | Locking

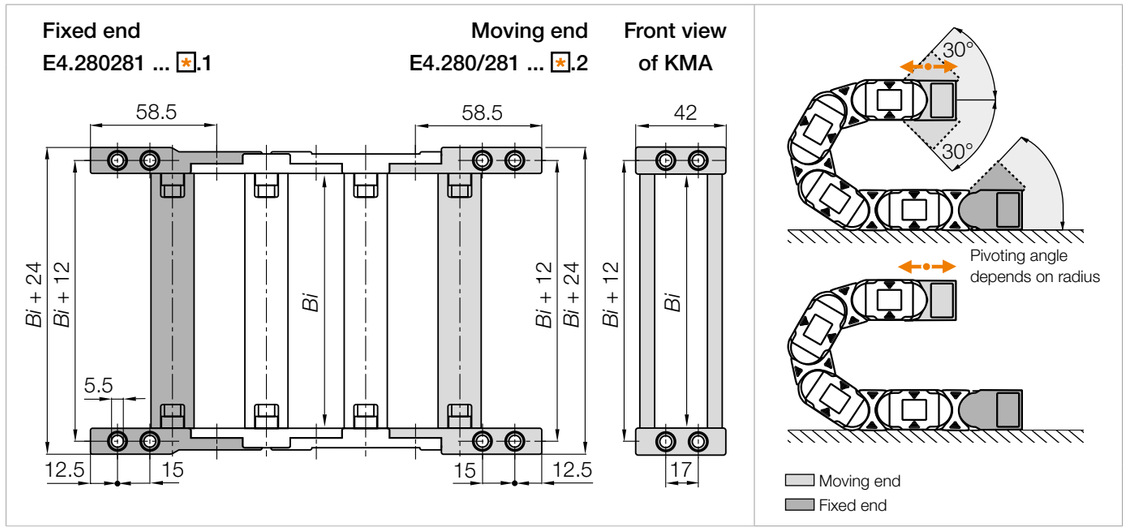

Width index	KMA full set		
	Part No. pivoting	Part No. locking	*Bi* [mm]
040.	E4.280.040.✱.12.□	E4.281.040.✱.12.□	40
050.	E4.280.050.✱.12.□	E4.281.050.✱.12.□	50
052.	E4.280.052.✱.12.□	E4.281.052.✱.12.□	52
062.	E4.280.062.✱.12.□	E4.281.062.✱.12.□	62
070.	E4.280.070.✱.12.□	E4.281.070.✱.12.□	70
075.	E4.280.075.✱.12.□	E4.281.075.✱.12.□	75
087.	E4.280.087.✱.12.□	E4.281.087.✱.12.□	87
100.	E4.280.100.✱.12.□	E4.281.100.✱.12.□	100

Width index	KMA full set		
	Part No. pivoting	Part No. locking	*Bi* [mm]
125.	E4.280.125.✱.12.□	E4.281.125.✱.12.□	125
150.	E4.280.150.✱.12.□	E4.281.150.✱.12.□	150
175.	E4.280.175.✱.12.□	E4.281.175.✱.12.□	175
200.	E4.280.200.✱.12.□	E4.281.200.✱.12.□	200
225.	E4.280.225.✱.12.□	E4.281.225.✱.12.□	225
250.	E4.280.250.✱.12.□	E4.281.250.✱.12.□	250
275.	E4.280.275.✱.12.□	E4.281.275.✱.12.□	275
300.	E4.280.300.✱.12.□	E4.281.300.✱.12.□	300

(KMA = polymer metal mounting bracket)

Available from stock
Upon request

KMA mounting brackets | Attachment from any side | Pivoting | Locking

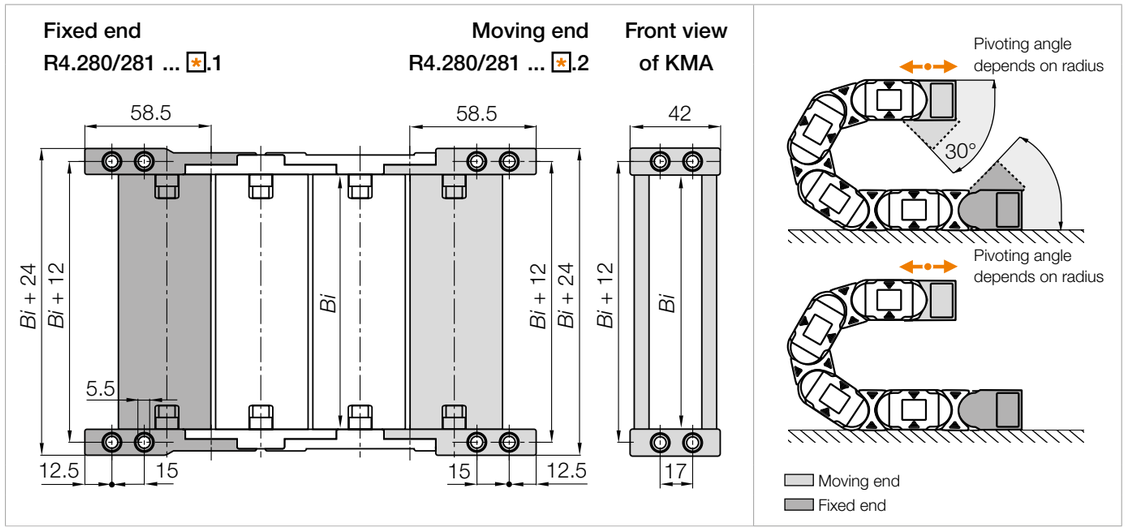

Width index	KMA full set		
	Part No. pivoting	Part No. locking	*Bi* [mm]
050.	R4.280.050.✱.12.□	R4.281.050.✱.12.□	50
075.	R4.280.075.✱.12.□	R4.281.075.✱.12.□	75
100.	R4.280.100.✱.12.□	R4.281.100.✱.12.□	100
125.	R4.280.125.✱.12.□	R4.281.125.✱.12.□	125
150.	R4.280.150.✱.12.□	R4.281.150.✱.12.□	150

Width index	KMA full set		
	Part No. pivoting	Part No. locking	*Bi* [mm]
175.	R4.280.175.✱.12.□	R4.281.175.✱.12.□	175
200.	R4.280.200.✱.12.□	R4.281.200.✱.12.□	200
225.	R4.280.225.✱.12.□	R4.281.225.✱.12.□	225
250.	R4.280.250.✱.12.□	R4.281.250.✱.12.□	250
300.	R4.280.300.✱.12.□	R4.281.300.✱.12.□	300

(KMA = polymer metal mounting bracket)

Note ✱: The e-chains® may end with either an inner or an outer side link. An outer side link should always be the first e-chain® link at the moving end. Please specify the index 1 (for odd) or 2 (for even) depending on an even or odd number of links required.

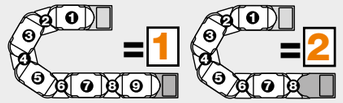

Order key

E4.280.100.2.12.A

Series	Width index	Even number of links	Full set	Pre-fitted

Note: The bracket orientations are set automatically when using this igus® KMA mounting bracket. To receive a KMA mounting bracket pre-fitted please add index **.A**.

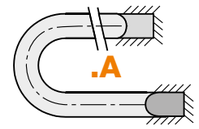

Available from stock
Upon request

Interior separation | Increase cable service life

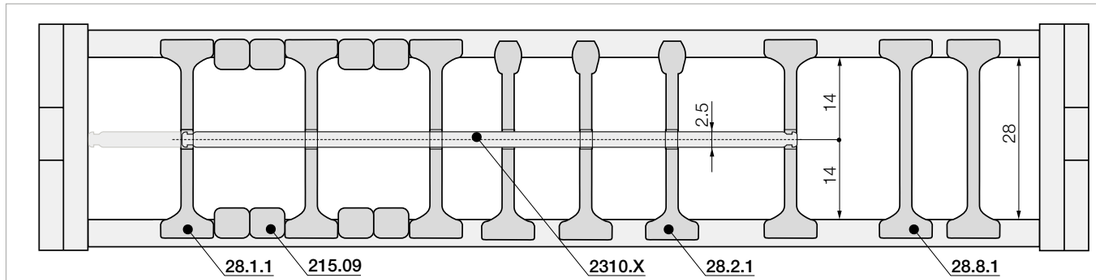

No lateral gap to side links necessary.
As standard separators are fitted every 2nd e-chain® link!



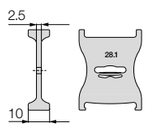

Part No. Standard separator	
unassembled	**28.1**
assembled	**28.1.1**

For all applications
Standard separator with a wide base for maximum holding force.



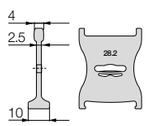

Part No. Separator, narrow top	
unassembled	**28.2**
assembled	**28.2.1**

For even faster installation
Wide on one side for high holding force, narrow on opposite side for easy cable fitting.



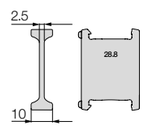

Part No. Locking separator	
unassembled	**28.8**
assembled	**28.8.1**

Locking separator for increased holding force
Locking separators offer higher crossbar opening forces for high humidity and/or large hydraulic hoses.



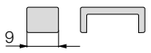

Part No. Spacer	
unassembled	**205.09**
assembled	**215.09**

Spacer for fixing the separator position
To avoid reducing the internal height by 2mm, they can also be mounted on the opening crossbar from the outside (not for long travels).

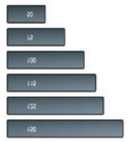

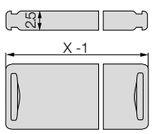

Part No. Shelf	
unassembled	**2300.X**
assembled	**2310.X**

Horizontal separation
Full-width shelf locks securely into separators at both ends, giving a fixed width. Can be used as full-width or modular shelving.

Width [mm]	Part No. unassembled	Part No. assembled
015	**2300.015**	**2310.015**
025	**2300.025**	**2310.025**
030	**2300.030**	**2310.030**
038	**2300.038**	**2310.038**
040	**2300.040**	**2310.040**
050	**2300.050**	**2310.050**

Width [mm]	Part No. unassembled	Part No. assembled
057	**2300.057**	**2310.057**
060	**2300.060**	**2310.060**
062	**2300.062**	**2310.062**
065	**2300.065**	**2310.065**
070	**2300.070**	**2310.070**
075	**2300.075**	**2310.075**

Width [mm]	Part No. unassembled	Part No. assembled
077	**2300.077**	**2310.077**
080	**2300.080**	**2310.080**
087	**2300.087**	**2310.087**
090	**2300.090**	**2310.090**
100	**2300.100**	**2310.100**
103	**2300.103**	**2310.103**

Width [mm]	Part No. unassembled	Part No. assembled
110	**2300.110**	**2310.110**
120	**2300.120**	**2310.120**
125	**2300.125**	**2310.125**

Available from stock
Upon request

Interior separation | Option 1 | Option 2

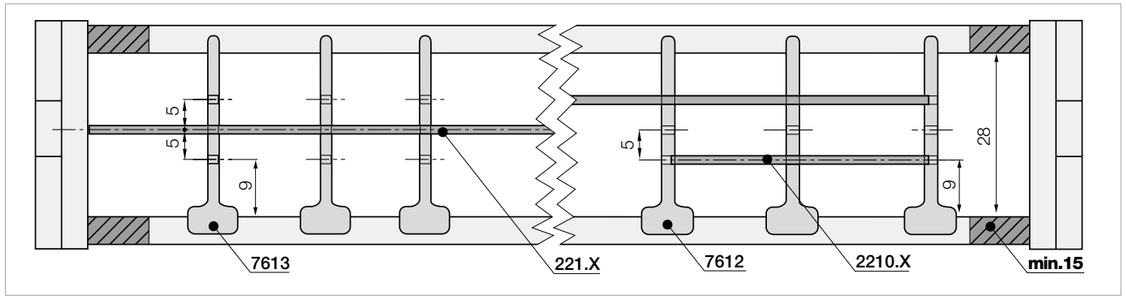

Note: Please be aware of the minimum lateral gap to the side links! **e-tubes: 15mm**
As standard separators are fitted every 2nd e-chain® link!

Version 1



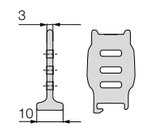

Part No. Slotted separator	
unassembled	**7603**
assembled	**7613**

Slotted separator
The slot allows basic vertical/ horizontal shelving arrangements.



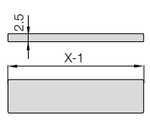

Part No. Full-width shelf	
unassembled	**220.X**
assembled	**221.X**

Full-width shelf
This option is for applications with many small cables with similar diameters. For full-width separation.

Width [mm]	Part No. unassembled	Part No. assembled
040	**220.40**	**221.40**
050	**220.50**	**221.50**
062	**220.62**	**221.62**

Width [mm]	Part No. unassembled	Part No. assembled
070	**220.70**	**221.70**
075	**220.75**	**221.75**
087	**220.87**	**221.87**

Width [mm]	Part No. unassembled	Part No. assembled
100	**220.100**	**221.100**
125	**220.125**	**221.125**
150	**220.150**	**221.150**

Width [mm]	Part No. unassembled	Part No. assembled
175	**220.175**	**221.175**
200	**220.200**	**221.200**

Version 2



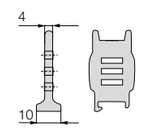

Part No. Slotted separator	
unassembled	**7602**
assembled	**7612**

Slotted separator
Allows modular shelving arrangements.



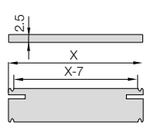

Part No. Shelf	
unassembled	**2200.X**
assembled	**2210.X**

Shelf
For applications involving many cables with different diameters, shelves can be fitted at different heights.

Width [mm]	Part No. unassembled	Part No. assembled
018	**2200.18**	**2210.18**
023	**2200.23**	**2210.23**
028	**2200.28**	**2210.28**
033	**2200.33**	**2210.33**

Width [mm]	Part No. unassembled	Part No. assembled
038	**2200.38**	**2210.38**
043	**2200.43**	**2210.43**
048	**2200.48**	**2210.48**
058	**2200.58**	**2210.58**

Width [mm]	Part No. unassembled	Part No. assembled
068	**2200.68**	**2210.68**
073	**2200.73**	**2210.73**
088	**2200.88**	**2210.88**
099	**2200.99**	**2210.99**

Width [mm]	Part No. unassembled	Part No. assembled
124	**2200.124**	**2210.124**
149	**2200.149**	**2210.149**

Available from stock
Upon request

Product range

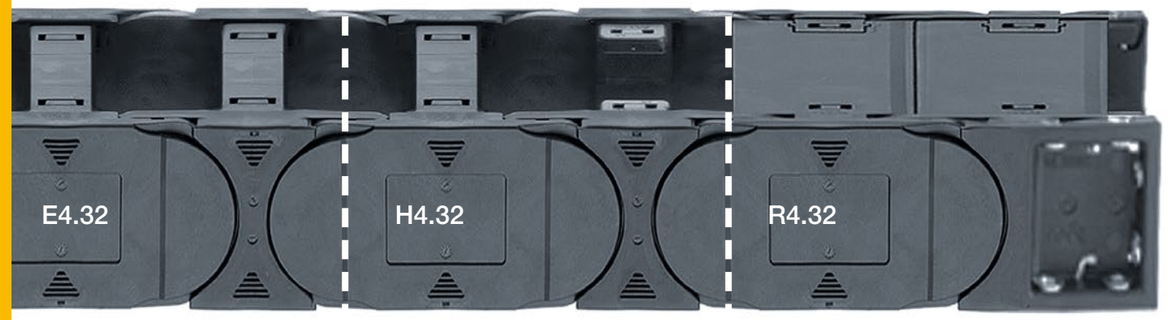

e-chains® with crossbars every link	e-chains® with crossbars every 2nd link	e-tubes closed		Bi [mm]	Ba [mm]	E4.32 [kg/m]	H4.32 [kg/m]	R4.32 [kg/m]
E4.32.	H4.32.	R4.32[1)]	05.□.0	50	73	≈ 1.68	≈ 1.62	≈ 1.83
E4.32.	H4.32.	–	06.□.0	68	91	≈ 1.81	≈ 1.68	–
E4.32.	H4.32.	R4.32	07.□.0	75	98	≈ 1.85	≈ 1.70	≈ 2.11
E4.32.	H4.32.	–	087.□.0	87	110	≈ 1.92	≈ 1.73	–
E4.32.	H4.32.	–	097.□.0	97	120	≈ 1.98	≈ 1.76	–
E4.32.	H4.32.	R4.32	10.□.0	100	123	≈ 2.00	≈ 1.78	≈ 2.33
E4.32.	H4.32.	R4.32	11.□.0	108	131	≈ 2.06	≈ 1.80	≈ 2.39
E4.32.	H4.32.	–	112.□.0	112	136	≈ 2.07	≈ 1.81	–
E4.32.	H4.32.	R4.32	12.□.0	125	148	≈ 2.18	≈ 1.87	≈ 2.57
E4.32.	H4.32.	–	137.□.0	137	161	≈ 2.24	≈ 1.89	–
E4.32.	H4.32.	R4.32	15.□.0	150	173	≈ 2.33	≈ 1.94	≈ 2.84
E4.32.	H4.32.	–	162.□.0	162	186	≈ 2.36	≈ 1.95	–
E4.32.	H4.32.	R4.32	17.□.0	168	191	≈ 2.44	≈ 1.99	≈ 3.00
E4.32.	H4.32.	–	18.□.0	175	198	≈ 2.46	≈ 2.00	–
E4.32.	H4.32.	–	187.□.0	187	211	≈ 2.51	≈ 2.03	–
E4.32.	H4.32.	R4.32	20.□.0	200	223	≈ 2.63	≈ 2.09	≈ 3.35

e-chains® with crossbars every link	e-chains® with crossbars every 2nd link	e-tubes closed		Bi [mm]	Ba [mm]	E4.32 [kg/m]	H4.32 [kg/m]	R4.32 [kg/m]
E4.32.	H4.32.	–	212.□.0	212	236	≈ 2.68	≈ 2.12	–
E4.32.	H4.32.	–	23.□.0	225	248	≈ 2.78	≈ 2.17	–
E4.32.	H4.32.	–	237.□.0	237	261	≈ 2.81	≈ 2.18	–
E4.32.	H4.32.	R4.32	25.□.0	250	273	≈ 2.95	≈ 2.25	≈ 4.15
E4.32.	H4.32.	–	262.□.0	262	286	≈ 3.03	≈ 2.29	–
E4.32.	H4.32.	–	28.□.0	275	298	≈ 3.10	≈ 2.33	–
E4.32.	H4.32.	–	29.□.0	287	311	≈ 3.14	≈ 2.34	–
E4.32.	H4.32.	R4.32	30.□.0	300	323	≈ 3.27	≈ 2.41	≈ 4.69
E4.32.	H4.32.	–	312.□.0	312	336	≈ 3.29	≈ 2.42	–
E4.32.	H4.32.	–	325.□.0	325	348	≈ 3.39	≈ 2.47	–
E4.32.	H4.32.	–	337.□.0	337	361	≈ 3.45	≈ 2.50	–
E4.32.	H4.32.	–	350.□.0	350	373	≈ 3.68	≈ 2.61	–
E4.32.	H4.32.	–	362.□.0	362	386	≈ 3.78	≈ 2.66	–
E4.32.	H4.32.	–	375.□.0	375	398	≈ 3.85	≈ 2.70	–
E4.32.	H4.32.	–	387.□.0	387	411	≈ 3.92	≈ 2.73	–
E4.32.	H4.32.	–	400.□.0	400	423	≈ 3.98	≈ 2.77	–

Available bend radii *R* [mm] | 063* | 075* | 100* | 125 | 150 | 175 | 200 | 220 | 250 | 300 |

*Radius not available for e-tubes. 1) Lid removable, non-openable

Order key

E4.32.30.150.0

Series / Type	Inner height	Width index	Bend radius	Colour index

Order example:
Complete Part No. with the required radius □. Example:
E4.32.30.150.0 = crossbars removable along the inner and outer radius
H4.32.30.150.0 = crossbars removable along the inner and outer radius
R4.32.30.150.0 = lids openable along the outer radius from one side
Order index for colour options ▶ **www.igus.eu/info-colours**

Available from stock
Upon request

Unsupported applications | Short travels

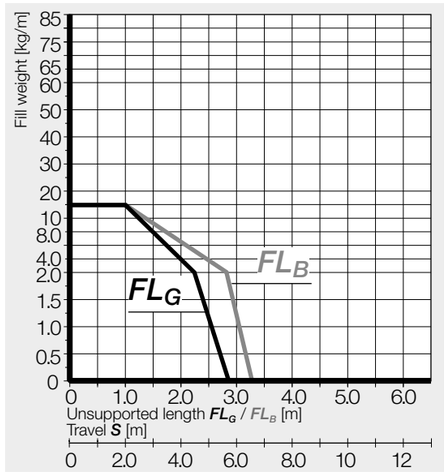

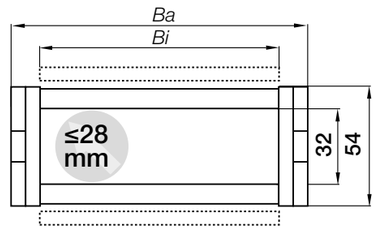

Inner height [mm]	32
Pitch [mm]	56
Links/m [pc.]	18
corresponds to [mm]	1,008
e-chain® length	$L_K = S/2 + K$

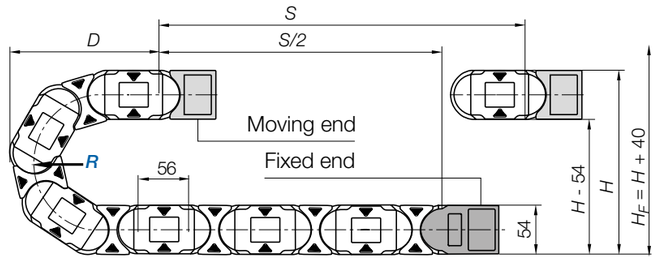

R	063*	075*	100*	125	150	175	200	220	250	300
H -0 +25	180	204	254	304	354	404	454	494	554	654
D	174	186	211	236	261	286	311	331	361	411
K	310	350	430	505	585	665	745	805	900	1,055

The required clearance height: $H_F = H + 40mm$ (with 2.0kg/m fill weight)

*Radius not available for e-tubes

Gliding applications | For travel lengths from 10m to max. 200m

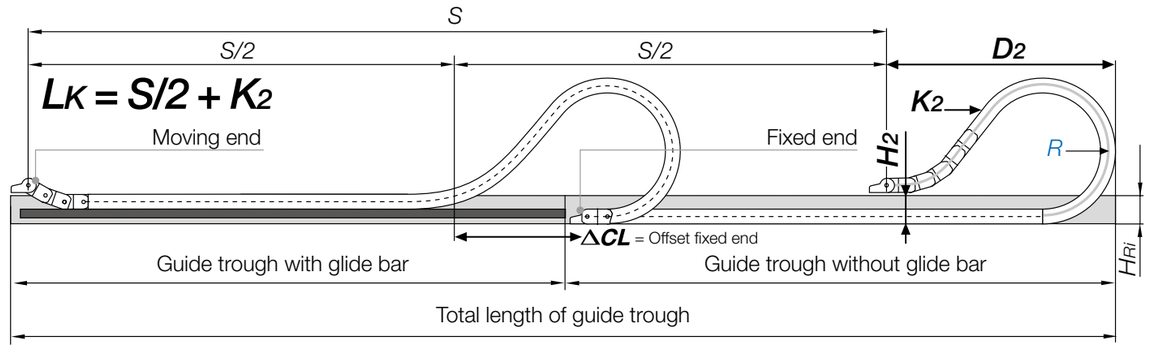

R	063*	075*	100*	125	150	175	200	220	250	300
H_2	126	150	166	166	166	166	166	166	166	166
D_2 +25	146	158	370	470	500	655	770	900	930	1,100
K_2	310	350	616	784	896	1,120	1,288	1,456	1,568	1,904
ΔCL	–	–	160	210	240	370	460	540	570	690

Note: In case of travels between 7 and 10m we recommend an e-chain® with a longer unsupported length.

*Radius not available for e-tubes

Available from stock
Upon request

KMA mounting brackets | Attachment from any side | Pivoting | Locking

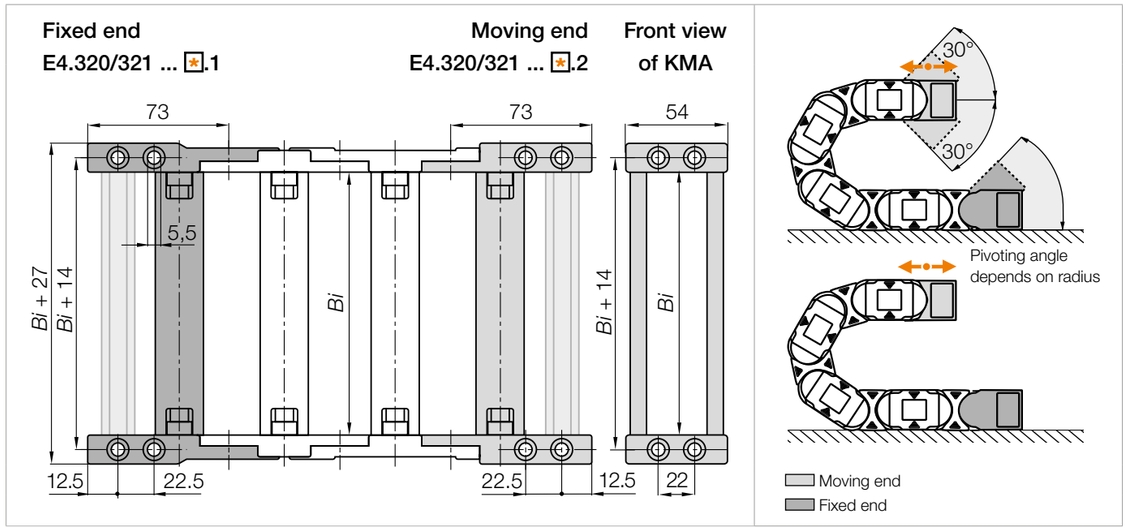

Width index	KMA full set Part No. pivoting	Part No. locking	*Bi* [mm]
05.	E4.320.05. ✱.12.□	E4.321.05. ✱.12.□	50
06.	E4.320.06. ✱.12.□	E4.321.06. ✱.12.□	68
07.	E4.320.07. ✱.12.□	E4.321.07. ✱.12.□	75
087.	E4.320.087. ✱.12.□	E4.321.087. ✱.12.□	87
09.	E4.320.09. ✱.12.□	E4.321.09. ✱.12.□	97
10.	E4.320.10. ✱.12.□	E4.321.10. ✱.12.□	100
11.	E4.320.11. ✱.12.□	E4.321.11. ✱.12.□	108
112.	E4.320.112. ✱.12.□	E4.321.112. ✱.12.□	112
12.	E4.320.12. ✱.12.□	E4.321.12. ✱.12.□	125
137.	E4.320.137. ✱.12.□	E4.321.137. ✱.12.□	137
15.	E4.320.15. ✱.12.□	E4.321.15. ✱.12.□	150
162.	E4.320.162. ✱.12.□	E4.321.162. ✱.12.□	162
17.	E4.320.17. ✱.12.□	E4.321.17. ✱.12.□	168
18.	E4.320.18. ✱.12.□	E4.321.18. ✱.12.□	175
187.	E4.320.187. ✱.12.□	E4.321.187. ✱.12.□	187
20.	E4.320.20. ✱.12.□	E4.321.20. ✱.12.□	200

Width index	KMA full set Part No. pivoting	Part No. locking	*Bi* [mm]
212.	E4.320.212. ✱.12.□	E4.321.212. ✱.12.□	212
23.	E4.320.23. ✱.12.□	E4.321.23. ✱.12.□	225
237.	E4.320.237. ✱.12.□	E4.321.237. ✱.12.□	237
25.	E4.320.25. ✱.12.□	E4.321.25. ✱.12.□	250
262.	E4.320.262. ✱.12.□	E4.321.262. ✱.12.□	262
28.	E4.320.28. ✱.12.□	E4.321.28. ✱.12.□	275
29.	E4.320.29. ✱.12.□	E4.321.29. ✱.12.□	287
30.	E4.320.30. ✱.12.□	E4.321.30. ✱.12.□	300
312.	E4.320.312. ✱.12.□	E4.321.312. ✱.12.□	312
325.	E4.320.325. ✱.12.□	E4.321.325. ✱.12.□	325
337.	E4.320.337. ✱.12.□	E4.321.337. ✱.12.□	337
350.	E4.320.350. ✱.12.□	E4.321.350. ✱.12.□	350
362.	E4.320.362. ✱.12.□	E4.321.362. ✱.12.□	362
375.	E4.320.375. ✱.12.□	E4.321.375. ✱.12.□	375
387.	E4.320.387. ✱.12.□	E4.321.387. ✱.12.□	387
400.	E4.320.400. ✱.12.□	E4.321.400. ✱.12.□	400

(KMA = polymer metal mounting bracket)

Available from stock
Upon request

KMA mounting brackets | Attachment from any side | Pivoting | Locking

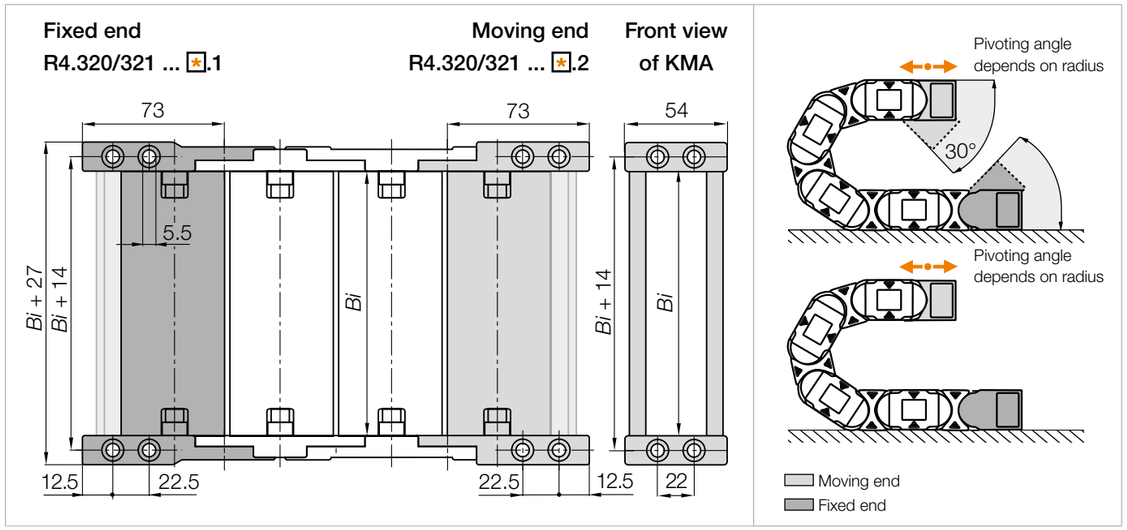

Width index	KMA full set Part No. pivoting	Part No. locking	*Bi* [mm]
05.	R4.320.05. ✱.12.□	R4.321.05. ✱.12.□	50
07.	R4.320.07. ✱.12.□	R4.321.07. ✱.12.□	75
10.	R4.320.10. ✱.12.□	R4.321.10. ✱.12.□	100
11.	R4.320.11. ✱.12.□	R4.321.11. ✱.12.□	108
12.	R4.320.12. ✱.12.□	R4.321.12. ✱.12.□	125

Width index	KMA full set Part No. pivoting	Part No. locking	*Bi* [mm]
15.	R4.320.15. ✱.12.□	R4.321.15. ✱.12.□	150
17.	R4.320.17. ✱.12.□	R4.321.17. ✱.12.□	168
20.	R4.320.20. ✱.12.□	R4.321.20. ✱.12.□	200
25.	R4.320.25. ✱.12.□	R4.321.25. ✱.12.□	250
30.	R4.320.30. ✱.12.□	R4.321.30. ✱.12.□	300

(KMA = polymer metal mounting bracket)

Note ✱: The e-chains® may end with either an inner or an outer side link. An outer side link should always be the first e-chain® link at the moving end. Please specify the index 1 (for odd) or 2 (for even) depending on an even or odd number of links required.

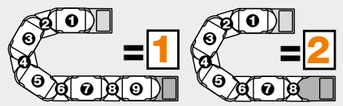

Order key

E4.320.30.2.12.C.A2

Series	Width index	Even number of links	Full set	C-profile option	Pre-fitted

Note: Possible orientations for KMA mounting brackets. For mounting brackets pre-fitted **without strain relief**, please add index **.A**. For types pre-fitted **with strain relief** please add index **.A1**, **.A2**, **.A3** or **.A4**.



For the C-profile option please add index **.C**.

Available from stock
Upon request

Interior separation | Increase cable service life

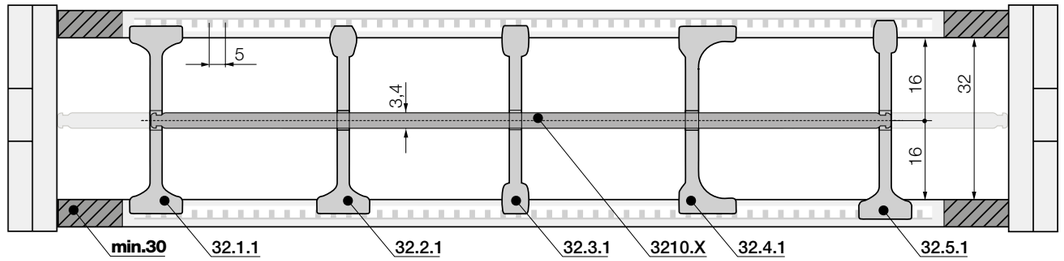

Note: Please be aware of the minimum lateral gap to the side links! **e-tubes: 30mm**
As standard separators are fitted every 2nd e-chain® link!



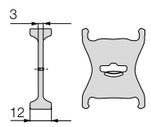

Part No.
Standard separator
unassembled **32.1**
assembled **32.1.1**

For all applications
Standard separator with a wide base for maximum holding force.



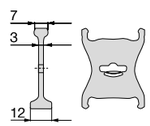

Part No. Separator, narrow top
unassembled **32.2**
assembled **32.2.1**

For even faster installation
Wide on one side for high holding force, narrow on opposite side for easy cable fitting.



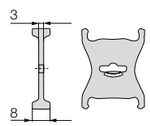

Part No.
Separator, narrow
unassembled **32.3**
assembled **32.3.1**

For a large number of thin cables
Separator with a narrow base for a large number of thin cables side by side. Saves space.



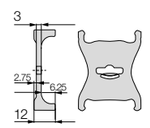

Part No.
Separator, asymmetrical
unassembled **32.4**
assembled **32.4.1**

For side-mounted applications
Asymmetrical separator, for defined gap distance. No additional spacers required.



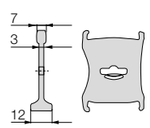

Part No.
Notch separator
unassembled **32.5**
assembled **32.5.1**

Locks securely in preset increments
Notch separator for exact positioning. Recommended for side-mounted applications.

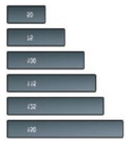

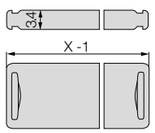

Part No.
Shelf
unassembled **3200.X**
assembled **3210.X**

Horizontal separation
Full-width shelf locks securely into separators at both ends, giving a fixed width. Can be used as full-width or modular shelving.

Width [mm]	Part No. unassembled	Part No. assembled
050	**3200.050**	**3210.050**
075	**3200.075**	**3210.075**
100	**3200.100**	**3210.100**

Width [mm]	Part No. unassembled	Part No. assembled
115	**3200.115**	**3210.115**
125	**3200.125**	**3210.125**
150	**3200.150**	**3210.150**

Width [mm]	Part No. unassembled	Part No. assembled
175	**3200.175**	**3210.175**
200	**3200.200**	**3210.200**
225	**3200.225**	**3210.225**

Width [mm]	Part No. unassembled	Part No. assembled
250	**3200.250**	**3210.250**

Product range

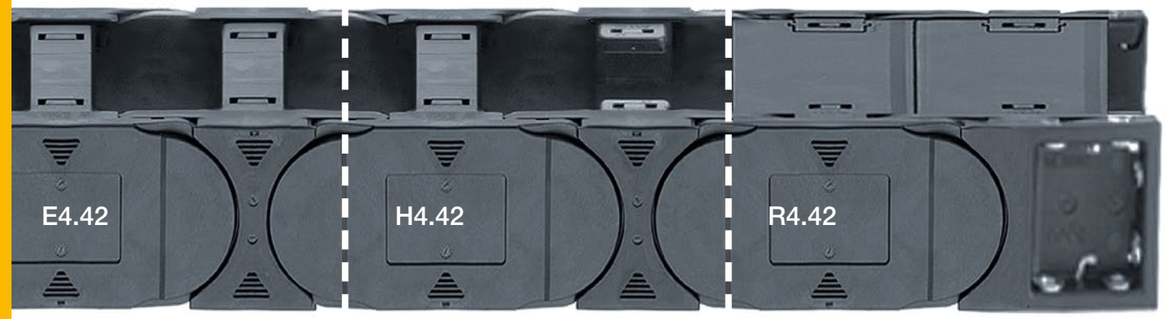

e-chains® with crossbars every link	e-chains® with crossbars every 2nd link	e-tubes closed		Bi [mm]	Ba [mm]	E4.42 [kg/m]	H4.42 [kg/m]	R4.42 [kg/m]
E4.42.	H4.42.	R4.42.[1]	05.□.0	50	76	≈ 2.10	≈ 2.05	≈ 2.74
E4.42.	H4.42.	R4.42.[1]	06.□.0	68	94	≈ 2.21	≈ 2.10	–
E4.42.	H4.42.	R4.42.	07.□.0	75	101	≈ 2.24	≈ 2.12	≈ 3.05
E4.42.	H4.42.	R4.42.	087.□.0	87	114	≈ 2.30	≈ 2.15	≈ 3.20
E4.42.	H4.42.	–	097.□.0	97	123	≈ 2.35	≈ 2.17	–
E4.42.	H4.42.	R4.42.	10.□.0	100	126	≈ 2.37	≈ 2.18	≈ 3.34
E4.42.	H4.42.	R4.42.	11.□.0	108	134	≈ 2.42	≈ 2.20	≈ 3.39
E4.42.	H4.42.	–	112.□.0	112	139	≈ 2.43	≈ 2.21	–
E4.42.	H4.42.	R4.42.	12.□.0	125	151	≈ 2.52	≈ 2.26	≈ 3.58
E4.42.	H4.42.	–	137.□.0	137	164	≈ 2.57	≈ 2.28	–
E4.42.	H4.42.	R4.42.	15.□.0	150	176	≈ 2.64	≈ 2.32	≈ 3.87
E4.42.	H4.42.	–	162.□.0	162	189	≈ 2.66	≈ 2.33	–
E4.42.	H4.42.	R4.42.	17.□.0	168	194	≈ 2.73	≈ 2.36	≈ 4.10
E4.42.	H4.42.	–	18.□.0	175	201	≈ 2.75	≈ 2.37	–
E4.42.	H4.42.	–	187.□.0	187	214	≈ 2.79	≈ 2.39	–
E4.42.	H4.42.	R4.42.	20.□.0	200	226	≈ 2.90	≈ 2.44	≈ 4.44

e-chains® with crossbars every link	e-chains® with crossbars every 2nd link	e-tubes closed		Bi [mm]	Ba [mm]	E4.42 [kg/m]	H4.42 [kg/m]	R4.42 [kg/m]
E4.42.	H4.42.	–	212.□.0	212	239	≈ 2.94	≈ 2.46	–
E4.42.	H4.42.	–	23.□.0	225	251	≈ 3.02	≈ 2.51	–
E4.42.	H4.42.	–	237.□.0	237	264	≈ 3.05	≈ 2.52	–
E4.42.	H4.42.	R4.42.	25.□.0	250	276	≈ 3.16	≈ 2.58	≈ 5.44
E4.42.	H4.42.	–	262.□.0	262	289	≈ 3.23	≈ 2.61	–
E4.42.	H4.42.	–	28.□.0	275	301	≈ 3.29	≈ 2.64	–
E4.42.	H4.42.	–	29.□.0	287	314	≈ 3.32	≈ 2.65	–
E4.42.	H4.42.	R4.42.	30.□.0	300	326	≈ 3.42	≈ 2.71	≈ 6.09
E4.42.	H4.42.	–	312.□.0	312	339	≈ 3.44	≈ 2.72	–
E4.42.	H4.42.	–	325.□.0	325	351	≈ 3.53	≈ 2.76	–
E4.42.	H4.42.	–	337.□.0	337	364	≈ 3.58	≈ 2.79	–
E4.42.	H4.42.	–	350.□.0	350	376	≈ 3.77	≈ 2.88	–
E4.42.	H4.42.	–	362.□.0	362	389	≈ 3.85	≈ 2.92	–
E4.42.	H4.42.	–	375.□.0	375	402	≈ 3.91	≈ 2.95	–
E4.42.	H4.42.	–	387.□.0	387	414	≈ 3.97	≈ 2.98	–
E4.42.	H4.42.	–	400.□.0	400	426	≈ 4.02	≈ 3.01	–

Available bend radii *R* [mm] | 075* | 100* | 115* | 125 | 150 | 160 | 175 | 200 | 250 | 300 | 350 |

*Radius not available for e-tubes. 1) Lid removable, non-openable

Order key

E4.42.30.150.0

Series / Type | Inner height | Width index | Bend radius | Colour index

Order example:

Complete Part No. with the required radius □. Example:

E4.42.30.150.0 = crossbars removable along the inner and outer radius

H4.42.30.150.0 = crossbars removable along the inner and outer radius

R4.42.30.150.0 = lids openable along the outer radius from one side

Order index for colour options ▶ **www.igus.eu/info-colours**

Available from stock

Upon request

E4.1 | Series E4.42 / H4.42 / R4.42

E4.42
H4.42
R4.42

Unsupported applications | Short travels

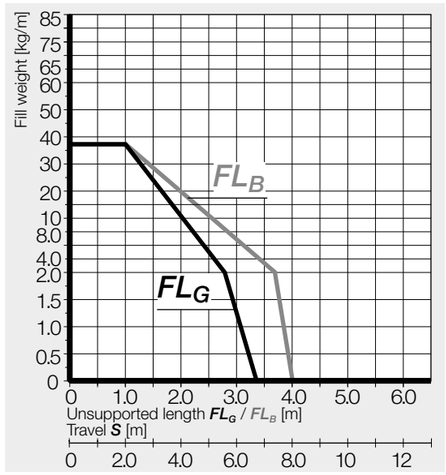

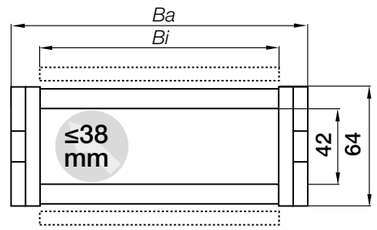

Inner height [mm]	42
Pitch [mm]	67
Links/m [pc.]	15
corresponds to [mm]	1,005
e-chain® length	$L_K = S/2 + K$

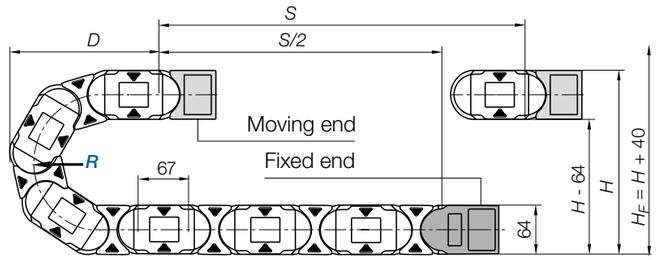

R	075*	100*	115*	125	150	160	175	200	250	300	350
H^{-0}_{+25}	214	264	294	314	364	384	414	464	564	664	764
D	208	233	248	258	283	293	308	333	383	433	483
K	370	450	500	530	610	640	685	765	920	1,080	1,235

The required clearance height: $H_F = H + 40mm$ (with 3.0kg/m fill weight)

*Radius not available for e-tubes

Gliding applications | For travel lengths from 12m to max. 300m

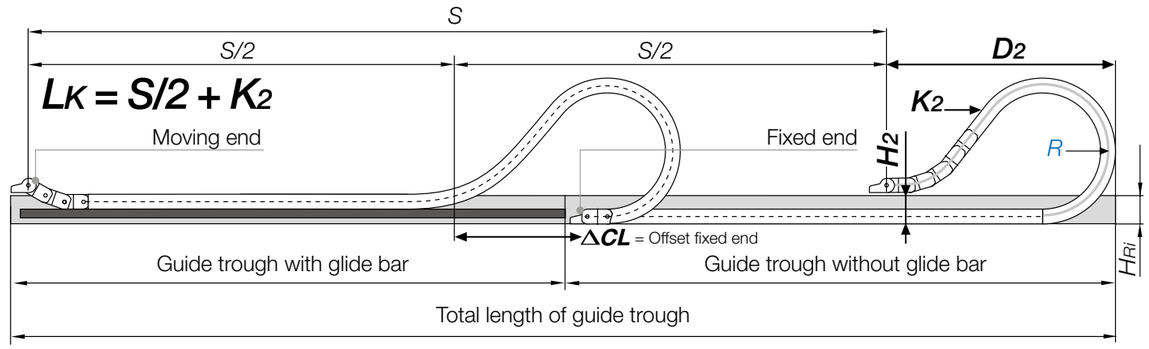

R	075*	100*	115*	125	150	160	175	200	250	300	350
H_2	150	186	186	186	186	186	186	186	186	186	186
D_2^{+50}	174	390	435	475	570	623	670	780	1,030	1,150	1,500
K_2	370	603	737	804	938	1,072	1,139	1,340	1,675	1,943	2,412
ΔCL	–	170	200	230	300	380	380	460	660	730	1,030

Note: In case of travels between 8 and 12m we recommend an e-chain® with a longer unsupported length.

*Radius not available for e-tubes

Available from stock

Upon request

E4.1 e-chains® | Series E4.42 / H4.42

KMA mounting brackets | Attachment from any side | Pivoting | Locking

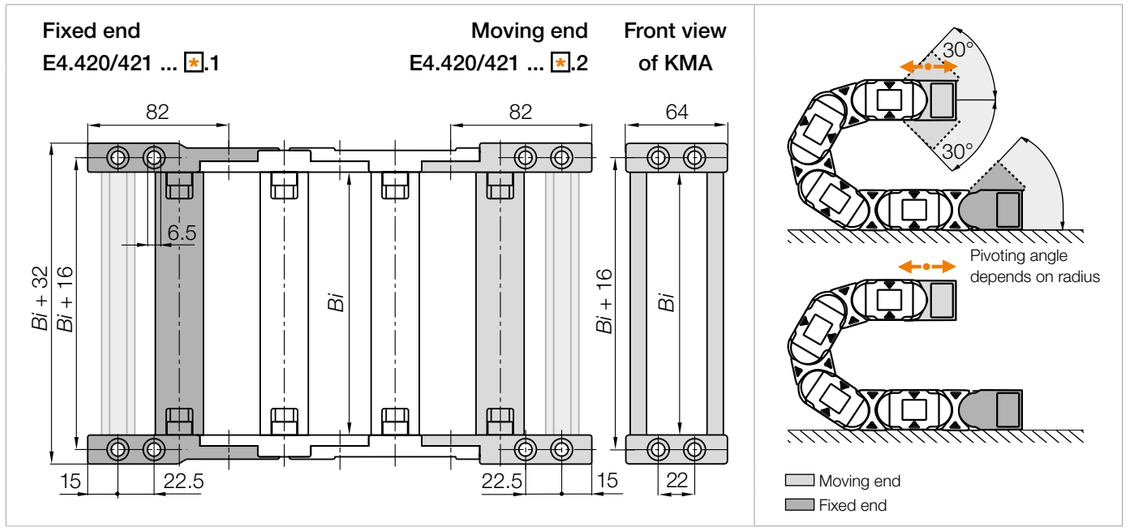

Width index	KMA full set		
	Part No. pivoting	Part No. locking	*Bi* [mm]
05.	E4.420.05. ✱.12.□	E4.421.05. ✱.12.□	50
06.	E4.420.06. ✱.12.□	E4.421.06. ✱.12.□	68
07.	E4.420.07. ✱.12.□	E4.421.07. ✱.12.□	75
087.	E4.420.087. ✱.12.□	E4.421.087. ✱.12.□	87
09.	E4.420.09. ✱.12.□	E4.421.09. ✱.12.□	97
10.	E4.420.10. ✱.12.□	E4.421.10. ✱.12.□	100
11.	E4.420.11. ✱.12.□	E4.421.11. ✱.12.□	108
112.	E4.420.112. ✱.12.□	E4.421.112. ✱.12.□	112
12.	E4.420.12. ✱.12.□	E4.421.12. ✱.12.□	125
137.	E4.420.137. ✱.12.□	E4.421.137. ✱.12.□	137
15.	E4.420.15. ✱.12.□	E4.421.15. ✱.12.□	150
162.	E4.420.162. ✱.12.□	E4.421.162. ✱.12.□	162
17.	E4.420.17. ✱.12.□	E4.421.17. ✱.12.□	168
18.	E4.420.18. ✱.12.□	E4.421.18. ✱.12.□	175
187.	E4.420.187. ✱.12.□	E4.421.187. ✱.12.□	187
20.	E4.420.20. ✱.12.□	E4.421.20. ✱.12.□	200

Width index	KMA full set		
	Part No. pivoting	Part No. locking	*Bi* [mm]
212.	E4.420.212. ✱.12.□	E4.421.212. ✱.12.□	212
23.	E4.420.23. ✱.12.□	E4.421.23. ✱.12.□	225
237.	E4.420.237. ✱.12.□	E4.421.237. ✱.12.□	237
25.	E4.420.25. ✱.12.□	E4.421.25. ✱.12.□	250
262.	E4.420.262. ✱.12.□	E4.421.262. ✱.12.□	262
28.	E4.420.28. ✱.12.□	E4.421.28. ✱.12.□	275
29.	E4.420.29. ✱.12.□	E4.421.29. ✱.12.□	287
30.	E4.420.30. ✱.12.□	E4.421.30. ✱.12.□	300
312.	E4.420.312. ✱.12.□	E4.421.312. ✱.12.□	312
325.	E4.420.325. ✱.12.□	E4.421.325. ✱.12.□	325
337.	E4.420.337. ✱.12.□	E4.421.337. ✱.12.□	337
350.	E4.420.350. ✱.12.□	E4.421.350. ✱.12.□	350
362.	E4.420.362. ✱.12.□	E4.421.362. ✱.12.□	362
375.	E4.420.375. ✱.12.□	E4.421.375. ✱.12.□	375
387.	E4.420.387. ✱.12.□	E4.421.387. ✱.12.□	387
400.	E4.420.400. ✱.12.□	E4.421.400. ✱.12.□	400

(KMA = polymer metal mounting bracket)

Available from stock
Upon request

E4.1 e-tubes | Series R4.42

KMA mounting brackets | Attachment from any side | Pivoting | Locking

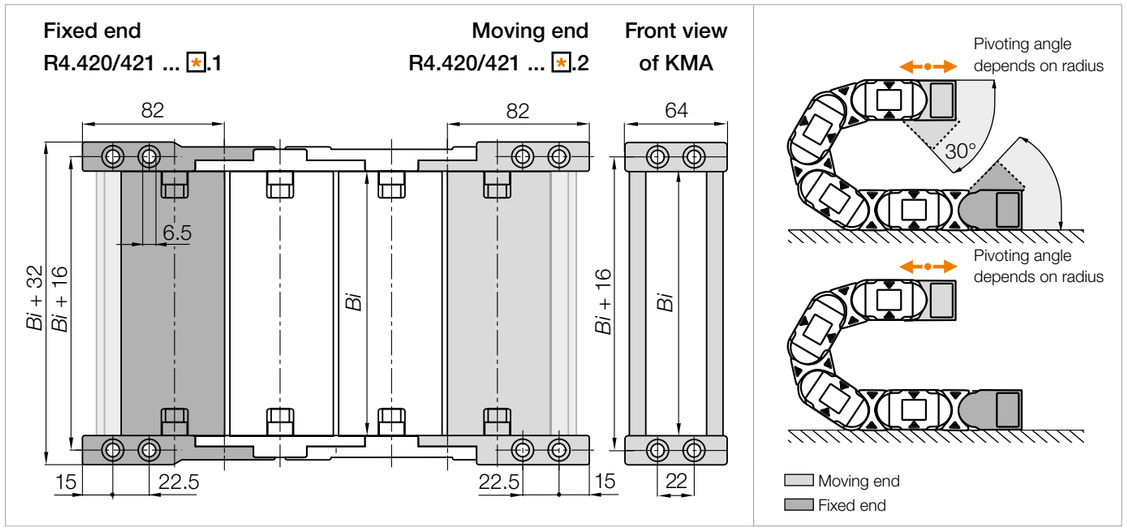

Width index	KMA full set		
	Part No. pivoting	Part No. locking	*Bi* [mm]
05.	R4.420.05. ✱.12.□	R4.421.05. ✱.12.□	50
06.	R4.420.06. ✱.12.□	R4.421.06. ✱.12.□	68
07.	R4.420.07. ✱.12.□	R4.421.07. ✱.12.□	75
087.	R4.420.087. ✱.12.□	R4.421.087. ✱.12.□	87
10.	R4.420.10. ✱.12.□	R4.421.10. ✱.12.□	100
11.	R4.420.11. ✱.12.□	R4.421.11. ✱.12.□	108

Width index	KMA full set		
	Part No. pivoting	Part No. locking	*Bi* [mm]
12.	R4.420.12. ✱.12.□	R4.421.12. ✱.12.□	125
15.	R4.420.15. ✱.12.□	R4.421.15. ✱.12.□	150
17.	R4.420.17. ✱.12.□	R4.421.17. ✱.12.□	168
20.	R4.420.20. ✱.12.□	R4.421.20. ✱.12.□	200
25.	R4.420.25. ✱.12.□	R4.421.25. ✱.12.□	250
30.	R4.420.30. ✱.12.□	R4.421.30. ✱.12.□	300

(KMA = polymer metal mounting bracket)

Note ✱: The e-chains® may end with either an inner or an outer side link. An outer side link should always be the first e-chain® link at the moving end. Please specify the index 1 (for odd) or 2 (for even) depending on an even or odd number of links required.

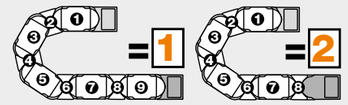

Order key

E4.420.30.2.12.C.A2

Series	Width index	Even number of links	Full set	C-profile option	Pre-fitted

Note: Possible orientations for KMA mounting brackets. For mounting brackets pre-fitted **without strain relief**, please add index **.A**. For types pre-fitted **with strain relief** please add index **.A1**, **.A2**, **.A3** or **.A4**.



For the C-profile option please add index **.C**.

Available from stock
Upon request

Interior separation | Increase cable service life

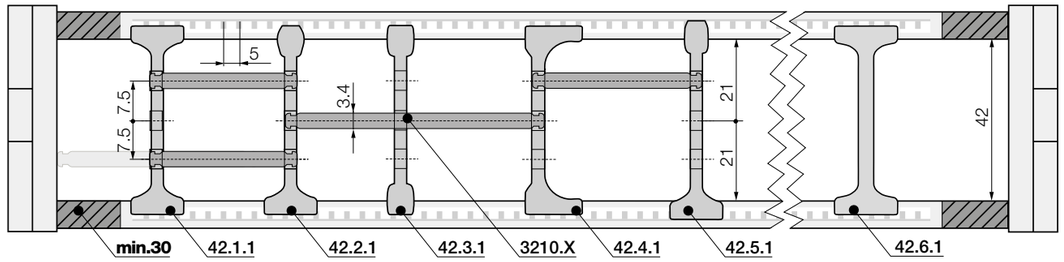

Note: Please be aware of the minimum lateral gap to the side links! **e-tubes: 30mm**
As standard separators are fitted every 2nd e-chain® link!



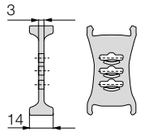

Part No.	
Standard separator	
unassembled	**42.1**
assembled	**42.1.1**

For all applications

Standard separator with a wide base for maximum holding force.



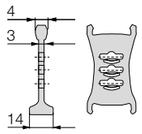

Part No. Separator,	
narrow top	
unassembled	**42.2**
assembled	**42.2.1**

For even faster installation

Wide on one side for high holding force, narrow on opposite side for easy cable fitting.



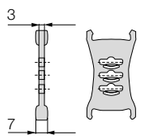

Part No.	
Separator, narrow	
unassembled	**42.3**
assembled	**42.3.1**

For a large number of thin cables

Separator with a narrow base for a large number of thin cables side by side. Saves space.



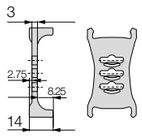

Part No.	
Separator, asymmetrical	
unassembled	**42.4**
assembled	**42.4.1**

For side-mounted applications

Asymmetrical separator, for defined gap distance. No additional spacers required.



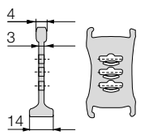

Part No.	
Notch separator*	
unassembled	**42.5**
assembled	**42.5.1**

Locks securely in preset increments

Notch separator* for exact positioning. Recommended for side-mounted applications. *Suitable from ***Bi*** 75



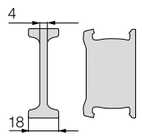

Part No.	
Notch locking separator*	
unassembled	**42.6**
assembled	**42.6.1**

Notch locking separator for increased holding force

For higher crossbar opening forces for high humidity and/or large hydraulic hoses. They can be positioned precisely and then locked in position.

*Only suitable for e-chains®

Available from stock
Upon request

E4.1 | Series E4.42 / H4.42 / R4.42

E4.42
H4.42
R4.42

Interior separation | To allow faster filling

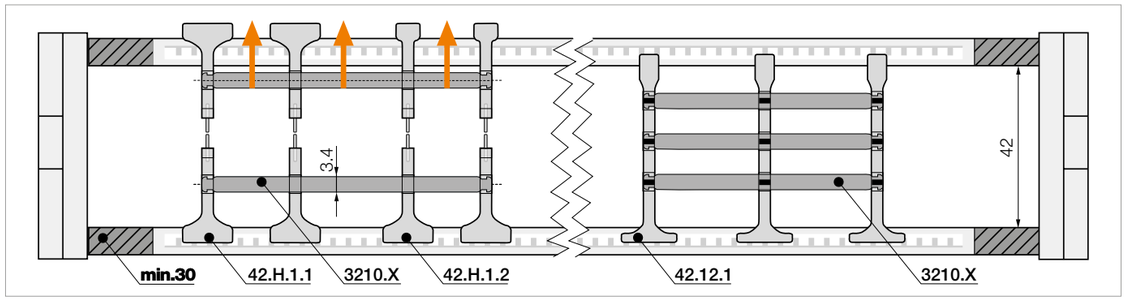

Note: Please be aware of the minimum lateral gap to the side links! **e-tubes: 30mm**
As standard separators are fitted every 2nd e-chain® link!



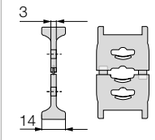

Part No.	
Split separator, wide top	
unassembled	**42.H.1**
assembled	**42.H.1.1**



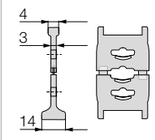

Part No.	
Split separator, narrow top	
unassembled	**42.H.2**
assembled	**42.H.2.1**

Split separators

In order to fill e-chains® more easily and effectively, these separators can be split in the middle. This allows easier access to middle shelf partitions. Fast assembly and easy retrofit. 2 types available: with wide or narrow top.



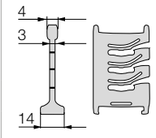

Part No.	
Lean separator	
unassembled	**42.12**
assembled	**42.12.1**

Lean separators[1)]

Quick fitting of shelves in several layers. Enables extremely fast replacement of individual cables in very full e-chains®. Only suitable for e-chains®.



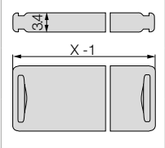

Part No.	
Shelf	
unassembled	**3200.X**
assembled	**3210.X**

Horizontal separation

Full-width shelf locks securely into separators at both ends, giving a fixed width. Can be used as full-width or modular shelving.

Width [mm]	Part No. unassembled	Part No. assembled
050	**3200.050**	**3210.050**
075	**3200.075**	**3210.075**
100	**3200.100**	**3210.100**

Width [mm]	Part No. unassembled	Part No. assembled
115	**3200.115**	**3210.115**
125	**3200.125**	**3210.125**
150	**3200.150**	**3210.150**

Width [mm]	Part No. unassembled	Part No. assembled
175	**3200.175**	**3210.175**
200	**3200.200**	**3210.200**
225	**3200.225**	**3210.225**

Width [mm]	Part No. unassembled	Part No. assembled
250	**3200.250**	**3210.250**



Lean separator for even faster filling: quickly insert several layers of cables into the e-chain® and reduce the installation time by up to 50%. Measured on a 4m long e-chain® fitted with 12 cables. **1) Note: Please combine a maximum of four lean separators with one shelf. Not suitable for side-mounted e-chains®!**

Available from stock
Upon request

Product range

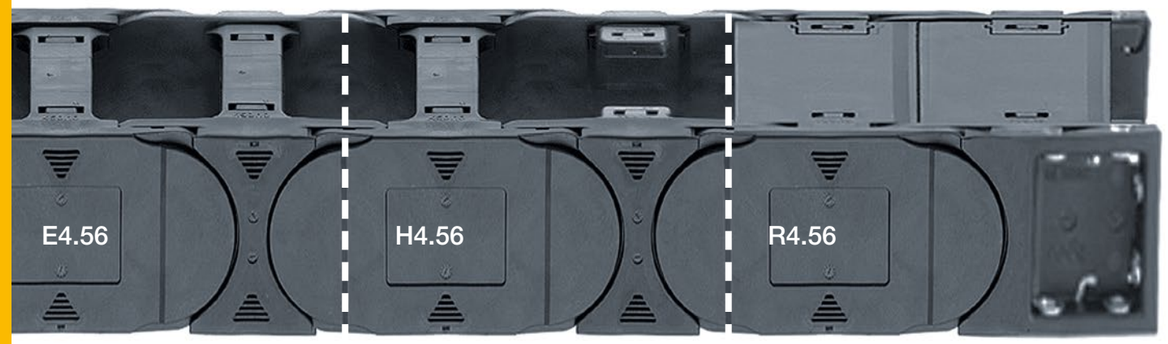

e-chains® with crossbars every link	e-chains® with crossbars every 2nd link	e-tubes closed		Bi [mm]	Ba [mm]	E4.56 [kg/m]	H4.56 [kg/m]	R4.56 [kg/m]
E4.56.	H4.56.	–	05.□.0	50	84	≈ 3.60	≈ 3.59	–
E4.56.	H4.56.	–	055.□.0	55	89	≈ 3.65	≈ 3.62	–
E4.56.	H4.56.	–	06.□.0	65	99	≈ 3.69	≈ 3.63	–
E4.56.	H4.56.	R4.56.[1)]	07.□.0	75	109	≈ 3.76	≈ 3.67	≈ 4.31
E4.56.	H4.56.	–	08.□.0	87	121	≈ 3.85	≈ 3.71	–
E4.56.	H4.56.	R4.56.	10.□.0	100	134	≈ 3.93	≈ 3.75	≈ 4.65
E4.56.	H4.56.	–	11.□.0	112	147	≈ 4.05	≈ 3.81	–
E4.56.	H4.56.	R4.56.	12.□.0	125	159	≈ 4.13	≈ 3.85	≈ 5.01
E4.56.	H4.56.	–	13.□.0	137	172	≈ 4.26	≈ 3.92	–
E4.56.	H4.56.	R4.56.	15.□.0	150	184	≈ 4.28	≈ 3.93	≈ 5.36
E4.56.	H4.56.	–	16.□.0	162	197	≈ 4.41	≈ 3.99	–
E4.56.	H4.56.	–	169.□.0	169	204	≈ 4.49	≈ 4.03	–
E4.56.	H4.56.	R4.56.	17.□.0	175	209	≈ 4.55	≈ 4.06	≈ 5.73
E4.56.	H4.56.	–	182.□.0	182	217	≈ 4.59	≈ 4.08	–
E4.56.	H4.56.	–	18.□.0	187	222	≈ 4.66	≈ 4.12	–
E4.56.	H4.56.	R4.56.	20.□.0	200	234	≈ 4.71	≈ 4.14	≈ 5.96
E4.56.	H4.56.	–	207.□.0	207	242	≈ 4.77	≈ 4.17	–
E4.56.	H4.56.	–	21.□.0	212	247	≈ 4.78	≈ 4.18	–
E4.56.	H4.56.	–	22.□.0	225	259	≈ 4.85	≈ 4.21	–
E4.56.	H4.56.	–	23.□.0	237	272	≈ 4.96	≈ 4.27	–
E4.56.	H4.56.	R4.56.	25.□.0	250	284	≈ 5.07	≈ 4.32	≈ 6.64
E4.56.	H4.56.	–	26.□.0	262	297	≈ 5.16	≈ 4.37	–
E4.56.	H4.56.	R4.56.	27.□.0	275	309	≈ 5.27	≈ 4.42	≈ 6.97
E4.56.	H4.56.	–	28.□.0	287	322	≈ 5.32	≈ 4.45	–
E4.56.	H4.56.	R4.56.	30.□.0	300	334	≈ 5.48	≈ 4.53	≈ 7.31
E4.56.	H4.56.	–	31.□.0	312	347	≈ 5.51	≈ 4.54	–
E4.56.	H4.56.	–	32.□.0	325	359	≈ 5.62	≈ 4.60	–
E4.56.	H4.56.	–	33.□.0	337	372	≈ 5.74	≈ 4.66	–
E4.56.	H4.56.	R4.56.	35.□.0	350	384	≈ 5.88	≈ 4.73	≈ 8.00
E4.56.	H4.56.	–	36.□.0	362	397	≈ 5.90	≈ 4.74	–
E4.56.	H4.56.	–	37.□.0	375	409	≈ 6.02	≈ 4.79	–
E4.56.	H4.56.	–	38.□.0	387	422	≈ 6.06	≈ 4.82	–
E4.56.	H4.56.	R4.56.	40.□.0	400	434	≈ 6.01	≈ 4.79	≈ 8.68
E4.56.	H4.56.	–	41.□.0	412	447	≈ 6.25	≈ 4.91	–
E4.56.	H4.56.	–	42.□.0	425	459	≈ 6.37	≈ 4.97	–
E4.56.	H4.56.	–	43.□.0	437	472	≈ 6.46	≈ 5.01	–
E4.56.	H4.56.	–	45.□.0	450	484	≈ 6.65	≈ 5.11	–
E4.56.	H4.56.	R4.56.	46.□.0	462	497	≈ 6.70	≈ 5.14	≈ 9.52
E4.56.	H4.56.	–	47.□.0	475	509	≈ 6.73	≈ 5.15	–
E4.56.	H4.56.	–	48.□.0	487	522	≈ 6.80	≈ 5.19	–
E4.56.	H4.56.	–	50.□.0	500	534	≈ 6.96	≈ 5.26	–
E4.56.	H4.56.	–	51.□.0	512	547	≈ 7.01	≈ 5.29	–
E4.56.	H4.56.	–	52.□.0	525	559	≈ 7.14	≈ 5.36	–
E4.56.	H4.56.	–	53.□.0	537	572	≈ 7.23	≈ 5.40	–
E4.56.	H4.56.	–	55.□.0	550	584	≈ 7.65	≈ 5.61	–
E4.56.	H4.56.	–	60.□.0	600	634	≈ 7.38	≈ 5.48	–

Available bend radii *R* [mm] | 100* | 135* | 150 | 175 | 200 | 240 | 250 | 300 | 350 | 400 | 450 | 500 |

*Radius not available for e-tubes. 1) Lid removable, non-openable

Order key

E4.56.15.150.0

Series / Type	Inner height	Width index	Bend radius	Colour index

Order example:
Complete Part No. with the required radius □. Example:
E4.56.15.150.0 = crossbars removable along the inner and outer radius
H4.56.15.150.0 = crossbars removable along the inner and outer radius
R4.56.15.150.0 = lids openable along the outer radius from one side
Order index for colour options ▶ **www.igus.eu/info-colours**

Unsupported applications | Short travels

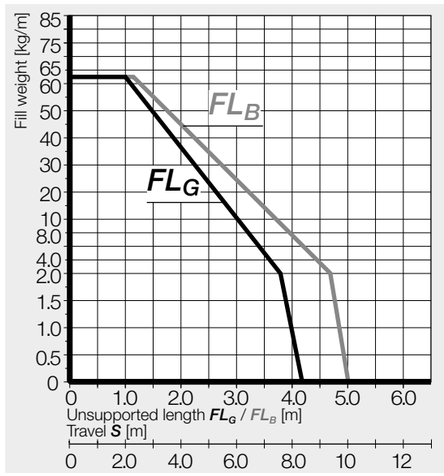

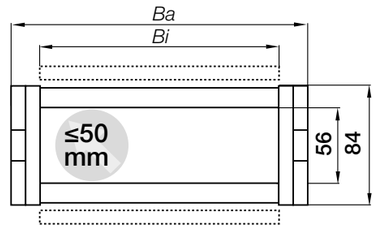

Inner height [mm]	56
Pitch [mm]	91
Links/m [pc.]	11
corresponds to [mm]	1,001
e-chain® length	$L_K = S/2 + K$

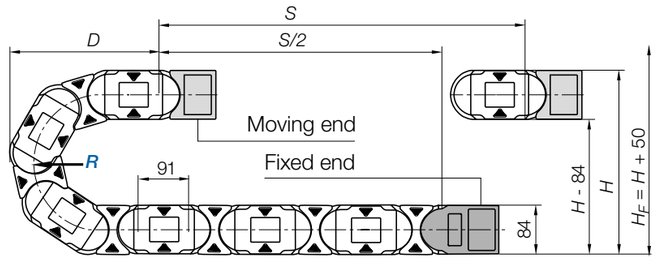

R	100*	135*	150	175	200	240	250	300	350	400	450	500
H_{+25}^{-0}	320	354	384	434	484	564	584	684	784	884	984	1,084
D	300	314	329	354	379	419	429	479	529	579	629	679
K	500	610	655	735	815	940	970	1,125	1,285	1,440	1,600	1.755

The required clearance height: $H_F = H + 50mm$ (with 3.0kg/m fill weight)

*Radius not available for e-tubes

Gliding applications | For travel lengths from 12m to max. 400m

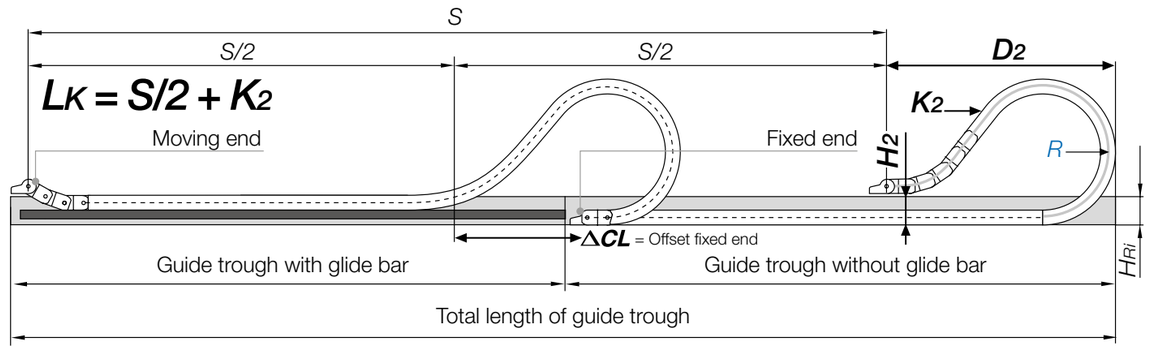

R	100*	135*	150	175	200	240	250	300	350	400	450	500
H_2	–	270	266	266	266	266	266	266	266	266	266	266
D_2^{+50}	–	268	450	580	710	900	980	1,180	1,440	1,530	1,700	1,850
K_2	–	610	819	1,092	1,274	1,547	1,638	2,002	2,275	2,548	2,912	3,276
ΔCL	–	–	159	259	359	509	559	709	909	959	1,059	1,159

Note: In case of travels between 10 and 12m we recommend an e-chain® with a longer unsupported length.

*Radius not available for e-tubes

Available from stock
Upon request

KMA mounting brackets | Attachment from any side | Pivoting | Locking

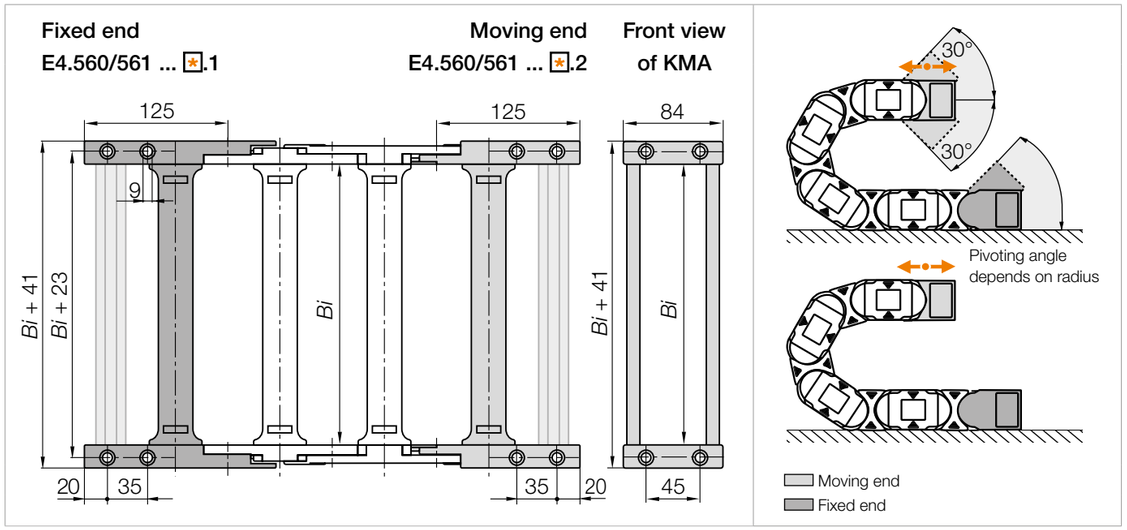

Width index	KMA full set		
	Part No. pivoting	Part No. locking	*Bi* [mm]
05.	E4.560.05. ✱.12.□	E4.561.05. ✱.12.□	50
055.	E4.560.055. ✱.12.□	E4.561.055. ✱.12.□	55
06.	E4.560.06. ✱.12.□	E4.561.06. ✱.12.□	65
07.	E4.560.07. ✱.12.□	E4.561.07. ✱.12.□	75
08.	E4.560.08. ✱.12.□	E4.561.08. ✱.12.□	87
10.	E4.560.10. ✱.12.□	E4.561.10. ✱.12.□	100
11.	E4.560.11. ✱.12.□	E4.561.11. ✱.12.□	112
12.	E4.560.12. ✱.12.□	E4.561.12. ✱.12.□	125
13.	E4.560.13. ✱.12.□	E4.561.13. ✱.12.□	137
15.	E4.560.15. ✱.12.□	E4.561.15. ✱.12.□	150
16.	E4.560.16. ✱.12.□	E4.561.16. ✱.12.□	162
169.	E4.560.169. ✱.12.□	E4.561.169. ✱.12.□	169
17.	E4.560.17. ✱.12.□	E4.561.17. ✱.12.□	175
182.	E4.560.182. ✱.12.□	E4.561.182. ✱.12.□	182
18.	E4.560.18. ✱.12.□	E4.561.18. ✱.12.□	187
20.	E4.560.20. ✱.12.□	E4.561.20. ✱.12.□	200
207.	E4.560.207. ✱.12.□	E4.561.207. ✱.12.□	207
21.	E4.560.21. ✱.12.□	E4.561.21. ✱.12.□	212
22.	E4.560.22. ✱.12.□	E4.561.22. ✱.12.□	225
23.	E4.560.23. ✱.12.□	E4.561.23. ✱.12.□	237
25.	E4.560.25. ✱.12.□	E4.561.25. ✱.12.□	250
26.	E4.560.26. ✱.12.□	E4.561.26. ✱.12.□	262
27.	E4.560.27. ✱.12.□	E4.561.27. ✱.12.□	275

Width index	KMA full set		
	Part No. pivoting	Part No. locking	*Bi* [mm]
28.	E4.560.28. ✱.12.□	E4.561.28. ✱.12.□	287
30.	E4.560.30. ✱.12.□	E4.561.30. ✱.12.□	300
31.	E4.560.31. ✱.12.□	E4.561.31. ✱.12.□	312
32.	E4.560.32. ✱.12.□	E4.561.32. ✱.12.□	325
33.	E4.560.33. ✱.12.□	E4.561.33. ✱.12.□	337
35.	E4.560.35. ✱.12.□	E4.561.35. ✱.12.□	350
36.	E4.560.36. ✱.12.□	E4.561.36. ✱.12.□	362
37.	E4.560.37. ✱.12.□	E4.561.37. ✱.12.□	375
38.	E4.560.38. ✱.12.□	E4.561.38. ✱.12.□	387
40.	E4.560.40. ✱.12.□	E4.561.40. ✱.12.□	400
41.	E4.560.41. ✱.12.□	E4.561.41. ✱.12.□	412
42.	E4.560.42. ✱.12.□	E4.561.42. ✱.12.□	425
43.	E4.560.43. ✱.12.□	E4.561.43. ✱.12.□	437
45.	E4.560.45. ✱.12.□	E4.561.45. ✱.12.□	450
46.	E4.560.46. ✱.12.□	E4.561.46. ✱.12.□	462
47.	E4.560.47. ✱.12.□	E4.561.47. ✱.12.□	475
48.	E4.560.48. ✱.12.□	E4.561.48. ✱.12.□	487
50.	E4.560.50. ✱.12.□	E4.561.50. ✱.12.□	500
51.	E4.560.51. ✱.12.□	E4.561.51. ✱.12.□	512
52.	E4.560.52. ✱.12.□	E4.561.52. ✱.12.□	525
53.	E4.560.53. ✱.12.□	E4.561.53. ✱.12.□	537
55.	E4.560.55. ✱.12.□	E4.561.55. ✱.12.□	550
60.	E4.560.60. ✱.12.□	E4.561.60. ✱.12.□	600

(KMA = polymer metal mounting bracket)

Available from stock
Upon request

KMA mounting brackets | Attachment from any side | Pivoting | Locking

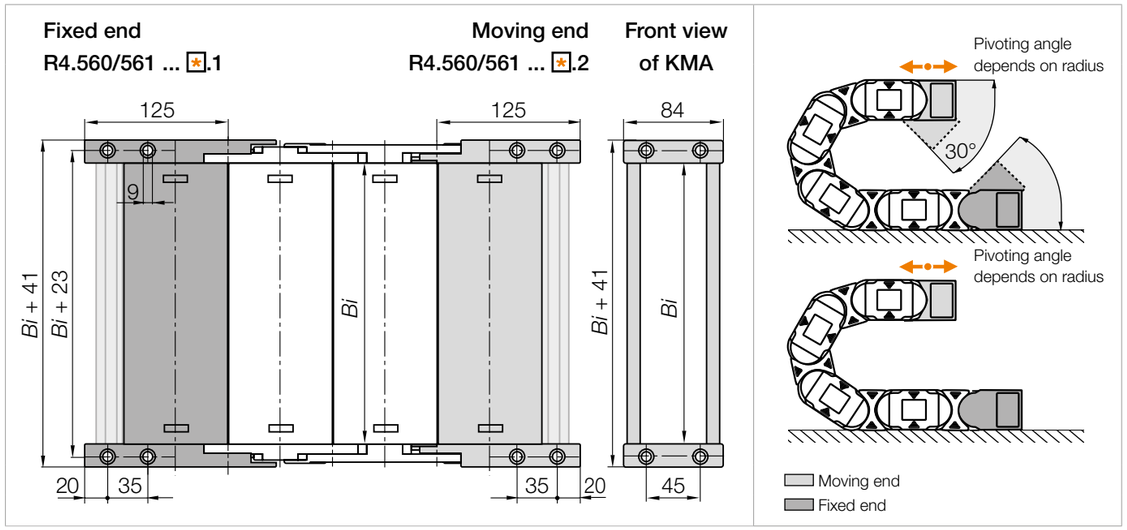

Width index	KMA full set		
	Part No. pivoting	Part No. locking	*Bi* [mm]
07.	R4.560.07. ✱.12.□	R4.561.07. ✱.12.□	75
10.	R4.560.10. ✱.12.□	R4.561.10. ✱.12.□	100
12.	R4.560.12. ✱.12.□	R4.561.12. ✱.12.□	112
15.	R4.560.15. ✱.12.□	R4.561.15. ✱.12.□	150
17.	R4.560.17. ✱.12.□	R4.561.17. ✱.12.□	175
20.	R4.560.20. ✱.12.□	R4.561.20. ✱.12.□	200

Width index	KMA full set		
	Part No. pivoting	Part No. locking	*Bi* [mm]
25.	R4.560.25. ✱.12.□	R4.561.25. ✱.12.□	250
27.	R4.560.27. ✱.12.□	R4.561.27. ✱.12.□	275
30.	R4.560.30. ✱.12.□	R4.561.30. ✱.12.□	300
35.	R4.560.35. ✱.12.□	R4.561.35. ✱.12.□	350
40.	R4.560.40. ✱.12.□	R4.561.40. ✱.12.□	400
46.	R4.560.46. ✱.12.□	R4.561.46. ✱.12.□	462

(KMA = polymer metal mounting bracket)

Note ✱: The e-chains® may end with either an inner or an outer side link. An outer side link should always be the first e-chain® link at the moving end. Please specify the index 1 (for odd) or 2 (for even) depending on an even or odd number of links required.

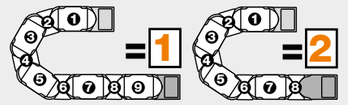

Order key

E4.560.15 .✱.12 .C.A2

Series	Width index	Even number of links	Full set	C-profile option	Pre-fitted

Note: Possible orientations for KMA mounting brackets. For mounting brackets pre-fitted **without strain relief**, please add index **.A**. For types pre-fitted **with strain relief** please add index **.A1**, **.A2**, **.A3** or **.A4**.



For the C-profile option please add index **.C**.

Available from stock
Upon request

Interior separation | Increase cable service life

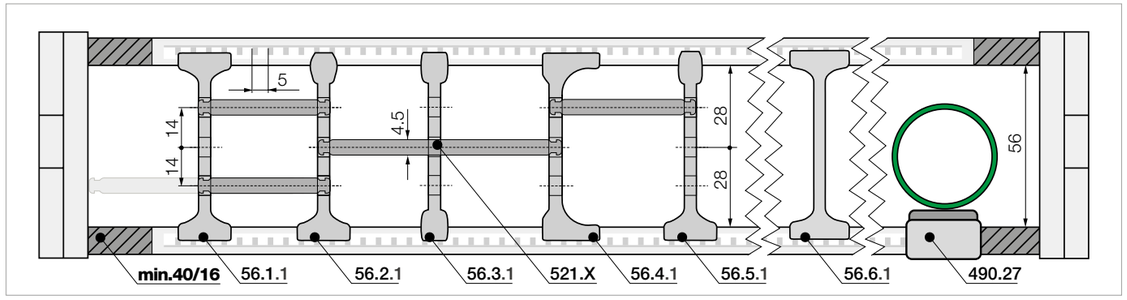

Note: Please be aware of the minimum lateral gap to the side links! **e-tube: 40mm**| **e-chain®: 16mm**
As standard separators are fitted every 2nd e-chain® link!



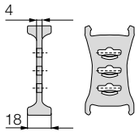

Part No.
Standard separator
unassembled **56.1**
assembled **56.1.1**

For all applications
Standard separator with a wide base for maximum holding force.



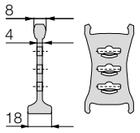

Part No. Separator, **narrow top**
unassembled **56.2**
assembled **56.2.1**

For even faster installation
Wide on one side for high holding force, narrow on opposite side for easy cable fitting.



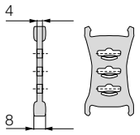

Part No.
Separator, narrow
unassembled **56.3**
assembled **56.3.1**

For a large number of thin cables
Separator with a narrow base for a large number of thin cables side by side. Saves space.



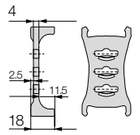

Part No.
Separator, asymmetrical
unassembled **56.4**
assembled **56.4.1**

For side-mounted applications
Asymmetrical separator, for defined gap distance. No additional spacers required.



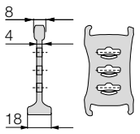

Part No.
Notch separator
unassembled **56.5**
assembled **56.5.1**

Locks securely in preset increments
Notch separator for exact positioning. Recommended for side-mounted applications.



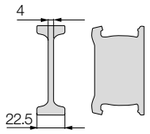

Part No.
Notch locking separator*
unassembled **56.6**
assembled **56.6.1**

Notch locking separator for increased holding force
For higher crossbar opening forces for high humidity and/ or large hydraulic hoses. They can be positioned precisely and then locked in position.

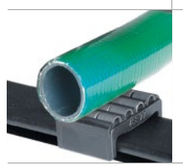

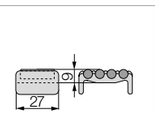

Part No.
Rollclip*
unassembled **489.27**
assembled **490.27**

Minimises abrasion of sensitive hoses
The rollclip simply clamps onto the opening crossbar. The movable rollers compensate for relative movement between the e-chain® and hose.

*Only suitable for e-chains®

E4.1 | Series E4.56 / H4.56 / R4.56

E4.56
H4.56
R4.56

Interior separation | To allow faster filling

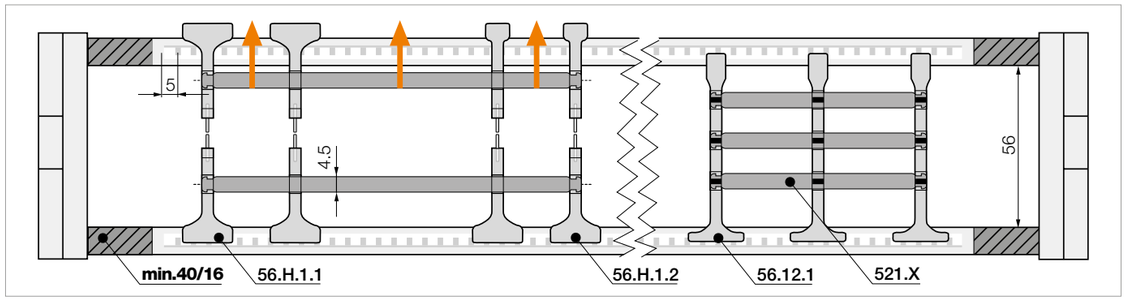

Note: Please be aware of the minimum lateral gap to the side links! **e-tube: 40mm**| **e-chain®: 16mm**
As standard separators are fitted every 2nd e-chain® link!



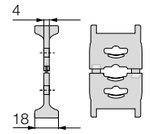

Part No.
Split separator, wide top
unassembled **56.H.1**
assembled **56.H.1.1**



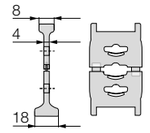

Part No.
Split separator, narrow top
unassembled **56.H.2**
assembled **56.H.2.1**

Split separators
In order to fill e-chains® more easily and effectively, these separators can be split in the middle. This allows easier access to middle shelf partitions. Fast assembly and easy retrofit. 2 types available: with wide or narrow top.



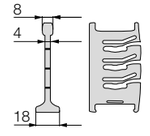

Part No.
Lean separator
unassembled **56.12**
assembled **56.12.1**

Lean separators[1)]
Quick fitting of shelves in several layers. Enables extremely fast replacement of individual cables in very full e-chains®. Only suitable for e-chains®.

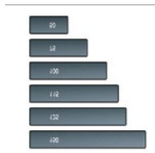

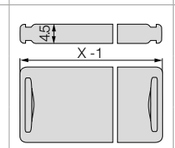

Part No.
Shelf
unassembled **520.X**
assembled **521.X**

Horizontal separation
Full-width shelf locks securely into separators at both ends, giving a fixed width. Can be used as full-width or modular shelving.

Width [mm]	Part No. unassembled	Part No. assembled	Width [mm]	Part No. unassembled	Part No. assembled	Width [mm]	Part No. unassembled	Part No. assembled	Width [mm]	Part No. unassembled	Part No. assembled
050	**520.050**	**521.050**	125	**520.125**	**521.125**	225	**520.225**	**521.225**	375	**520.375**	**521.375**
065	**520.065**	**521.065**	150	**520.150**	**521.150**	250	**520.250**	**521.250**	387	**520.387**	**521.387**
075	**520.075**	**521.075**	175	**520.175**	**521.175**	300	**520.300**	**521.300**	450	**520.450**	**521.450**
100	**520.100**	**521.100**	200	**520.200**	**521.200**	350	**520.350**	**521.350**			



Lean separator for even faster filling: quickly insert several layers of cables into the e-chain® and reduce the installation time by up to 50%. Measured on a 4m long e-chain® fitted with 12 cables. **1) Note: Please combine a maximum of four lean separators with one shelf. Not suitable for side-mounted e-chains®!**

Available from stock
Upon request

Product range

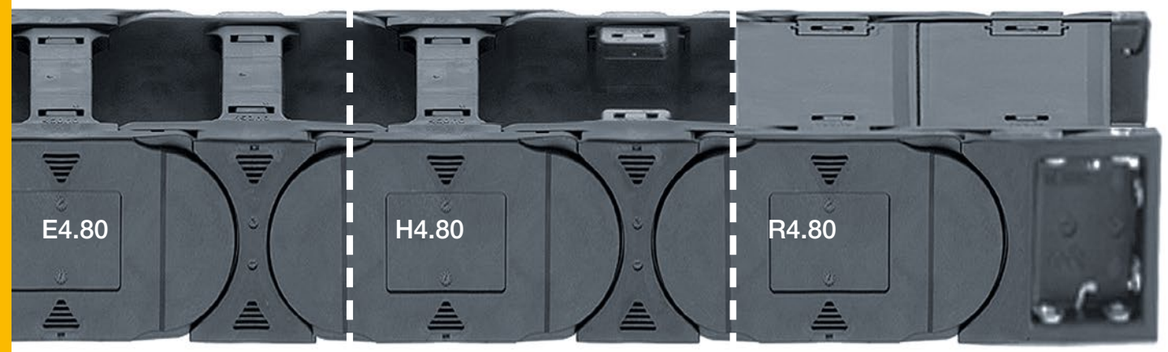

e-chains® with crossbars every link	e-chains® with crossbars every 2nd link	e-tubes closed		Bi [mm]	Ba [mm]	E4.80 [kg/m]	H4.80 [kg/m]	R4.80 [kg/m]
E4.80.	H4.80.	–	05.□.0	50	100	≈ 5.73	≈ 5.72	–
E4.80.	H4.80.	–	055.□.0	55	105	≈ 5.77	≈ 5.74	–
E4.80.	H4.80.	–	06.□.0	65	115	≈ 5.80	≈ 5.76	–
E4.80.	H4.80.	–	07.□.0	75	125	≈ 5.86	≈ 5.78	–
E4.80.	H4.80.	–	08.□.0	87	137	≈ 5.93	≈ 5.82	–
E4.80.	H4.80.	R4.80.	10.□.0	100	150	≈ 6.00	≈ 5.85	≈ 6.70
E4.80.	H4.80.	–	11.□.0	112	163	≈ 6.10	≈ 5.90	–
E4.80.	H4.80.	–	12.□.0	125	175	≈ 6.16	≈ 5.93	–
E4.80.	H4.80.	–	13.□.0	137	188	≈ 6.27	≈ 5.99	–
E4.80.	H4.80.	R4.80.	15.□.0	150	200	≈ 6.30	≈ 6.01	≈ 7.34
E4.80.	H4.80.	–	16.□.0	162	213	≈ 6.39	≈ 6.05	–
E4.80.	H4.80.	–	169.□.0	169	220	≈ 6.46	≈ 6.08	–
E4.80.	H4.80.	–	17.□.0	175	225	≈ 6.50	≈ 6.11	–
E4.80.	H4.80.	–	182.□.0	182	233	≈ 6.54	≈ 6.12	–
E4.80.	H4.80.	–	18.□.0	187	238	≈ 6.59	≈ 6.15	–
E4.80.	H4.80.	R4.80.	20.□.0	200	250	≈ 6.64	≈ 6.17	≈ 8.09
E4.80.	H4.80.	–	207.□.0	207	258	≈ 6.68	≈ 6.20	–
E4.80.	H4.80.	–	21.□.0	212	263	≈ 6.70	≈ 6.20	–
E4.80.	H4.80.	–	22.□.0	225	275	≈ 6.76	≈ 6.23	–
E4.80.	H4.80.	–	23.□.0	237	288	≈ 6.84	≈ 6.28	–
E4.80.	H4.80.	R4.80.	25.□.0	250	300	≈ 6.94	≈ 6.32	≈ 8.47
E4.80.	H4.80.	–	26.□.0	262	313	≈ 7.01	≈ 6.36	–
E4.80.	H4.80.	–	27.□.0	275	325	≈ 7.09	≈ 6.40	–

e-chains® with crossbars every link	e-chains® with crossbars every 2nd link	e-tubes closed		Bi [mm]	Ba [mm]	E4.80 [kg/m]	H4.80 [kg/m]	R4.80 [kg/m]
E4.80.	H4.80.	–	28.□.0	287	338	≈ 7.14	≈ 6.42	–
E4.80.	H4.80.	R4.80.	30.□.0	300	350	≈ 7.27	≈ 6.49	≈ 9.22
E4.80.	H4.80.	–	31.□.0	312	363	≈ 7.30	≈ 6.50	–
E4.80.	H4.80.	–	32.□.0	325	375	≈ 7.38	≈ 6.54	–
E4.80.	H4.80.	–	33.□.0	337	388	≈ 7.48	≈ 6.59	–
E4.80.	H4.80.	R4.80.	35.□.0	350	400	≈ 7.59	≈ 6.65	≈ 9.90
E4.80.	H4.80.	–	36.□.0	362	413	≈ 7.61	≈ 6.66	–
E4.80.	H4.80.	–	37.□.0	375	425	≈ 7.71	≈ 6.71	–
E4.80.	H4.80.	–	38.□.0	387	438	≈ 7.74	≈ 6.73	–
E4.80.	H4.80.	R4.80.	40.□.0	400	450	≈ 7.84	≈ 6.77	≈ 10.52
E4.80.	H4.80.	–	41.□.0	412	463	≈ 7.90	≈ 6.80	–
E4.80.	H4.80.	–	42.□.0	425	475	≈ 8.00	≈ 6.85	–
E4.80.	H4.80.	–	43.□.0	437	488	≈ 8.07	≈ 6.89	–
E4.80.	H4.80.	–	45.□.0	450	500	≈ 8.23	≈ 6.97	–
E4.80.	H4.80.	R4.80.	46.□.0	462	513	≈ 8.26	≈ 6.99	≈ 11.33
E4.80.	H4.80.	–	47.□.0	475	525	≈ 8.29	≈ 7.00	–
E4.80.	H4.80.	–	48.□.0	487	538	≈ 8.35	≈ 7.03	–
E4.80.	H4.80.	–	50.□.0	500	550	≈ 8.48	≈ 7.09	–
E4.80.	H4.80.	–	51.□.0	512	563	≈ 8.52	≈ 7.11	–
E4.80.	H4.80.	–	52.□.0	525	575	≈ 8.63	≈ 7.17	–
E4.80.	H4.80.	–	53.□.0	537	588	≈ 8.70	≈ 7.21	–
E4.80.	H4.80.	–	55.□.0	550	600	≈ 9.05	≈ 7.38	–
E4.80.	H4.80.	–	60.□.0	600	650	≈ 9.23	≈ 7.47	–

Available bend radii *R* [mm] | 150* | 200 | 250 | 300 | 350 | 400 | 500 | 550 | 600 | 1.000 |

* Radius not available for e-tubes.

Order key

E4.80.15.200.0

Series / Type	Inner height	Width index	Bend radius	Colour index
E4.80.	15.		200.	0

Order example:
Complete Part No. with the required radius □. Example:
E4.80.15.200.0 = crossbars removable along the inner and outer radius
H4.80.15.200.0 = crossbars removable along the inner and outer radius
R4.80.15.200.0 = lids openable along the outer radius from one side
Order index for colour options ▶ **www.igus.eu/info-colours**

E4.1 | Series E4.80 / H4.80 / R4.80

E4.80
H4.80
R4.80

Unsupported applications | Short travels

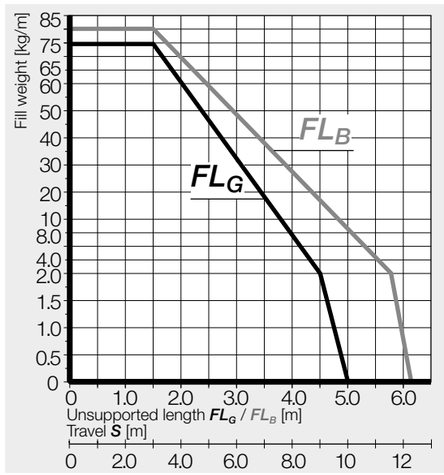

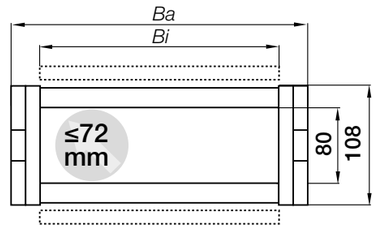

Inner height [mm]	80
Pitch [mm]	111
Links/m [pc.]	9
corresponds to [mm]	999
e-chain® length	$L_K = S/2 + K$

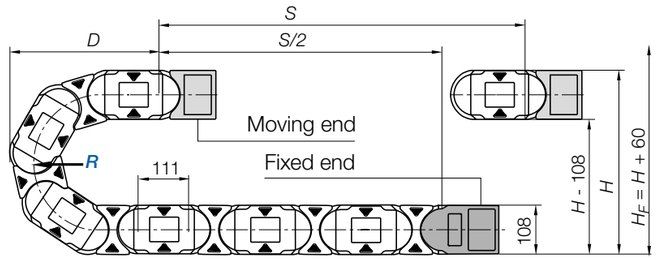

R	150*	200	250	300	350	400	500	550	600	1,000
H $^{0}_{+25}$	408	508	608	708	808	908	1,108	1,208	1.308	2,108
D	371	421	471	521	571	621	721	771	821	1,221
K	695	855	1,010	1,165	1,325	1,480	1,795	1,950	2,110	3,365

The required clearance height: $H_F = H + 60mm$ (with 3.0kg/m fill weight)

*Radius not available for e-tubes

Gliding applications | For travel lengths from 12m to max. 400m

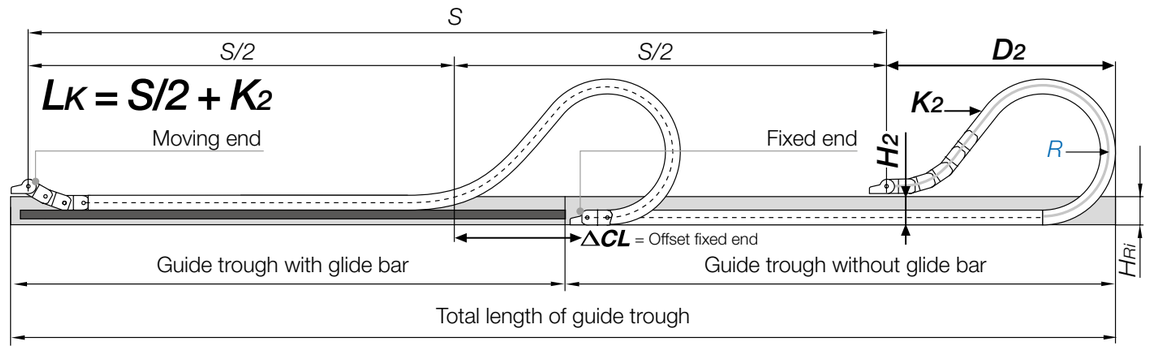

R	150*	200	250	300	350	400	500	550	600	1,000
H_2	242	242	242	242	242	242	242	–	–	–
D_2^{+50}	550	800	1,000	1,200	1,450	1,600	2,100	–	–	–
K_2	890	1,330	1,665	2,000	2,330	2,660	3,440	–	–	–
ΔCL	189	389	539	689	889	989	1,389	–	–	–

Note: In case of travels between 10 and 12m we recommend an e-chain® with a longer unsupported length.

*Radius not available for e-tubes

Available from stock
Upon request

E4.1 e-chains® | Series E4.80 / H4.80

KMA mounting brackets | Attachment from any side | Pivoting | Locking

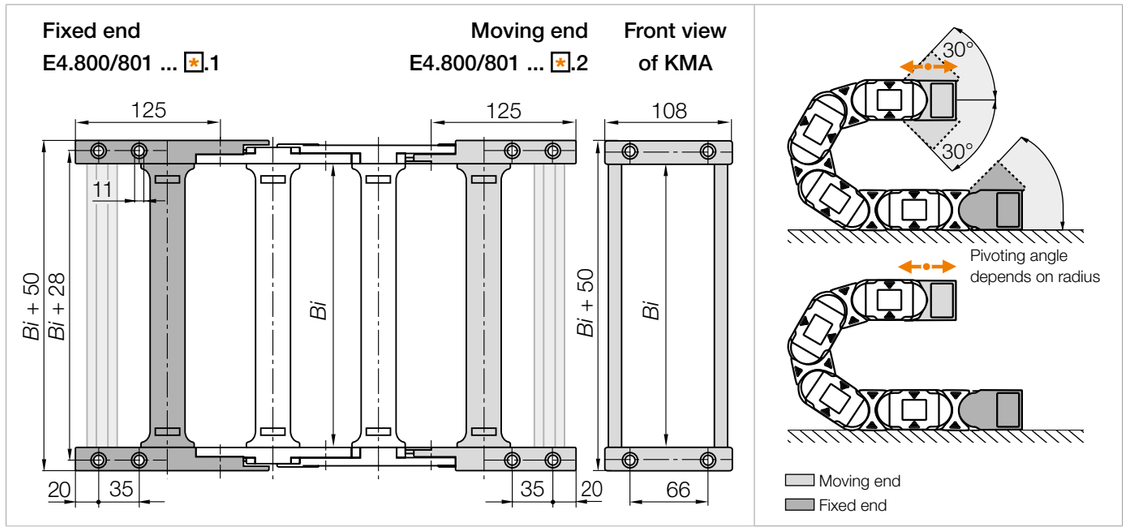

Width index	KMA full set		
	Part No. pivoting	Part No. locking	*Bi* [mm]
05.	E4.800.05. ✱.12.□	E4.801.05. ✱.12.□	50
055.	E4.800.055. ✱.12.□	E4.801.055. ✱.12.□	55
06.	E4.800.06. ✱.12.□	E4.801.06. ✱.12.□	65
07.	E4.800.07. ✱.12.□	E4.801.07. ✱.12.□	75
08.	E4.800.08. ✱.12.□	E4.801.08. ✱.12.□	87
10.	E4.800.10. ✱.12.□	E4.801.10. ✱.12.□	100
11.	E4.800.11. ✱.12.□	E4.801.11. ✱.12.□	112
12.	E4.800.12. ✱.12.□	E4.801.12. ✱.12.□	125
13.	E4.800.13. ✱.12.□	E4.801.13. ✱.12.□	137
15.	E4.800.15. ✱.12.□	E4.801.15. ✱.12.□	150
16.	E4.800.16. ✱.12.□	E4.801.16. ✱.12.□	162
169.	E4.800.169. ✱.12.□	E4.801.169. ✱.12.□	169
17.	E4.800.17. ✱.12.□	E4.801.17. ✱.12.□	175
182.	E4.800.182. ✱.12.□	E4.801.182. ✱.12.□	182
18.	E4.800.18. ✱.12.□	E4.801.18. ✱.12.□	187
20.	E4.800.20. ✱.12.□	E4.801.20. ✱.12.□	200
207.	E4.800.207. ✱.12.□	E4.801.207. ✱.12.□	207
21.	E4.800.21. ✱.12.□	E4.801.21. ✱.12.□	212
22.	E4.800.22. ✱.12.□	E4.801.22. ✱.12.□	225
23.	E4.800.23. ✱.12.□	E4.801.23. ✱.12.□	237
25.	E4.800.25. ✱.12.□	E4.801.25. ✱.12.□	250
26.	E4.800.26. ✱.12.□	E4.801.26. ✱.12.□	262
27.	E4.800.27. ✱.12.□	E4.801.27. ✱.12.□	275

Width index	KMA full set		
	Part No. pivoting	Part No. locking	*Bi* [mm]
28.	E4.800.28. ✱.12.□	E4.801.28. ✱.12.□	287
30.	E4.800.30. ✱.12.□	E4.801.30. ✱.12.□	300
31.	E4.800.31. ✱.12.□	E4.801.31. ✱.12.□	312
32.	E4.800.32. ✱.12.□	E4.801.32. ✱.12.□	325
33.	E4.800.33. ✱.12.□	E4.801.33. ✱.12.□	337
35.	E4.800.35. ✱.12.□	E4.801.35. ✱.12.□	350
36.	E4.800.36. ✱.12.□	E4.801.36. ✱.12.□	362
37.	E4.800.37. ✱.12.□	E4.801.37. ✱.12.□	375
38.	E4.800.38. ✱.12.□	E4.801.38. ✱.12.□	387
40.	E4.800.40. ✱.12.□	E4.801.40. ✱.12.□	400
41.	E4.800.41. ✱.12.□	E4.801.41. ✱.12.□	412
42.	E4.800.42. ✱.12.□	E4.801.42. ✱.12.□	425
43.	E4.800.43. ✱.12.□	E4.801.43. ✱.12.□	437
45.	E4.800.45. ✱.12.□	E4.801.45. ✱.12.□	450
46.	E4.800.46. ✱.12.□	E4.801.46. ✱.12.□	462
47.	E4.800.47. ✱.12.□	E4.801.47. ✱.12.□	475
48.	E4.800.48. ✱.12.□	E4.801.48. ✱.12.□	487
50.	E4.800.50. ✱.12.□	E4.801.50. ✱.12.□	500
51.	E4.800.51. ✱.12.□	E4.801.51. ✱.12.□	512
52.	E4.800.52. ✱.12.□	E4.801.52. ✱.12.□	525
53.	E4.800.53. ✱.12.□	E4.801.53. ✱.12.□	537
55.	E4.800.55. ✱.12.□	E4.801.55. ✱.12.□	550
60.	E4.800.60. ✱.12.□	E4.801.60. ✱.12.□	600

(KMA = polymer metal mounting bracket)

Available from stock
Upon request

E4.1 e-tubes | Series R4.80

KMA mounting brackets | Attachment from any side | Pivoting | Locking

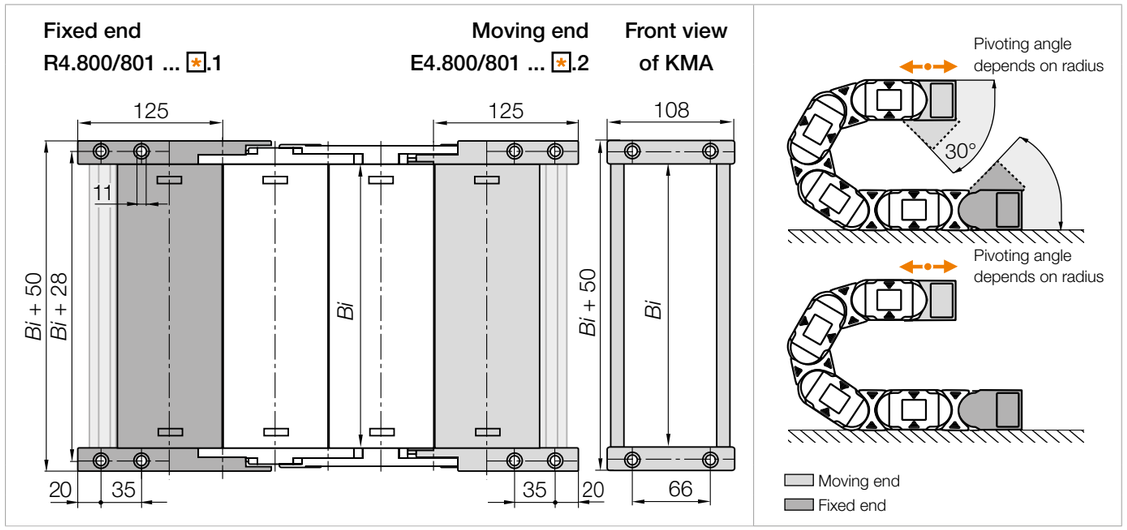

Width index	KMA full set		
	Part No. pivoting	Part No. locking	*Bi* [mm]
10.	R4.800.10. ✱.12.□	R4.801.10. ✱.12.□	100
15.	R4.800.15. ✱.12.□	R4.801.15. ✱.12.□	150
20.	R4.800.20. ✱.12.□	R4.801.20. ✱.12.□	200
25.	R4.800.25. ✱.12.□	R4.801.25. ✱.12.□	250

Width index	KMA full set		
	Part No. pivoting	Part No. locking	*Bi* [mm]
30.	R4.800.30. ✱.12.□	R4.801.30. ✱.12.□	300
35.	R4.800.35. ✱.12.□	R4.801.35. ✱.12.□	350
40.	R4.800.40. ✱.12.□	R4.801.40. ✱.12.□	400
46.	R4.800.46. ✱.12.□	R4.801.46. ✱.12.□	462

(KMA = polymer metal mounting bracket)

Note ✱: The e-chains® may end with either an inner or an outer side link. An outer side link should always be the first e-chain® link at the moving end. Please specify the index 1 (for odd) or 2 (for even) depending on an even or odd number of links required.

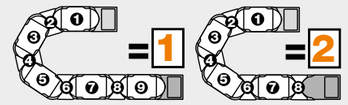

Order key

E4.800.15 .✱.12 .C .A2

Series	Width index	Even number of links	Full set	C-profile option	Pre-fitted

Note: Possible orientations for KMA mounting brackets. For mounting brackets pre-fitted **without strain relief**, please add index **.A**. For types pre-fitted **with strain relief** please add index **.A1**, **.A2**, **.A3** or **.A4**.



For the C-profile option please add index **.C**.

Available from stock
Upon request

E4.1 | Series E4.80 / H4.80 / R4.80

Interior separation | Increase cable service life

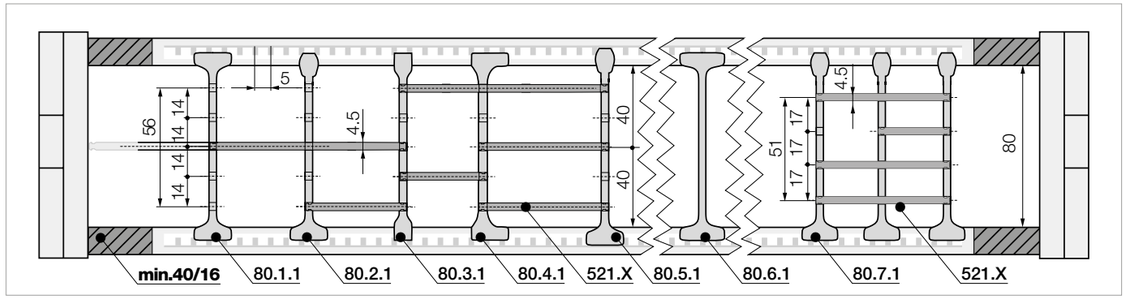

Note: Please be aware of the minimum lateral gap to the side links! **e-tube: 40mm**| **e-chain®: 16mm**
As standard separators are fitted every 2nd e-chain® link!


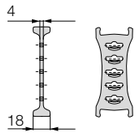

Part No. Standard separator	
unassembled	**80.1**
assembled	**80.1.1**

For all applications
Standard separator with a wide base for maximum holding force.


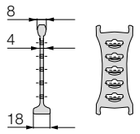

Part No. Separator, narrow top	
unassembled	**80.2**
assembled	**80.2.1**

For even faster installation
Wide on one side for high holding force, narrow on opposite side for easy cable fitting.

Part No. Separator, narrow	
unassembled	**80.3**
assembled	**80.3.1**

For a large number of thin cables
Separator with a narrow base for a large number of thin cables side by side. Saves space.


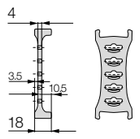

Part No. Separator, asymmetrical	
unassembled	**80.4**
assembled	**80.4.1**

For side-mounted applications
Asymmetrical separator, for defined gap distance. No additional spacers required.


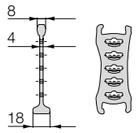

Part No. Notch separator	
unassembled	**80.5**
assembled	**80.5.1**

Locks securely in preset increments
Notch separator for exact positioning. Recommended for side-mounted applications.


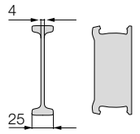

Part No. Notch locking separator*	
unassembled	**80.6**
assembled	**80.6.1**

Notch locking separator for increased holding force
For higher crossbar opening forces for high humidity and/or large hydraulic hoses. They can be positioned precisely and then locked in position.


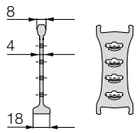

Part No. Separator, one end locking	
unassembled	**80.7**
assembled	**80.7.1**

Separator, one end locking
Offset slots for more variability in horizontal subdivisions.

*Only suitable for e-chains®

E4.1 | Series E4.80 / H4.80 / R4.80

E4.80
H4.80
R4.80

Interior separation | To allow faster filling

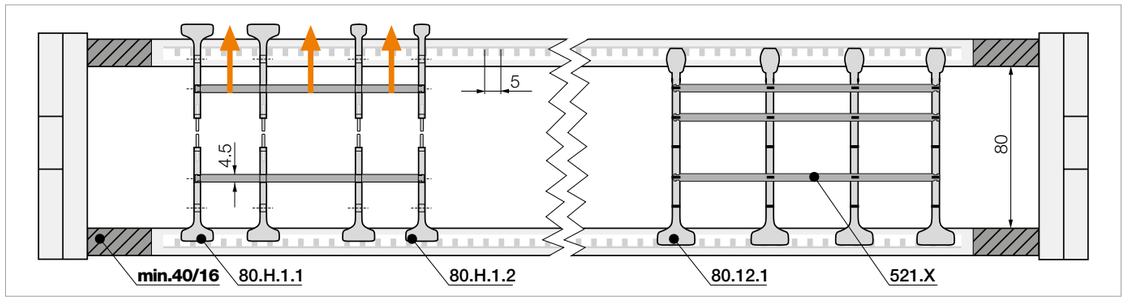

Note: Please be aware of the minimum lateral gap to the side links! **e-tube: 40mm**| **e-chain®: 16mm**
As standard separators are fitted every 2nd e-chain® link!


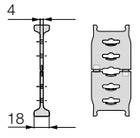

Part No. Split separator, wide top	
unassembled	**80.H.1**
assembled	**80.H.1.1**


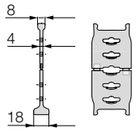

Part No. Split separator, narrow top	
unassembled	**80.H.2**
assembled	**80.H.2.1**

Split separators
In order to fill e-chains® more easily and effectively, these separators can be split in the middle. This allows easier access to middle shelf partitions. Fast assembly and easy retrofit. 2 types available: with wide or narrow top.


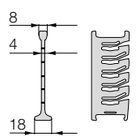

Part No. Lean separator	
unassembled	**80.12**
assembled	**80.12.1**

Lean separators[1)]
Quick fitting of shelves in several layers. Enables extremely fast replacement of individual cables in very full e-chains®. Only suitable for e-chains®.


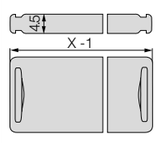

Part No. Shelf	
unassembled	**520.X**
assembled	**521.X**

Horizontal separation
Full-width shelf locks securely into separators at both ends, giving a fixed width. Can be used as full-width or modular shelving.

Width [mm]	Part No. unassembled	Part No. assembled
050	**520.050**	**521.050**
065	**520.065**	**521.065**
075	**520.075**	**521.075**
100	**520.100**	**521.100**

Width [mm]	Part No. unassembled	Part No. assembled
125	**520.125**	**521.125**
150	**520.150**	**521.150**
175	**520.175**	**521.175**
200	**520.200**	**521.200**

Width [mm]	Part No. unassembled	Part No. assembled
225	**520.225**	**521.225**
250	**520.250**	**521.250**
300	**520.300**	**521.300**
350	**520.350**	**521.350**

Width [mm]	Part No. unassembled	Part No. assembled
375	**520.375**	**521.375**
387	**520.387**	**521.387**
450	**520.450**	**521.450**



Lean separator for even faster filling: quickly insert several layers of cables into the e-chain® and reduce the installation time by up to 50%. Measured on a 4m long e-chain® fitted with 12 cables. **1) Note: Please combine a maximum of four lean separators with one shelf. Not suitable for side-mounted e-chains®!**

Available from stock
Upon request

Product range

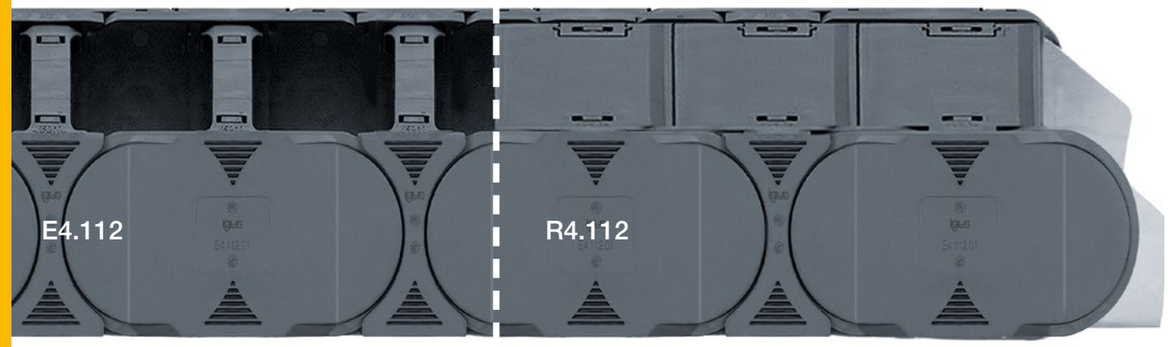

Part No. e-chains® with crossbars every link	Part No. e-tubes closed	*Bi* [mm]	*Ba* [mm]	E4.112 [kg/m]	R4.112 [kg/m]
E4.112. 05.□.0	–	50	102	≈ 7.78	–
E4.112.055.□.0	–	55	107	≈ 7.81	–
E4.112. 06.□.0	–	65	117	≈ 7.84	–
E4.112. 07.□.0	–	75	127	≈ 7.88	–
E4.112. 08.□.0	–	87	139	≈ 7.94	–
E4.112. 10.□.0	–	100	152	≈ 7.99	–
E4.112. 11.□.0	–	112	164	≈ 8.07	–
E4.112. 12.□.0	–	125	177	≈ 8.12	–
E4.112. 13.□.0	–	137	189	≈ 8.20	–
E4.112. 15.□.0	–	150	202	≈ 8.23	–
E4.112. 16.□.0	–	162	214	≈ 8.30	–
E4.112.169.□.0	–	169	222	≈ 8.35	–
E4.112. 17.□.0	–	175	227	≈ 8.38	–
E4.112.182.□.0	–	182	235	≈ 8.41	–
E4.112. 18.□.0	–	187	239	≈ 8.45	–
E4.112. 20.□.0	R4.112.20.□.0	200	252	≈ 8.49	≈ 10.15
E4.112.207.□.0	–	207	260	≈ 8.52	–
E4.112. 21.□.0	–	212	264	≈ 8.53	–
E4.112. 22.□.0	–	225	277	≈ 8.58	–
E4.112. 23.□.0	–	237	289	≈ 8.65	–
E4.112. 25.□.0	R4.112.25.□.0	250	302	≈ 8.72	≈ 10.79
E4.112. 26.□.0	–	262	314	≈ 8.78	–
E4.112. 27.□.0	–	275	327	≈ 8.84	–

Part No. e-chains® with crossbars every link	Part No. e-tubes closed	*Bi* [mm]	*Ba* [mm]	E4.112 [kg/m]	R4.112 [kg/m]
E4.112. 28.□.0	–	287	339	≈ 8.88	–
E4.112. 30.□.0	R4.112.30.□.0	300	352	≈ 8.97	≈ 11.42
E4.112. 31.□.0	–	312	364	≈ 9.00	–
E4.112. 32.□.0	–	325	377	≈ 9.06	–
E4.112. 33.□.0	–	337	389	≈ 9.14	–
E4.112. 35.□.0	R4.112.35.□.0	350	402	≈ 9.27	≈ 12.07
E4.112. 36.□.0	–	362	414	≈ 9.21	–
E4.112. 37.□.0	–	375	427	≈ 9.27	–
E4.112. 38.□.0	–	387	439	≈ 9.35	–
E4.112. 40.□.0	R4.112.40.□.0	400	452	≈ 9.52	≈ 12.71
E4.112. 41.□.0	–	412	464	≈ 9.47	–
E4.112. 42.□.0	–	425	477	≈ 9.66	–
E4.112. 43.□.0	–	437	489	≈ 9.56	–
E4.112. 45.□.0	–	450	502	≈ 9.77	–
E4.112. 46.□.0	–	462	514	≈ 9.74	–
E4.112. 47.□.0	–	475	527	≈ 9.76	–
E4.112. 48.□.0	–	487	539	≈ 9.92	–
E4.112. 50.□.0	R4.112.50.□.0	500	552	≈ 9.98	≈ 13.99
E4.112. 51.□.0	–	512	564	≈ 9.92	–
E4.112. 52.□.0	–	525	577	≈ 10.03	–
E4.112. 53.□.0	–	537	589	≈ 10.09	–
E4.112. 55.□.0	–	550	602	≈ 10.36	–
E4.112. 60.□.0	–	600	652	≈ 10.51	–

Available bend radii *R* [mm] | 200* | 250**| 300**| 350 | 400 | 450 | 500 | 550 | 600 | 750 | 1.000 |

*Radius not available for e-tubes **Radius available for e-tubes with technical limitations, upon request

Order key

E4.112.20.500.0

Series / Type	Inner height	Width index	Bend radius	Colour index

Order example:
Complete Part No. with the required radius □. Example:
E4.112.20.500.0 = crossbars removable along the inner and outer radius
R4.112.20.500.0 = lids openable along the outer radius from one side
Order index for colour options ▶ **www.igus.eu/info-colours**

Unsupported applications | Short travels

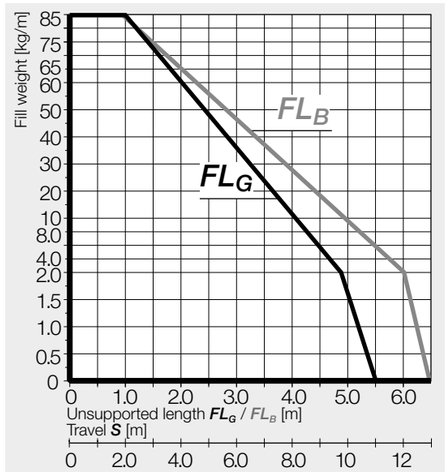

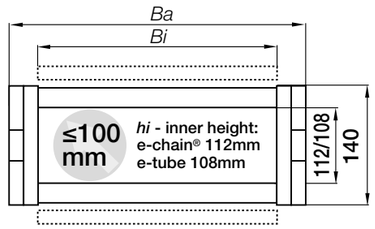

E4.112 inner height [mm]	112
R4.112 inner height [mm]	108
Pitch [mm]	143
Links/m [pc.]	7
corresponds to [mm]	1,001
e-chain® length	$L_K = S/2 + K$

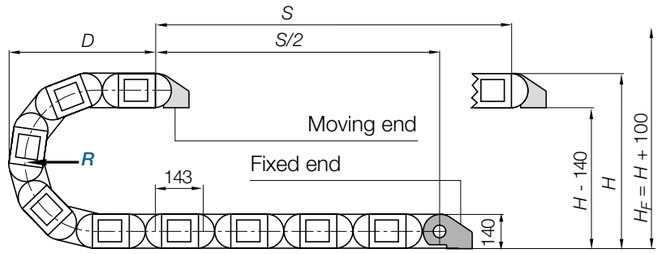

R	200*	250**	300**	350	400	450	500	550	600	750	1,000
H	545	645	745	845	945	1,045	1,145	1,245	1,345	1,645	2,145
D	415	465	515	565	615	665	715	765	815	965	1,215
K	915	1,075	1,230	1,390	1,545	1,700	1,860	2,015	2,175	2,645	3,430

The required clearance height: $H_F = H + 100$mm (with 5.0kg/m fill weight)

*Radius not available for e-tubes **Radius available for e-tubes with technical limitations, upon request

Gliding applications | For travel lengths from 14m to max. 450m

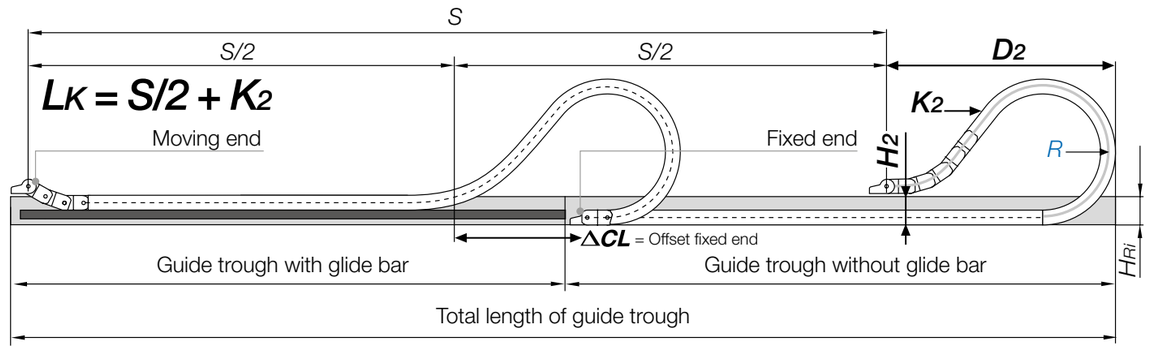

R	200*	250**	300**	350	400	450	500	550	600	750	1,000
H_2	325	325	325	325	325	325	325	325	325	–	–
D_2^{+50}	900	1,000	1,100	1,250	1,450	1,600	1,700	1,900	2,050	–	–
K_2	1,573	1,716	1,859	2,288	2,574	2,860	3,146	3,432	3,861	–	–
ΔCL	450	500	550	650	800	900	950	1,100	1,200	–	–

Note: In case of travels between 11 and 14m we recommend an e-chain® with a longer unsupported length.

*Radius not available for e-tubes **Radius available for e-tubes with technical limitations, upon request

Available from stock
Upon request

Steel mounting brackets | Attachment from any side | Pivoting | Locking

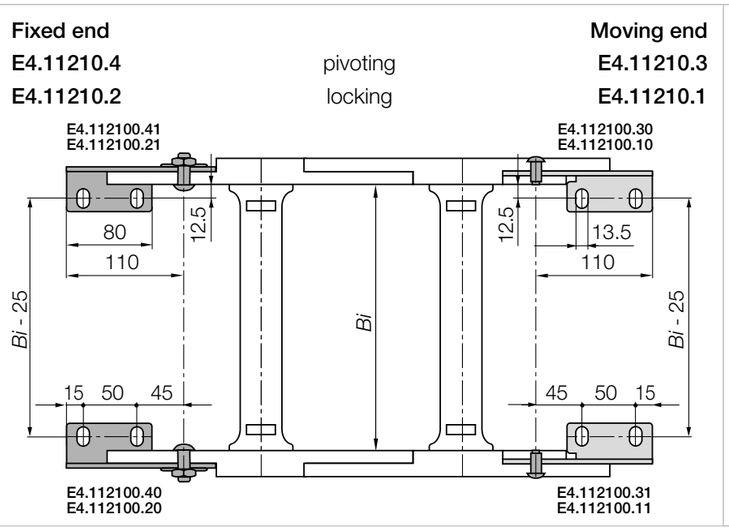

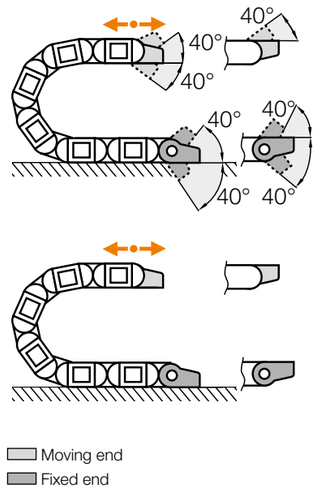

Part No. Full set	Part No. Full set	
Steel	Steel	Description
pivoting	locking	Mounting bracket
E4.11210.1.34.VS.E45	E4.11210.1.12.VS.E45	Full set (both ends) ending with outer side link, screwed - standard
E4.11210.2.34.VS.E45	E4.11210.2.12.VS.E45	Full set (both ends) beginning with outer side link (moving end) - ending with inner side link (fixed end), screwed - standard

Stainless steel version available. Please add index **.E45** (material: AISI 316Ti)

Note: The e-chains® may end with either an inner or an outer side link. An outer side link should always be the first e-chain® link at the moving end. Please specify the index 1 (for odd) or 2 (for even) depending on an even or odd number of links required. For the best appearance, make sure the e-chain® ends with 1 outer side links whenever possible (with odd number of links).

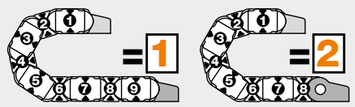

Order key

E4.11210.1.12 .VS.A2

Series	Odd number of links	Full set, locking	Pre-fitted	Pre-fitted

Note: Possible variations for pre-fitted mounting brackets. To receive steel mounting brackets pre-fitted please add index **.A1**, **.A2**, **.A3** or **.A4**.

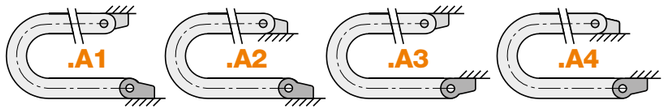

Available from stock
Upon request

Interior separation | Increase cable service life

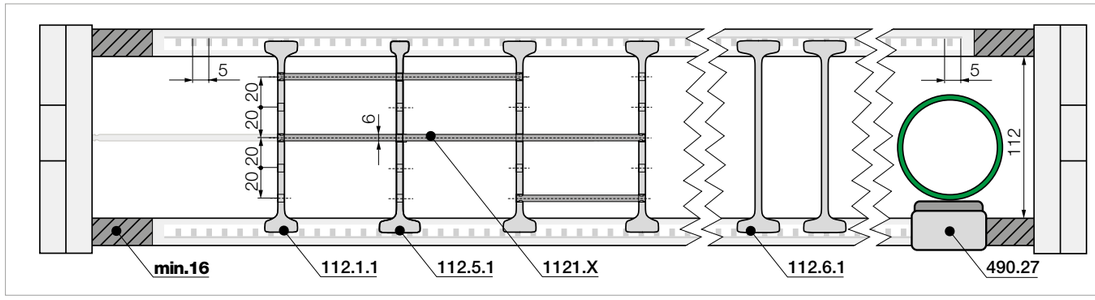

Note: Please be aware of the minimum lateral gap to the side links! **e-chain®: =16mm**
As standard separators are fitted every 2nd e-chain® link!

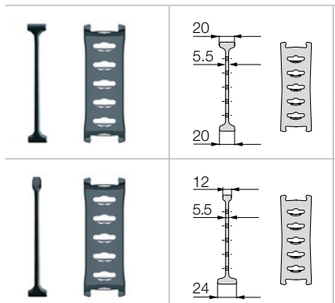

Part No. Standard separator
unassembled **112.1**
assembled **112.1.1**

For all applications
Standard separator with a wide base for maximum holding force.

Part No. Notch separator
unassembled **112.5**
assembled **112.5.1**

Locks securely in preset increments
Notch separator for exact positioning. Recommended for side-mounted applications.

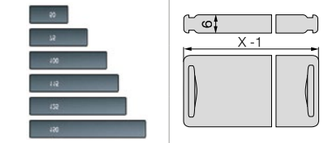

Part No. Shelf
unassembled **1120.X**
assembled **1121.X**

Horizontal separation
Full-width shelf locks securely into separators at both ends, giving a fixed width. Can be used as full-width or modular shelving.

Width [mm]	Part No. unassembled	Part No. assembled	Width [mm]	Part No. unassembled	Part No. assembled	Width [mm]	Part No. unassembled	Part No. assembled	Width [mm]	Part No. unassembled	Part No. assembled
050	**1120.050**	**1121.050**	125	**1120.125**	**1121.125**	225	**1120.225**	**1121.225**	375	**1120.375**	**1121.375**
065	**1120.065**	**1121.065**	150	**1120.150**	**1121.150**	250	**1120.250**	**1121.250**	387	**1120.387**	**1121.387**
075	**1120.075**	**1121.075**	175	**1120.175**	**1121.175**	300	**1120.300**	**1121.300**	450	**1120.450**	**1121.450**
100	**1120.100**	**1121.100**	200	**1120.200**	**1121.200**	350	**1120.350**	**1121.350**			

Interior separation | Other optional elements

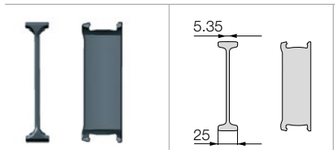

Part No. Notch locking separator
unassembled **112.6**
assembled **112.6.1**

Notch locking separator for increased holding force
For higher crossbar opening forces for high humidity and/or large hydraulic hoses. They can be positioned precisely and then locked in position.

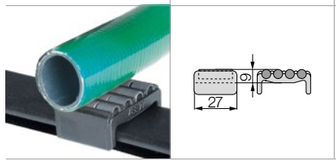

Part No. Rollclip
unassembled **489.27**
assembled **490.27**

Minimises abrasion of sensitive hoses
The rollclip simply clamps onto the opening crossbar. The movable rollers compensate for relative movement between the e-chain® and hose.

All interior separations on this page are only suitable for e-chains®!

Interior separation | Increase cable service life

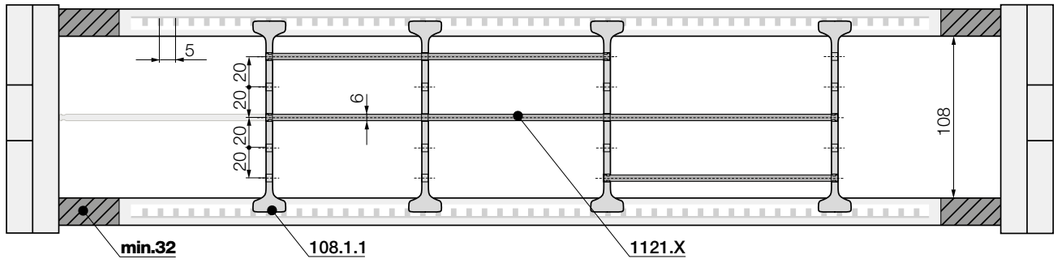

Note: Please be aware of the minimum lateral gap to the side links! **e-tubes: 32mm**
As standard separators are fitted every 2nd e-chain® link!



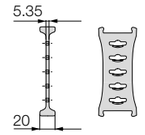

Part No.	
Standard separator	
unassembled	**108.1**
assembled	**108.1.1**

For all applications

Standard separator with a wide base for maximum holding force.

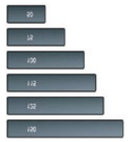

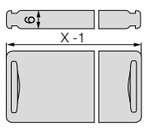

Part No.	
Shelf	
unassembled	**1120.X**
assembled	**1121.X**

Horizontal separation

Full-width shelf locks securely into separators at both ends, giving a fixed width. Can be used as full-width or modular shelving.

Width [mm]	Part No. unassembled	Part No. assembled
050	**1120.050**	**1121.050**
065	**1120.065**	**1121.065**
075	**1120.075**	**1121.075**
100	**1120.100**	**1121.100**

Width [mm]	Part No. unassembled	Part No. assembled
125	**1120.125**	**1121.125**
150	**1120.150**	**1121.150**
175	**1120.175**	**1121.175**
200	**1120.200**	**1121.200**

Width [mm]	Part No. unassembled	Part No. assembled
225	**1120.225**	**1121.225**
250	**1120.250**	**1121.250**
300	**1120.300**	**1121.300**
350	**1120.350**	**1121.350**

Width [mm]	Part No. unassembled	Part No. assembled
375	**1120.375**	**1121.375**
387	**1120.387**	**1121.387**
450	**1120.450**	**1121.450**

All interior separations on this page are only suitable for e-tubes!

Available from stock
Upon request

Interior separation | To allow faster filling

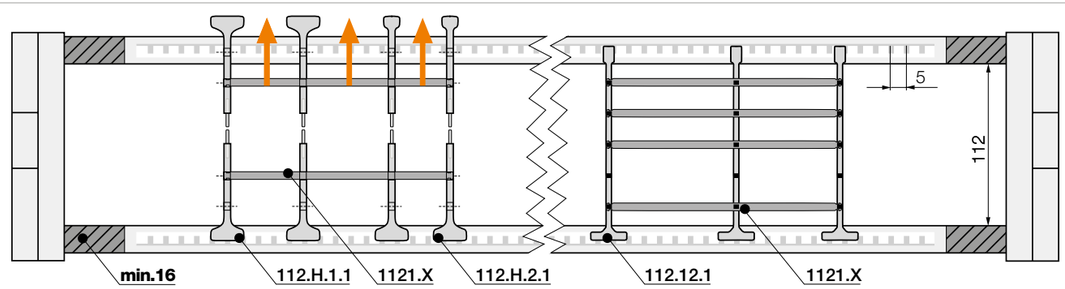

Note: Please be aware of the minimum lateral gap to the side links! **e-chain®: =16mm**
As standard separators are fitted every 2nd e-chain® link!

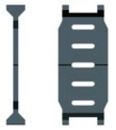

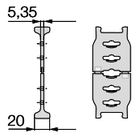

Part No.	
Split separator, wide top	
unassembled	**112.H.1**
assembled	**112.H.1.1**



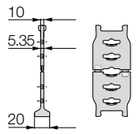

Part No.	
Split separator, narrow top	
unassembled	**112.H.2**
assembled	**112.H.2.1**

Split separators

In order to fill e-chains® more easily and effectively, these separators can be split in the middle. This allows easier access to middle shelf partitions. Fast assembly and easy retrofit. 2 types available: with wide or narrow top.



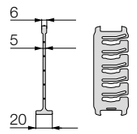

Part No.	
Lean separator	
unassembled	**112.12**
assembled	**112.12.1**

Lean separators[1)]

Quick fitting of shelves in several layers. Enables extremely fast replacement of individual cables in very full e-chains®. Only suitable for e-chains®.

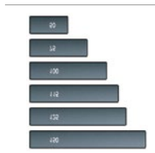

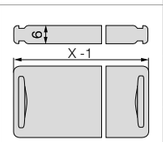

Part No.	
Shelf	
unassembled	**1120.X**
assembled	**1121.X**

Horizontal separation

Full-width shelf locks securely into separators at both ends, giving a fixed width. Can be used as full-width or modular shelving.

Width [mm]	Part No. unassembled	Part No. assembled
50	**1.120.050**	**1.121.050**
65	**1.120.065**	**1.121.065**
75	**1.120.075**	**1.121.075**
100	**1.120.100**	**1.121.100**

Width [mm]	Part No. unassembled	Part No. assembled
125	**1.120.125**	**1.121.125**
150	**1.120.150**	**1.121.150**
175	**1.120.175**	**1.121.175**
200	**1.120.200**	**1.121.200**

Width [mm]	Part No. unassembled	Part No. assembled
225	**1.120.225**	**1.121.225**
250	**1.120.250**	**1.121.250**
300	**1.120.300**	**1.121.300**
350	**1.120.350**	**1.121.350**

Width [mm]	Part No. unassembled	Part No. assembled
375	**1.120.375**	**1.121.375**
387	**1.120.387**	**1.121.387**
450	**1.120.450**	**1.121.450**



Lean separator for even faster filling: quickly insert several layers of cables into the e-chain® and reduce the installation time by up to 50%. Measured on a 4m long e-chain® fitted with 12 cables. **1) Note: Please combine a maximum of four lean separators with one shelf. Not suitable for side-mounted e-chains®!**

Available from stock
Upon request

All interior separations on this page are only suitable for e-chains®!

Product range

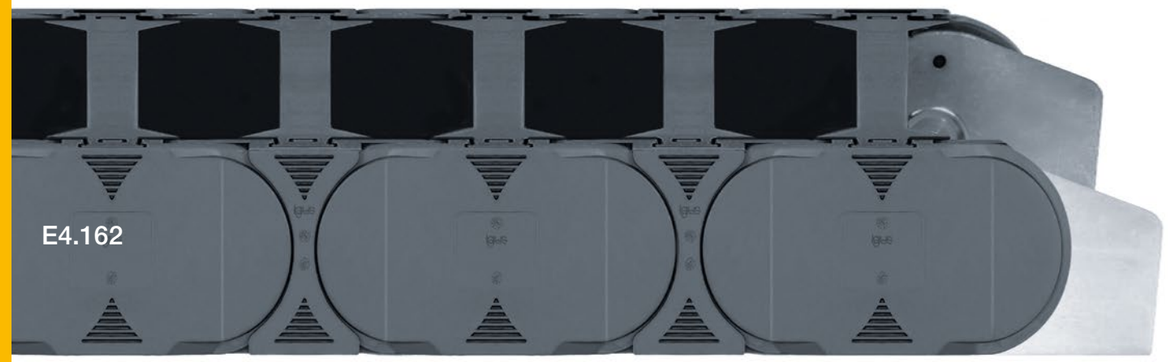

Part No. e-chains® with crossbars every link	*Bi* [mm]	*Ba* [mm]	E4.162 [kg/m]
E4.162.20.□.0	200	256	≈ 10.45
E4.162.25.□.0	250	306	≈ 10.74
E4.162.30.□.0	300	356	≈ 10.99
E4.162.32.□.0	325	381	≈ 11.02
E4.162.35.□.0	350	406	≈ 11.21

Part No. e-chains® with crossbars every link	*Bi* [mm]	*Ba* [mm]	E4.162 [kg/m]
E4.162.40.□.0	400	456	≈ 11.51
E4.162.45.□.0	450	506	≈ 11.65
E4.162.50.□.0	500	556	≈ 11.83
E4.162.55.□.0	550	606	≈ 12.11
E4.162.60.□.0	600	656	≈ 12.45

Available bend radii *R* [mm] | 250 | 300 | 350 | 400 | 450 | 500 | 550 | 600 | 750 | 1.000 |

Order key

E4.162.40.350.0

Series / Type | Inner height | Width index | Bend radius | Colour index

Order example:
Complete Part No. with the required radius □. Example:
E4.162.40.350.0 = crossbars removable along the inner and outer radius
Order index for colour options ▶ **www.igus.eu/info-colours**

Available from stock
Upon request

Unsupported applications | Short travels

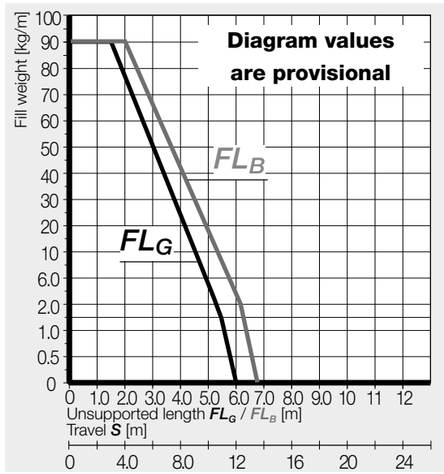

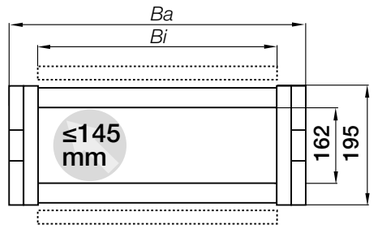

Inner height [mm]	162
Pitch [mm]	200
Links/m [pc.]	5
corresponds to [mm]	1,000
e-chain® length	$L_K = S/2 + K$

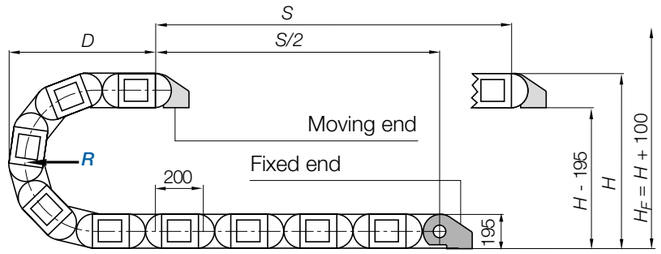

R	250	300	350	400	450	500	550	600	750	1,000
H	700	800	900	1,000	1,100	1,200	1,300	1,400	1,700	2,200
D	648	698	748	798	848	898	948	998	1,148	1,398
K	1,190	1,345	1,500	1,660	1,815	1,975	2,130	2,285	2,760	3,545

The required clearance height: $H_F = H + 100$mm (with 5.0kg/m fill weight)

Gliding applications | For travel lengths from 14m to max. 450m

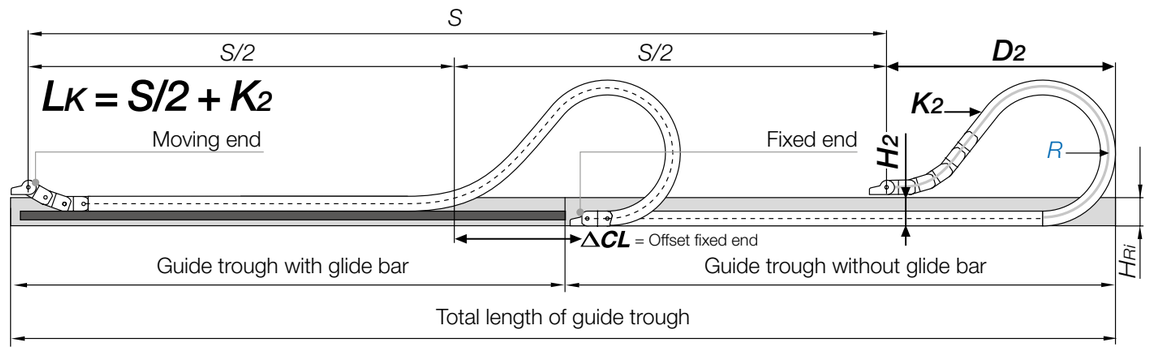

R	250	300	350	400	450	500	550	600	750	1,000
H_2	*	580	580	580	580	580	580	580	**	**
D_2^{+50}	*	950	1,050	1,350	1,600	1,950	2,050	2,400	**	**
K_2	*	1,600	1,800	2,400	2,800	3,200	3,400	3,800	**	**
ΔCL	*	300	350	600	800	1,100	1,150	1,450	**	**

Note: In case of travels between 12 and 14m we recommend an e-chain® with a longer unsupported length.
*Values such as unsupported applications **Values upon request

Available from stock
Upon request

Steel mounting brackets | Attachment from any side | Pivoting | Locking

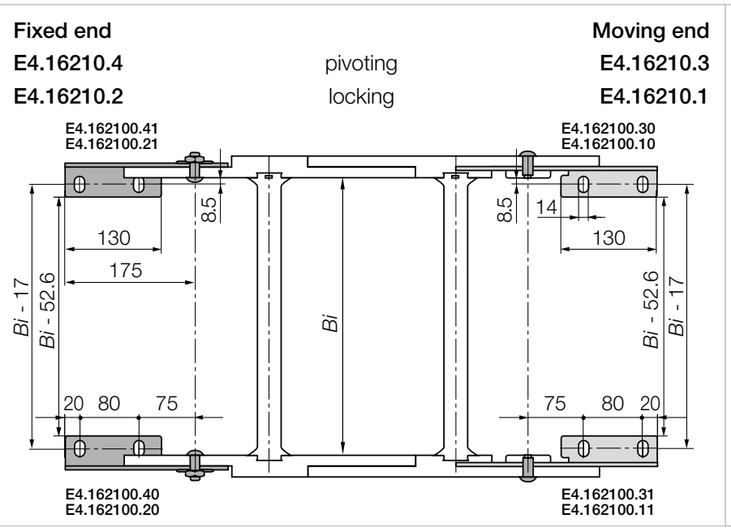

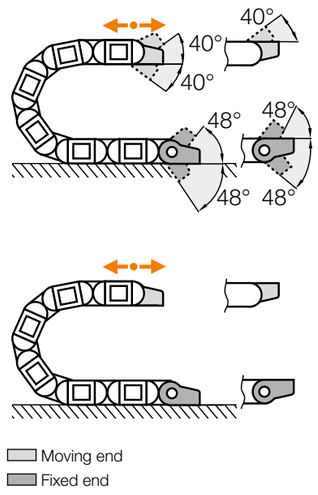

Part No. Full set	Part No. Full set	
Steel	Steel	Description
pivoting	locking	Mounting bracket
E4.16210.[1].34.VS.E45	E4.16210.[1].12.VS.E45	Full set (both ends) ending with outer side link, screwed - standard
E4.16210.[2].34.VS.E45	E4.16210.[2].12.VS.E45	Full set (both ends) beginning with outer side link (moving end) - ending with inner side link (fixed end), screwed - standard

Stainless steel version available. Please add index **.E45** (material: AISI 316Ti)

Note: The e-chains® may end with either an inner or an outer side link. An outer side link should always be the first e-chain® link at the moving end. Please specify the index [1] (for odd) or [2] (for even) depending on an even or odd number of links required. For the best appearance, make sure the e-chain® ends with [1] outer side links whenever possible (with odd number of links).

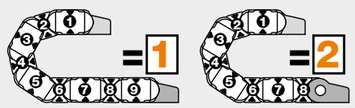

Order key

E4.16210.[1].12 .VS.A2

Series	Odd number of links	Full set, locking	Pre-fitted	Pre-fitted

Note: Possible variations for pre-fitted mounting brackets. To receive steel mounting brackets pre-fitted please add index **.A1**, **.A2**, **.A3** or **.A4**.

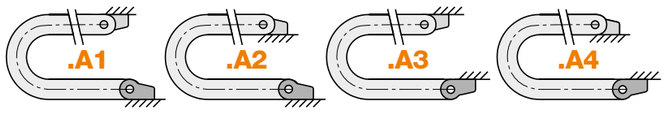

Available from stock
Upon request

Interior separation | Increase cable service life

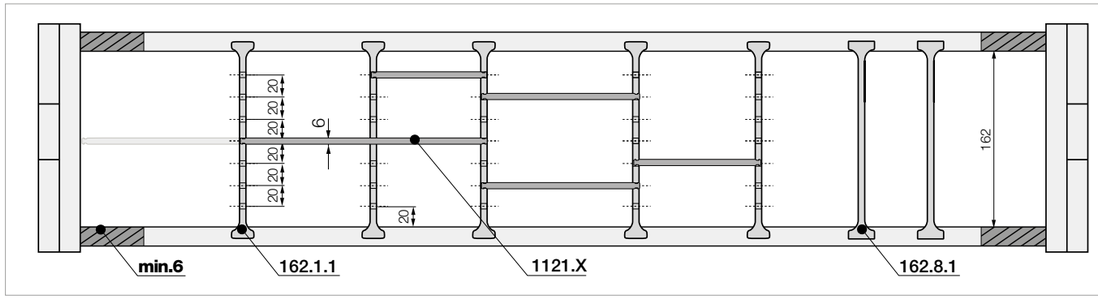

Note: Please be aware of the minimum lateral gap to the side links! **e-chain®: 6mm**
As standard separators are fitted every 2nd e-chain® link!



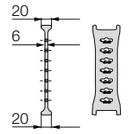

Part No. Standard separator	
unassembled	**162.1**
assembled	**162.1.1**

For all applications

Standard separator with a wide base for maximum holding force.



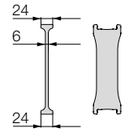

Part No. Locking separator	
unassembled	**162.8**
assembled	**162.8.1**

Locking separator for increased holding force

Locking separators offer higher crossbar opening forces for high humidity and/or large hydraulic hoses.

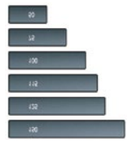

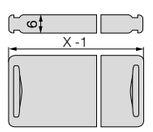

Part No. Shelf	
unassembled	**1120.X**
assembled	**1121.X**

Horizontal separation

Full-width shelf locks securely into separators at both ends, giving a fixed width. Can be used as full-width or modular shelving.

Width [mm]	Part No. unassembled	Part No. assembled
050	**1120.050**	**1121.050**
065	**1120.065**	**1121.065**
075	**1120.075**	**1121.075**
100	**1120.100**	**1121.100**
125	**1120.125**	**1121.125**
150	**1120.150**	**1121.150**
175	**1120.175**	**1121.175**
200	**1120.200**	**1121.200**
225	**1120.225**	**1121.225**
250	**1120.250**	**1121.250**
300	**1120.300**	**1121.300**
350	**1120.350**	**1121.350**
375	**1120.375**	**1121.375**
387	**1120.387**	**1121.387**
450	**1120.450**	**1121.450**

Available from stock
Upon request

Product range



Part No. e-chains® with crossbars every link	Bi [mm]	Ba [mm]	800 [kg/m]
800.20.□.0	200	260	≈ 15.09
800.25.□.0	250	310	≈ 15.50
800.30.□.0	300	360	≈ 15.89
800.32.□.0	325	385	≈ 16.05
800.35.□.0	350	410	≈ 16.22

Part No. e-chains® with crossbars every link	Bi [mm]	Ba [mm]	800 [kg/m]
800.40.□.0	400	460	≈ 16.74
800.45.□.0	450	510	≈ 16.88
800.50.□.0	500	560	≈ 17.23
800.55.□.0	550	610	≈ 17.63
800.60.□.0	600	660	≈ 18.19

Available bend radii *R* [mm] | 325 | 350 | 400 | 450 | 500 | 600 | 750 | 1.000 |

Order key

800.40.350.0

Series | Width index | Bend radius | Colour index

Order example:
Complete Part No. with the required radius □. Example:
800.40.350.0 = crossbars removable along the inner and outer radius
Order index for colour options ▶ **www.igus.eu/info-colours**

Available from stock
Upon request

Unsupported applications | Short travels

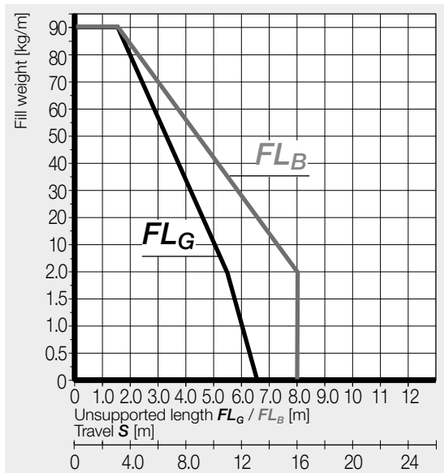

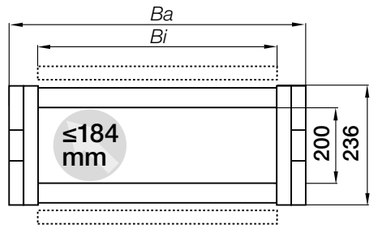

Inner height [mm]	200
Pitch [mm]	250
Links/m [pc.]	4
corresponds to [mm]	1,000
e-chain® length	$L_K = S/2 + K$

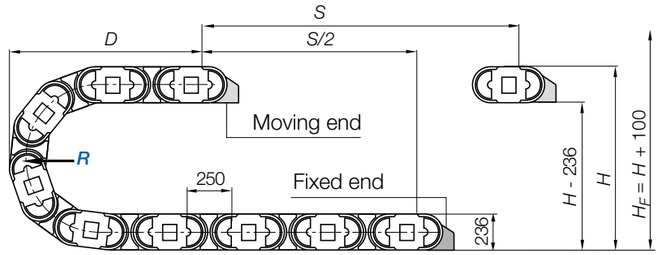

R	325	350	400	450	500	600	750	1,000
H	886	936	1,036	1,136	1,236	1,436	1,736	2,236
D	818	843	893	943	993	1,093	1,243	1,493
K	1,525	1,600	1,760	1,915	2,075	2,385	2,860	3,645

The required clearance height: $H_F = H + 100$mm (with 5.0kg/m fill weight)

Gliding applications | For travel lengths from 15m to max. 450m

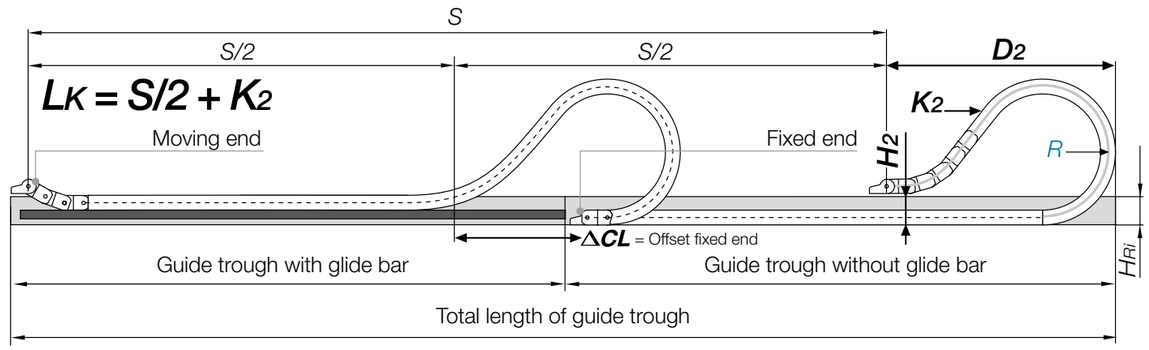

R	325	350	400	450	500	600	750	1,000
H_2	580	580	580	580	580	580	580	580
D_2 +50	1,030	1,080	1.380	1,610	2,000	2,480	*	*
K_2	2,000	2,000	2,500	3,000	3,250	4,000	*	*
ΔCL	250	300	550	750	1,050	1,400	*	*

Note: In case of travels between 12 and 15m we recommend an e-chain® with a longer unsupported length.
*Values upon request

Available from stock
Upon request

Steel mounting brackets | Attachment from any side | Pivoting

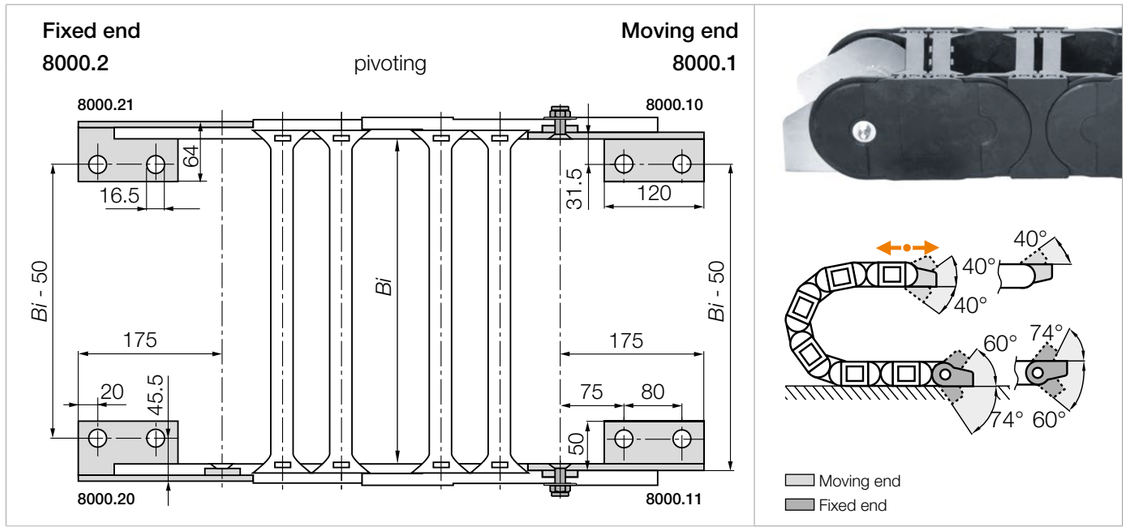

Part No. Full set	
Steel pivoting	**Description Mounting bracket**
8000.1.12.VS.E45	Full set (both ends) ending with outer side link, screwed - standard
8000.3.12.VS.E45	Full set (both ends) beginning with outer side link (moving end) - ending with inner side link (fixed end), screwed - standard

Stainless steel version available. Please add index **.E45** (material: AISI 316Ti)

Note: The e-chains® may end with either an inner or an outer side link. An outer side link should always be the first e-chain® link at the moving end. Please specify the index 1 (for odd) or 3 (for even) depending on an even or odd number of links required. For the best appearance, make sure the e-chain® ends with 1 outer side links whenever possible (with odd number of links).

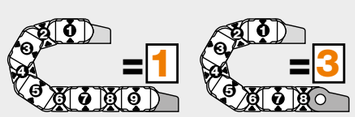

Order key

8000.1.12 .VS.A2

Series	Odd number of links	Full set	Pre-fitted	Pre-fitted

Note: Possible variations for pre-fitted mounting brackets. To receive steel mounting brackets pre-fitted please add index **.A1**, **.A2**, **.A3** or **.A4**.

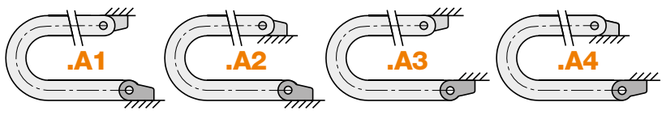

Available from stock
Upon request

Interior separation

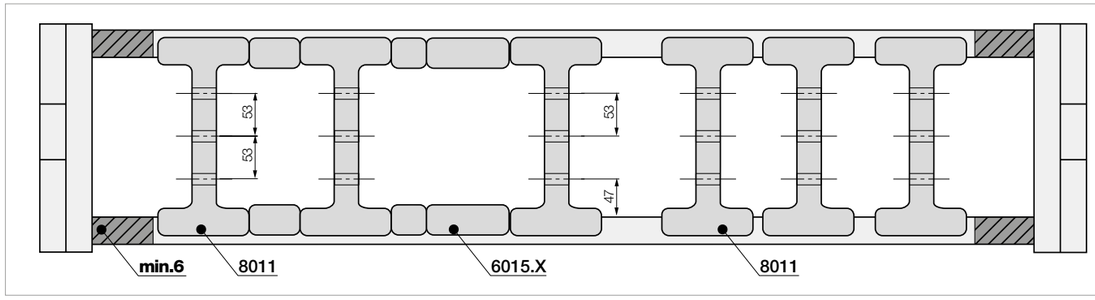

Note: Please be aware of the minimum lateral gap to the side links! **e-chain®: 6mm**
As standard separators are fitted every 2nd e-chain® link!



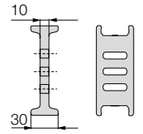

Part No. Slotted separator	
unassembled	8001
assembled	8011

Slotted separator

For a vertical subdivision. The slot allows basic vertical/horizontal shelving arrangements.



XX [mm] = 10, 15, 20



Part No. Spacer	
unassembled	6005.XX
assembled	6015.XX

Spacer for fixing the separator position

To avoid reducing the internal height by 2mm, they can also be mounted on the opening crossbar from the outside (not for long travels).

Modular shelving system | For widths from 50 to 60mm

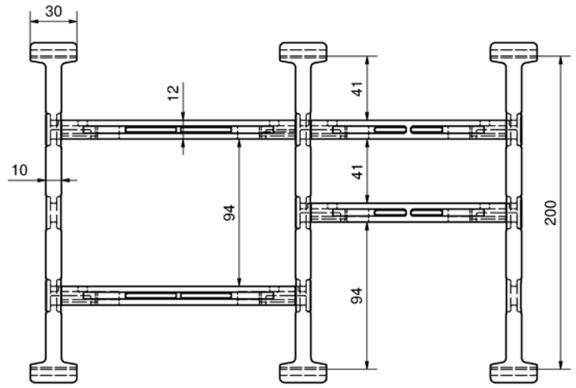



- Reliable, strong guidance also with large cable diameters
- Modular design with easy installation

Part No. unassembled	Part No. assembled	Form Snap in tab	Part No. Separator	Part No. Crossbar	Width [mm]
8001H1	8011H1	❶ one side	❸ 8001	❹ 450.XX.A	50 - 600
8001H2	8011H2	❷ both sides	❸ 8001	❹ 450.XX.A	50 - 600

Available from stock
Upon request

Product range

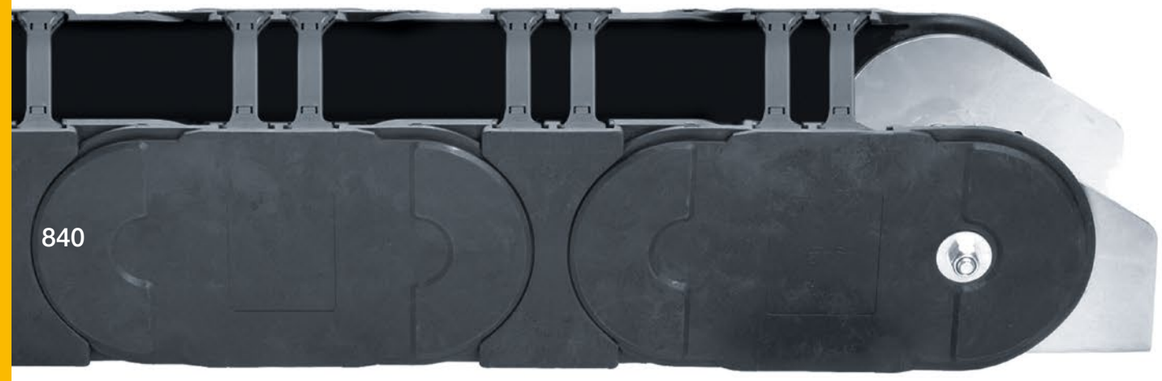

Part No. e-chains® with crossbars every link	Bi [mm]	Ba [mm]	840 [kg/m]
840.13.□.0	100	160	≈ 13.84
840.15.□.0	113	173	≈ 13.87
840.16.□.0	125	185	≈ 13.95
840.17.□.0	138	198	≈ 14.04
840.18.□.0	150	210	≈ 14.13
840.20.□.0	163	223	≈ 14.17
840.21.□.0	175	235	≈ 14.22
840.22.□.0	188	248	≈ 14.27
840.23.□.0	200	260	≈ 14.35
840.25.□.0	213	273	≈ 14.43
840.26.□.0	225	285	≈ 14.49
840.27.□.0	238	298	≈ 14.57
840.28.□.0	250	310	≈ 14.61
840.30.□.0	263	323	≈ 14.72
840.31.□.0	275	335	≈ 14.75
840.32.□.0	288	348	≈ 14.82
840.33.□.0	300	360	≈ 14.91
840.35.□.0	313	373	≈ 15.06

Part No. e-chains® with crossbars every link	Bi [mm]	Ba [mm]	840 [kg/m]
840.36.□.0	325	385	≈ 15.09
840.37.□.0	338	398	≈ 15.11
840.38.□.0	350	410	≈ 15.15
840.40.□.0	363	423	≈ 15.34
840.41.□.0	375	435	≈ 15.39
840.42.□.0	388	448	≈ 15.50
840.43.□.0	400	460	≈ 15.57
840.45.□.0	413	473	≈ 15.63
840.46.□.0	425	485	≈ 15.69
840.47.□.0	438	498	≈ 15.72
840.48.□.0	450	510	≈ 15.80
840.50.□.0	463	523	≈ 15.87
840.51.□.0	475	535	≈ 15.91
840.52.□.0	488	548	≈ 15.93
840.53.□.0	500	560	≈ 16.00
840.55.□.0	513	573	≈ 16.31
840.60.□.0	563	623	≈ 16.47

Available bend radii *R* [mm] | 325 | 350 | 400 | 450 | 500 | 600 | 750 | 1.000 |

Order key

840.40.350.0

Series | Width index | Bend radius | Colour index

Order example:
Complete Part No. with the required radius □. Example:
840.40.350.0 = crossbars removable along the inner and outer radius
Order index for colour options ▶ **www.igus.eu/info-colours**

Available from stock
Upon request

Unsupported applications | Short travels

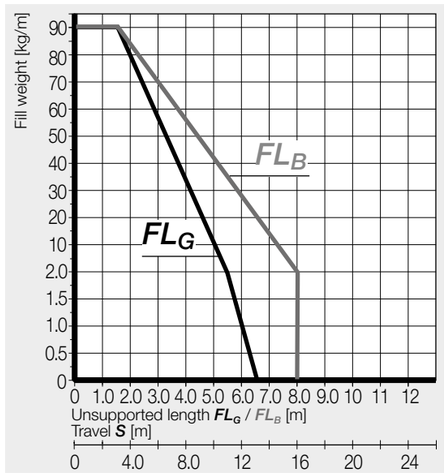

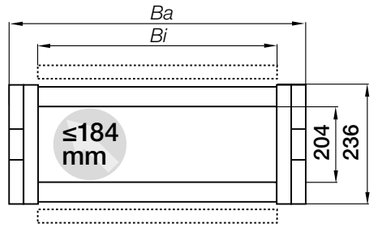

Inner height [mm]	204
Pitch [mm]	250
Links/m [pc.]	4
corresponds to [mm]	1,000
e-chain® length	$L_K = S/2 + K$

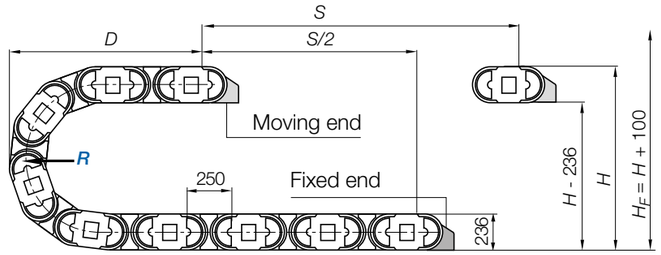

R	325	350	400	450	500	600	750	1,000
H	886	936	1,036	1,136	1,236	1,436	1,736	2,236
D	818	843	893	943	993	1,093	1,243	1,493
K	1,525	1,600	1,760	1,915	2,075	2,385	2,860	3,645

The required clearance height: $H_F = H + 100mm$ (with 5.0kg/m fill weight)

Gliding applications | For travel lengths from 15m to max. 450m

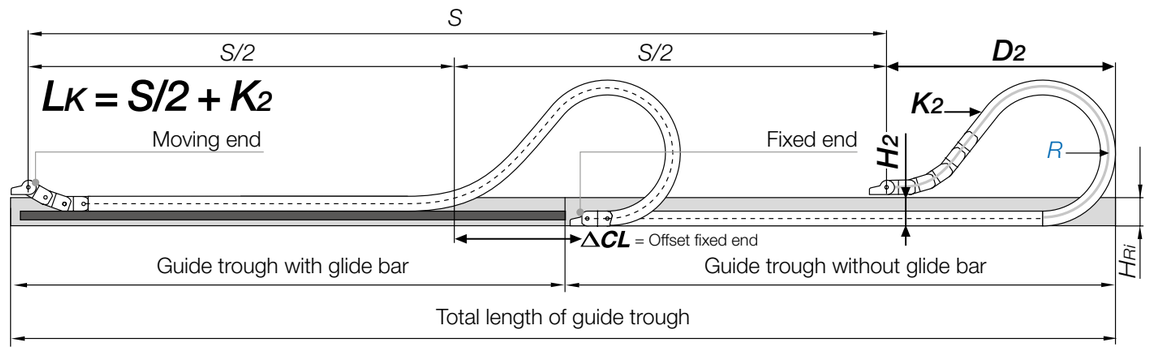

R	325	350	400	450	500	600	750	1,000
H_2	580	580	580	580	580	580	580	580
D_2^{+50}	1,030	1,080	1.380	1,610	2,000	2,480	*	*
K_2	2,000	2,000	2,500	3,000	3,250	4,000	*	*
ΔCL	250	300	550	750	1,050	1,400	*	*

Note: In case of travels between 12 and 15m we recommend an e-chain® with a longer unsupported length.
*Values upon request

Available from stock
Upon request

Steel mounting brackets | Attachment from any side | Pivoting

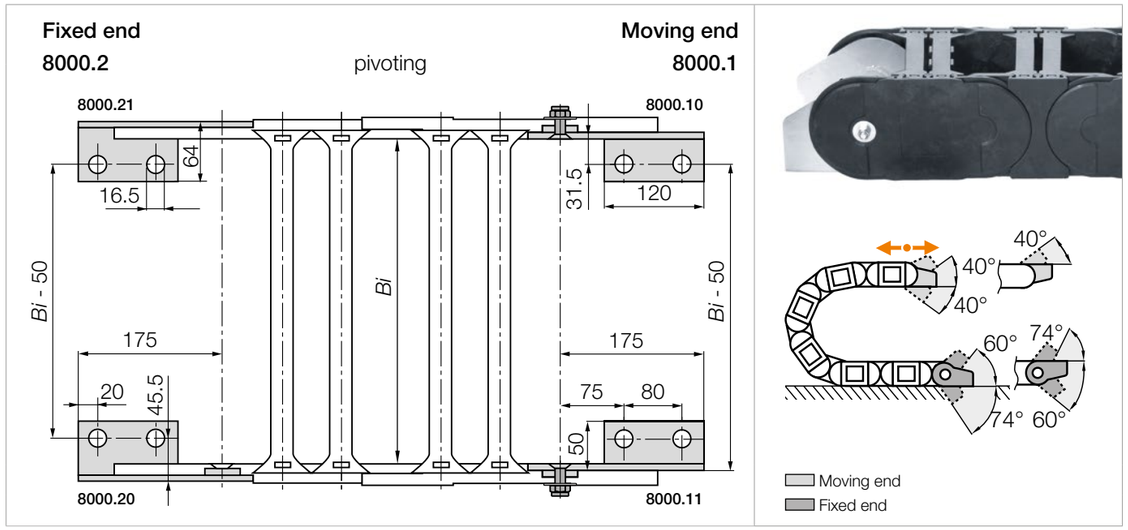

Part No. Full set	
Steel	**Description**
pivoting	**Mounting bracket**
8000.1.12.VS.E45	Full set (both ends) ending with outer side link, screwed - standard
8000.3.12.VS.E45	Full set (both ends) beginning with outer side link (moving end) - ending with inner side link (fixed end), screwed - standard

Stainless steel version available. Please add index **.E45** (material: AISI 316Ti)

Note: The e-chains® may end with either an inner or an outer side link. An outer side link should always be the first e-chain® link at the moving end. Please specify the index 1 (for odd) or 3 (for even) depending on an even or odd number of links required. For the best appearance, make sure the e-chain® ends with 1 outer side links whenever possible (with odd number of links).

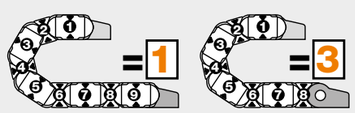

Order key

8000.1.12 .VS.A2

Series	Odd number of links	Full set	Pre-fitted	Pre-fitted

Note: Possible variations for pre-fitted mounting brackets. To receive steel mounting brackets pre-fitted please add index **.A1**, **.A2**, **.A3** or **.A4**.

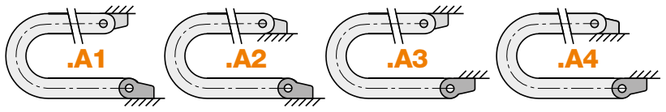

Available from stock
Upon request

Interior separation

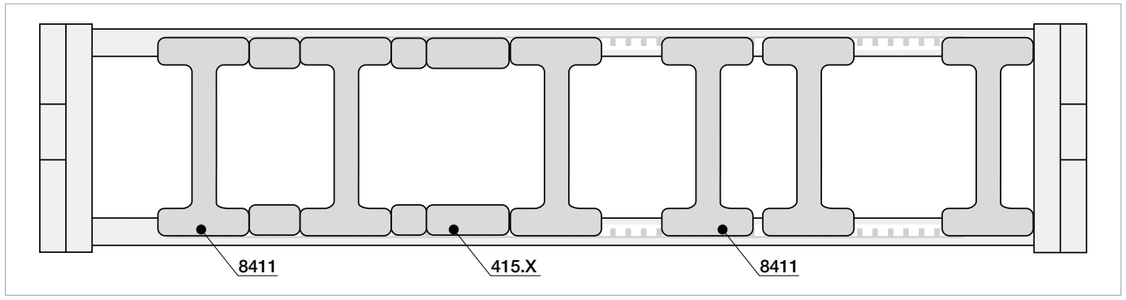

No lateral gap to side links necessary.
As standard separators are fitted every 2nd e-chain® link!



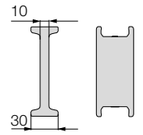

Part No. Separator	
unassembled	**8401**
assembled	**8011**

Separator

For a vertical subdivision. Offers security due to its wide base design, also when used with large cables or hoses.



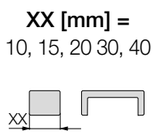

XX [mm] =
10, 15, 20 30, 40

Part No. Spacer	
unassembled	**405.XX**
assembled	**415.XX**

Spacer for fixing the separator position

To avoid reducing the internal height by 2mm, they can also be mounted on the opening crossbar from the outside (not for long travels).

Available from stock
Upon request

Product range



Part No. e-chains® with crossbars every link	Bi [mm]	Ba [mm]	E4.350 [kg/m]
E4.350.400.□.0	400	540	≈ 61.9
E4.350.500.□.0	500	640	≈ 65.7
E4.350.600.□.0	600	740	≈ 69.6

Part No. e-chains® with crossbars every link	Bi [mm]	Ba [mm]	E4.350 [kg/m]
E4.350.700.□.0	700	840	≈ 73.4
E4.350.800.□.0	800	940	≈ 77.2

Available bend radii *R* [mm] | 500 | 750 | 1.000 |

Order key

E4.350.500.500.0

Series / Type | Inner height | Width index | Bend radius | Colour index

Note:

Systems of this type should be designed in conjunction with our engineering team.

Please contact us at ▶ **www.igus.eu/contact**

Unsupported applications | Short travels

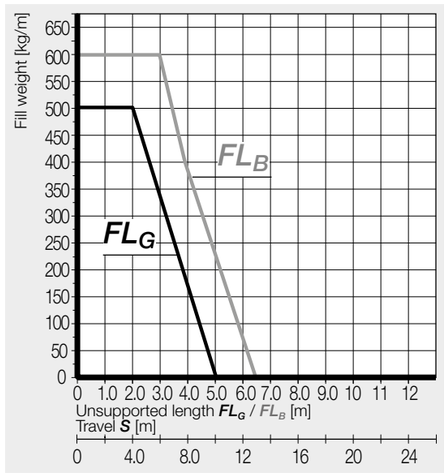

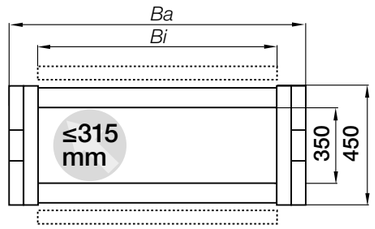

Inner height [mm]	350
Pitch [mm]	470
Links/m [pc.]	2
corresponds to [mm]	940
e-chain® length	$L_K = S/2 + K$

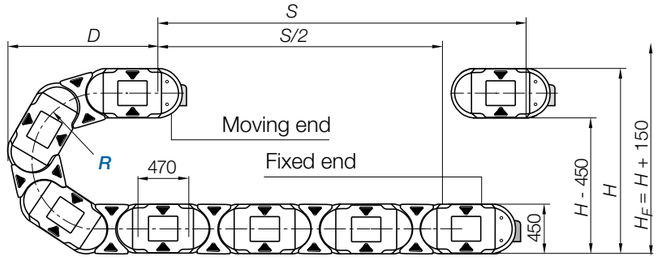

R	500	750	1,000
H	1,450	1,950	2,450
D	1,430	1,680	1,930
K	2,515	3,300	4,085

The required clearance height: $H_F = H + 150$mm

Application example | The largest igus® polymer e-chain® with 350mm inner height



Lighter than comparable steel chains, the E4.350 series effortlessly carries more than 100kg of fill weight per metre on a 138m travel.

Steel mounting brackets | Locking

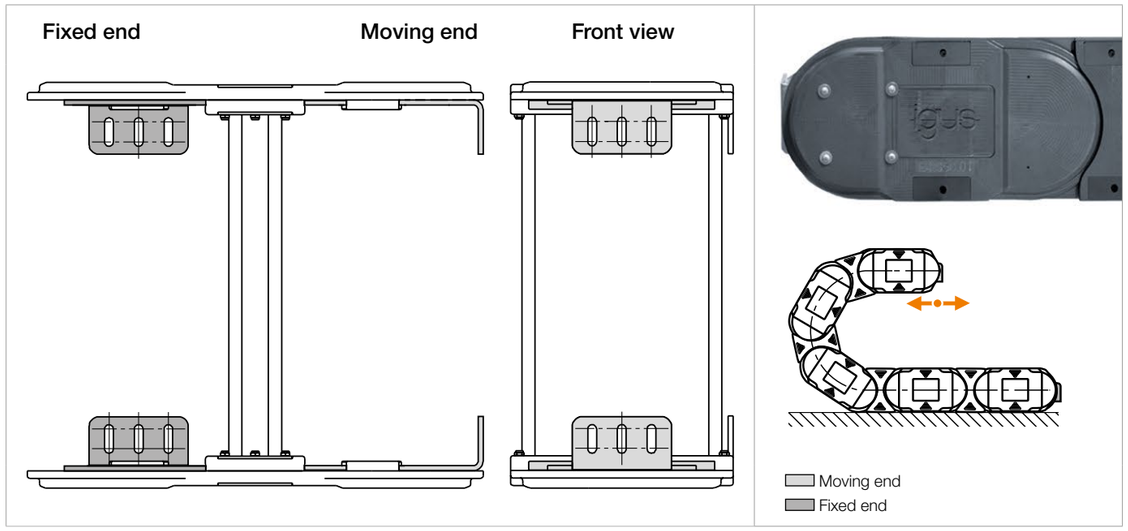



Note: Mounting brackets for series E4.350 according to your requirements. Steel or stainless steel available.
(Material: AISI 304 stainless steel)

Glide pads for energy chains on long travels

- Low-friction and low-wear gliding elements increase the service life of igus® e-chains® in gliding applications
- For travel speeds from 1 to 3m/s
- Especially in an environment where abrasive media are present
- Easy to retrofit

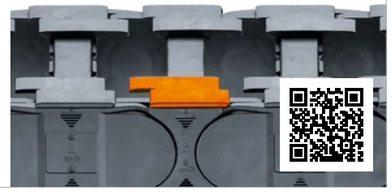

E4.1R rol e-chains® - reduced noise, vibration and drive energy

- Easy changeover from gliding to rolling e-chain®
- rol e-chain® links suitable for all radii of the standard series
- Ideal for long travels
- Quiet operation due to equal pitch of the e-chain® links

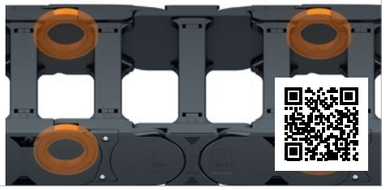

Interior separation

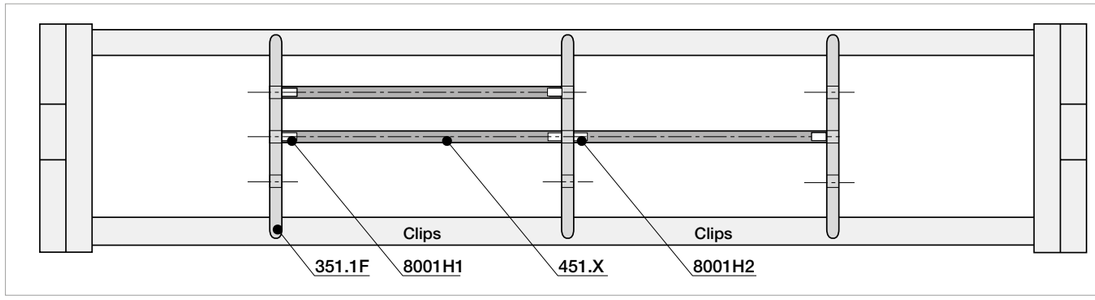

No lateral gap to side links necessary.
As standard separators are fitted every 2nd e-chain® link!

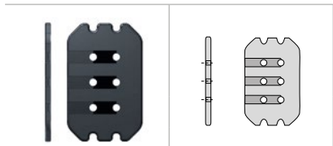

Part No. Separator for vertical subdivision	
unassembled	**350.1F**
assembled	**351.1F**

Separator for vertical subdivision

For a vertical separation with 450.X.



Part No. Horizontal shelves	
unassembled	**450.X**
assembled	**451.X**

For horizontal interior separation

Horizontal shelves of various widths with separators for vertical subdivision. They can be fitted at 3 different heights.

Width [mm]	Part No. unassembled	Part No. assembled	Width [mm]	Part No. unassembled	Part No. assembled	Width [mm]	Part No. unassembled	Part No. assembled	Width [mm]	Part No. unassembled	Part No. assembled
050	**450.050**	**451.050**	175	**450.170**	**451.170**	312	**450.310**	**451.310**	450	**450.450**	**451.450**
055	**450.055**	**451.055**	187	**450.180**	**451.180**	325	**450.320**	**451.320**	462	**450.460**	**451.460**
065	**450.060**	**451.060**	200	**450.200**	**451.200**	337	**450.330**	**451.330**	475	**450.470**	**451.470**
075	**450.070**	**451.070**	212	**450.210**	**451.210**	350	**450.350**	**451.350**	487	**450.480**	**451.480**
087	**450.080**	**451.080**	225	**450.220**	**451.220**	362	**450.360**	**451.360**	500	**450.500**	**451.500**
100	**450.100**	**451.100**	237	**450.230**	**451.230**	375	**450.370**	**451.370**	512	**450.510**	**451.510**
112	**450.110**	**451.110**	250	**450.250**	**451.250**	387	**450.380**	**451.380**	525	**450.520**	**451.520**
125	**450.120**	**451.120**	262	**450.260**	**451.260**	400	**450.400**	**451.400**	537	**450.530**	**451.530**
137	**450.130**	**451.130**	275	**450.270**	**451.270**	412	**450.410**	**451.410**	550	**450.550**	**451.550**
150	**450.150**	**451.150**	287	**450.280**	**451.280**	425	**450.420**	**451.420**	600	**450.600**	**451.600**
162	**450.160**	**451.160**	300	**450.300**	**451.300**	437	**450.430**	**451.430**			



Attachment from any side with KMA mounting brackets

Cost-effective: optimised internal space

Easy filling: openable from both sides

Precise partitions: notch crossbar with visual scale

Fast assembly: e-chains® and e-tubes openable along the inner and outer radius, from both sides

Chip protection: very tightly sealed lids

High strength: due to undercut design

Straight run: due to inner/outer link principle

Light design, high dynamics, cost-effective - E4.1L

All-rounder e-chains® and e-tubes for high dynamics. The E4.1L series was developed to combine the advantages of the E2/000 and E4.1 series in one series. On the one hand the strength of the E4.1 system and on the other the easy accessibility and assembly of the E2/000 system. The E4.1L system is the ideal energy chain for mechanical engineering and applications where there must be an optimum relationship between technical requirements and economic efficiency.

Benefits

- 30% lighter and more cost-effective than the comparable E4.1
- Cost-effective, strong and light due to optimised e-chain® link design
- Ideal ratio of internal and external dimensions with thinner outer links and optimised crossbar geometry
- e-chains® and e-tubes openable along the inner and outer radius, from both sides
- Inside completely accessible for easy filling
- Very tightly fitting lids on the e-tubes, virtually no gaps or openings
- Also suitable for side-mounted, standing and hanging applications
- Lower weight, high strength and good dynamics

Typical application areas

- Machine tools
- General mechanical engineering
- If the strength of the E2/000 is not enough for you, but an E4.1 is oversized

Selection table

Part No.	Inner height *hi* [mm]	Outer height *ha* [mm]	Inner width *Bi* [mm]	Outer width *Ba* [mm]	Bend radius *R* [mm]	Unsupported length ≤ [m]	Page
E4.1L - e-chains® with crossbars every link							
The lightweight all-rounder - even for demanding applications.							
E4.31L	31	42	40 - 175	54 - 189	055 - 250	2.00	**272**
E4.38L	38	54	50 - 300	66 - 316	063 - 300	2.75	**278**
E4.48L	48	64	50 - 300	70 - 320	075 - 350	3.75	**284**
E4.64L	64	84	75 - 350	101 - 376	125 - 400	4.00	**290**
R4.1L - e-tubes fully enclosed							
Lightweight, excellent cable protection.							
R4.31L	31	42	50 - 125	64 - 139	075 - 250	2.00	**272**
R4.38L	38	54	50 - 250	66 - 266	125 - 300	2.75	**278**
R4.48L	48	64	50 - 250	70 - 270	125 - 350	3.75	**284**

Technical data

General properties

Speed gliding[1] / acceleration gliding[1]	≤ 5m/s / ≤ 25m/s²
Speed FL_G/acceleration FL_G	≤ 20m/s / ≤ 200m/s²
Speed FL_B/acceleration FL_B	≤ 3m/s / ≤ 6m/s²
igumid® G LW material - permitted temperature °C	-40°C/+120°C
Flammability class, igumid® G LW	VDE 0304 IIC UL94-HB

1) Series E4.31L / R4.31L: if a gliding application is required for a long travel, please consult igus®

Installation types, maximum travel lengths

Series	Unsupported	Gliding[1]	Vertical hanging	Vertical standing	Side mounted, unsupported
E4.31L / R4.31L	≤ 4.0m	upon request	≤ 40m	≤ 2.5m	≤ 0.6m
E4.38L / R4.38L	≤ 5.5m	≤ 80m	≤ 50m	≤ 3.0m	≤ 1.0m
E4.48L / R4.48L	≤ 7.5m	≤ 100m	≤ 80m	≤ 3.0m	≤ 1.2m
E4.64L	≤ 4.0m	upon request	≤ 80m	≤ 8.0m	≤ 2.0m

1) Series E4.31L / R4.31L: if a gliding application is required for a long travel, please consult igus®

Product range



Part No. e-chains® with crossbars every link	Part No. e-tubes closed	*Bi* [mm]	*Ba* [mm]	E4.31L [kg/m]	R4.31L [kg/m]
E4.31L.040.□□.0	–	40	54	≈ 0.70	–
E4.31L.050.□□.0	R4.31L.050.□□.0	50	64	≈ 0.74	≈ 0.87
E4.31L.062.□□.0	–	62	76	≈ 0.76	–
E4.31L.075.□□.0	R4.31L.075.□□.0	75	89	≈ 0.78	≈ 1.01
E4.31L.087.□□.0	–	87	101	≈ 0.83	–
E4.31L.100.□□.0	R4.31L.100.□□.0	100	114	≈ 0.88	≈ 1.10
E4.31L.112.□□.0	–	112	126	≈ 0.93	–
E4.31L.125.□□.0	R4.31L.125.□□.0	125	139	≈ 0.96	≈ 1.28
E4.31L.137.□□.0*	–	137	151	≈ 0.98	–
E4.31L.150.□□.0	R4.31L.150.□□.0*	150	164	≈ 1.00	≈ 1.40
E4.31L.162.□□.0	–	162	176	≈ 1.04	–
E4.31L.175.□□.0	R4.31L.175.□□.0*	175	189	≈ 1.13	≈ 1.55
E4.31L.187.□□.0*	–	187	201	≈ 1.17	–
E4.31L.200.□□.0*	R4.31L.200.□□.0*	200	214	≈ 1.17	≈ 1.68

Available bend radii *R* [mm] | 055[1)] | 063[1)] | 075 | 090 | 100 | 125 | 150 | 175 | 200 | 250 |

*Width available upon request, please consult igus® for delivery time. 1) Radius not available for e-tubes.

Order key

E4.31L.100.100.0

Series / Type	Inner height	Width index	Bend radius	Colour index

Order example:
Complete Part No. with the required radius □*R*□. Example:
E4.31L.100.100.0 = crossbars openable along inner and outer radius, from both sides
R4.31L.100.100.0 = lids openable along inner and outer radius, from both sides
Order index for colour options ▶ **www.igus.eu/info-colours**

Available from stock
Upon request

Unsupported applications | Short travels

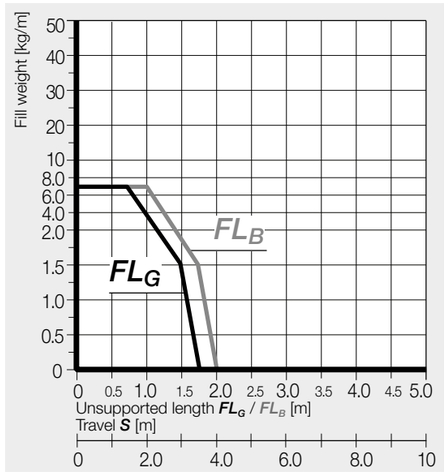

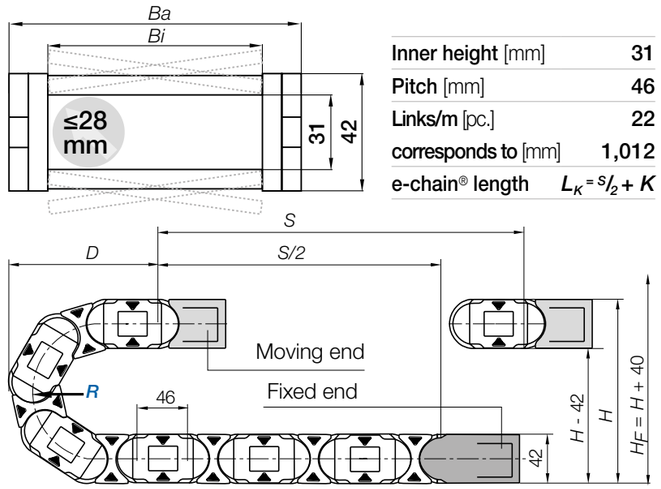

Inner height [mm]	31
Pitch [mm]	46
Links/m [pc.]	22
corresponds to [mm]	1,012
e-chain® length	$L_K = S/2 + K$

R	055[1)]	063[1)]	075	090	100	125	150	175	200	250
H	152	168	192	222	242	292	342	392	442	542
D	145	153	165	180	190	215	240	265	290	340
K	265	290	330	375	410	485	565	645	725	880

The required clearance height: $H_F = H + 40$mm (with 1.0kg/m fill weight)

1) Radius not available for e-tubes.

Note: If a gliding application is required for a long travel, please consult igus®.

Available from stock
Upon request

E4.1L e-chains® | Series E4.31L

KMA mounting brackets | Attachment from any side | Pivoting | Locking

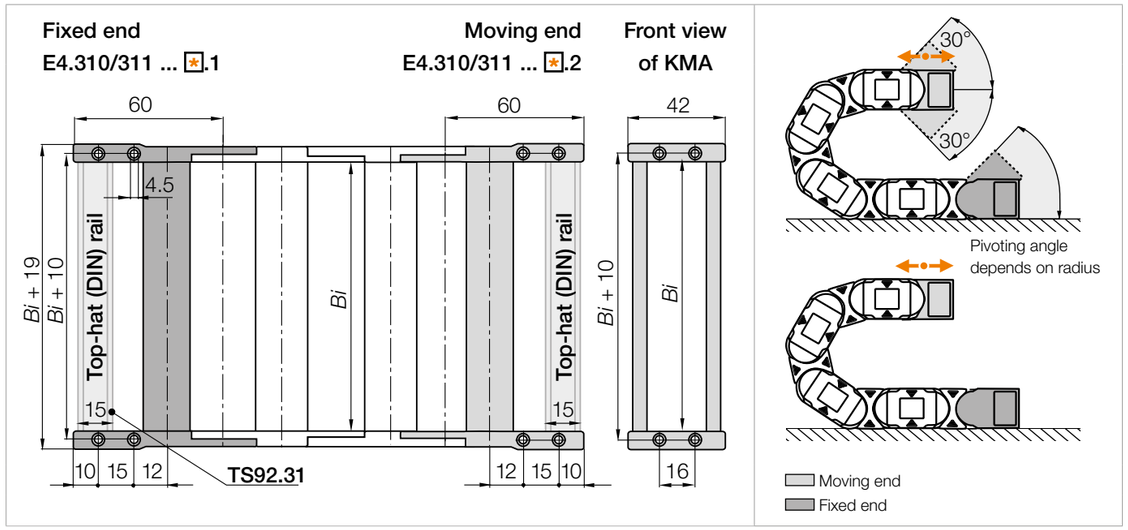

Width index	KMA full set		
	Part No. pivoting	Part No. locking	*Bi* [mm]
040.	**E4.310.040.✱.12.□**	**E4.311.040.✱.12.□**	40
050.	**E4.310.050.✱.12.□**	**E4.311.050.✱.12.□**	50
062.	**E4.310.062.✱.12.□**	**E4.311.062.✱.12.□**	62
075.	**E4.310.075.✱.12.□**	**E4.311.075.✱.12.□**	75
087.	**E4.310.087.✱.12.□**	**E4.311.087.✱.12.□**	87
100.	**E4.310.100.✱.12.□**	**E4.311.100.✱.12.□**	100
112.	**E4.310.112.✱.12.□**	**E4.311.112.✱.12.□**	112
125.	**E4.310.125.✱.12.□**	**E4.311.125.✱.12.□**	125
137.	E4.310.137.✱.12.□*	E4.311.137.✱.12.□*	137
150.	**E4.310.150.✱.12.□**	**E4.311.150.✱.12.□**	150
162.	**E4.310.162.✱.12.□**	**E4.311.162.✱.12.□**	162
175.	**E4.310.175.✱.12.□**	**E4.311.175.✱.12.□**	175
187.	E4.310.187.✱.12.□*	E4.311.187.✱.12.□*	187
200.	E4.310.200.✱.12.□*	E4.311.200.✱.12.□*	200

*Width available upon request, please consult igus® for delivery time.
(KMA = polymer metal mounting bracket)

Available from stock
Upon request

E4.1L e-tubes | Series R4.31L

KMA mounting brackets | Attachment from any side | Pivoting | Locking

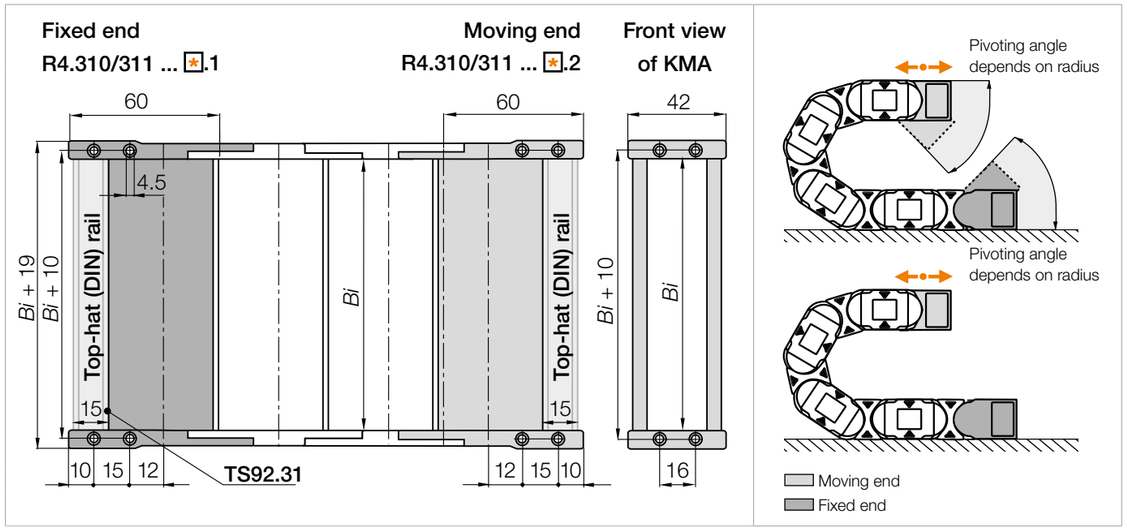

Width index	KMA full set		
	Part No. pivoting	Part No. locking	*Bi* [mm]
050.	**R4.310.050.✱.12.□**	**R4.311.050.✱.12.□**	50
075.	**R4.310.075.✱.12.□**	**R4.311.075.✱.12.□**	75
100.	**R4.310.100.✱.12.□**	**R4.311.100.✱.12.□**	100
125.	**R4.311.125.✱.12.□**	**R4.311.125.✱.12.□**	125
150.	R4.310.150.✱.12.□*	R4.311.150.✱.12.□*	150
175.	R4.310.175.✱.12.□*	R4.311.175.✱.12.□*	175
200.	R4.310.200.✱.12.□*	R4.311.200.✱.12.□*	200

*Width available upon request, please consult igus® for delivery time.
(KMA = polymer metal mounting bracket)

Note ✱: The e-chains® may end with either an inner or an outer side link. An outer side link should always be the first e-chain® link at the moving end. Please specify the index 1 (for odd) or 2 (for even) depending on an even or odd number of links required.

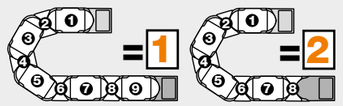

Order key

E4.310.100.2.12.C.A2

Series	Width index	Even number of links	Full set	C-profile option	Pre-fitted

Note: Possible orientations for KMA mounting brackets. For mounting brackets pre-fitted **without strain relief**, please add index **.A**. For types pre-fitted **with strain relief** please add index **.A1**, **.A2**, **.A3** or **.A4**.



For the top-hat (DIN) rail option TS92.31 please add index **.C**.

Available from stock
Upon request

E4.1L | Series E4.31L / R4.31L

Interior separation | Increase cable service life

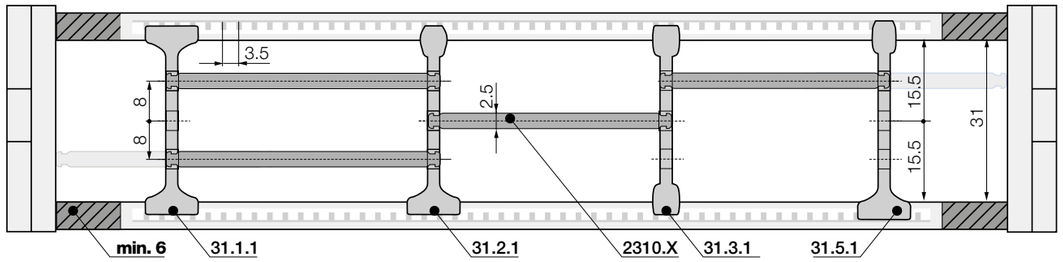

Note: Please be aware of the minimum lateral gap to the side links! **e-tube: 6mm** | **e-chain®: 6mm**
As standard separators are fitted every 2nd e-chain® link!



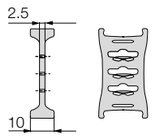

Part No.	
Standard separator	
unassembled	**31.1**
assembled	**31.1.1**

For all applications

Standard separator with a wide base for maximum holding force.



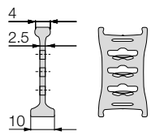

Part No.	
Separator, narrow top	
unassembled	**31.2**
assembled	**31.2.1**

For even faster installation

Wide on one side for high holding force, narrow on opposite side for easy cable fitting.



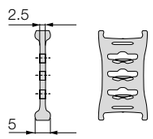

Part No.	
Separator, narrow	
unassembled	**31.3**
assembled	**31.3.1**

For a large number of thin cables

Separator with a narrow base for a large number of thin cables side by side. Saves space.



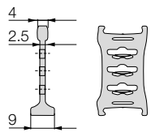

Part No.	
Notch separator	
unassembled	**31.5**
assembled	**31.5.1**

Locks securely in preset increments

Notch separator for exact positioning.
Recommended for side-mounted applications.

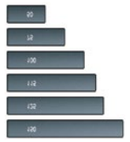

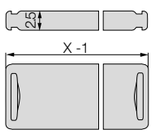

Part No.	
Shelf	
unassembled	**2300.X**
assembled	**2310.X**

Horizontal separation

Full-width shelf locks securely into separators at both ends, giving a fixed width. Can be used as full-width or modular shelving.

Width [mm]	Part No. unassembled	Part No. assembled
015	**2300.015**	**2310.015**
025	**2300.025**	**2310.025**
030	**2300.030**	**2310.030**
038	**2300.038**	**2310.038**
040	**2300.040**	**2310.040**
050	**2300.050**	**2310.050**

Width [mm]	Part No. unassembled	Part No. assembled
057	**2300.057**	**2310.057**
060	**2300.060**	**2310.060**
062	**2300.062**	**2310.062**
065	**2300.065**	**2310.065**
070	**2300.070**	**2310.070**
075	**2300.075**	**2310.075**

Width [mm]	Part No. unassembled	Part No. assembled
077	**2300.077**	**2310.077**
080	**2300.080**	**2310.080**
087	**2300.087**	**2310.087**
090	**2300.090**	**2310.090**
100	**2300.100**	**2310.100**
103	**2300.103**	**2310.103**

Width [mm]	Part No. unassembled	Part No. assembled
110	**2300.110**	**2310.110**
120	**2300.120**	**2310.120**
125	**2300.125**	**2310.125**

Available from stock
Upon request

E4.1L | Series E4.31L / R4.31L

Interior separation | To allow faster filling

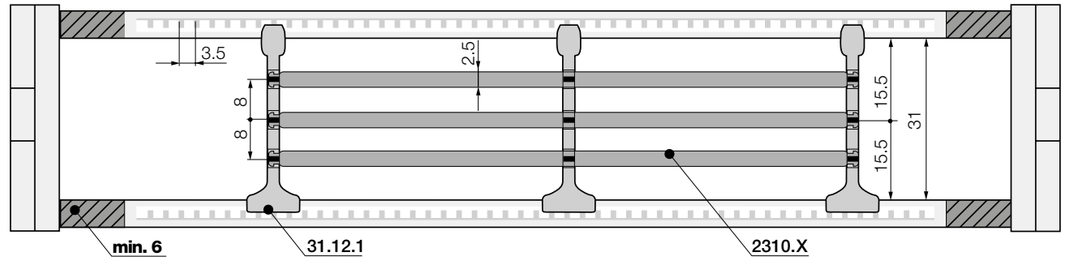

Note: Please be aware of the minimum lateral gap to the side links! **e-tube: 6mm** | **e-chain®: 6mm**
As standard separators are fitted every 2nd e-chain® link!



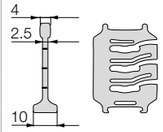

Part No.	
Lean separator	
unassembled	**31.12**
assembled	**31.12.1**

Lean separators[1)]

Quick fitting of shelves in several layers. Enables extremely fast replacement of individual cables in very full e-chains®. Only suitable for e-chains®.

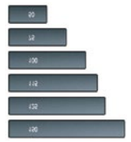

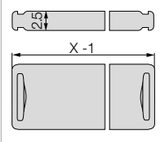

Part No.	
Shelf	
unassembled	**2300.X**
assembled	**2310.X**

Horizontal separation

Full-width shelf locks securely into separators at both ends, giving a fixed width. Can be used as full-width or modular shelving.

Width [mm]	Part No. unassembled	Part No. assembled
015	**2300.015**	**2310.015**
025	**2300.025**	**2310.025**
030	**2300.030**	**2310.030**
038	**2300.038**	**2310.038**
040	**2300.040**	**2310.040**
050	**2300.050**	**2310.050**

Width [mm]	Part No. unassembled	Part No. assembled
057	**2300.057**	**2310.057**
060	**2300.060**	**2310.060**
062	**2300.062**	**2310.062**
065	**2300.065**	**2310.065**
070	**2300.070**	**2310.070**
075	**2300.075**	**2310.075**

Width [mm]	Part No. unassembled	Part No. assembled
077	**2300.077**	**2310.077**
080	**2300.080**	**2310.080**
087	**2300.087**	**2310.087**
090	**2300.090**	**2310.090**
100	**2300.100**	**2310.100**
103	**2300.103**	**2310.103**

Width [mm]	Part No. unassembled	Part No. assembled
110	**2300.110**	**2310.110**
120	**2300.120**	**2310.120**
125	**2300.125**	**2310.125**



Lean separator for even faster filling: quickly insert several layers of cables into the e-chain® and reduce the installation time by up to 50%. Measured on a 4m long e-chain® fitted with 12 cables. **1) Note: Please combine a maximum of four lean separators with one shelf. Not suitable for side-mounted e-chains®!**

Available from stock
Upon request

Product range



Part No. e-chains® with crossbars every link	Part No. e-tubes closed	*Bi* [mm]	*Ba* [mm]	E4.38L [kg/m]	R4.38L [kg/m]
E4.38L.050.□.0	R4.38L.050.□.0	50	66	≈ 1.13	≈ 1.20
E4.38L.062.□.0	–	62	78	≈ 1.19	–
E4.38L.075.□.0	R4.38L.075.□.0	75	91	≈ 1.26	≈ 1.38
E4.38L.087.□.0	–	87	103	≈ 1.30	–
E4.38L.100.□.0	R4.38L.100.□.0	100	116	≈ 1.37	≈ 1.60
E4.38L.105.□.0	–	105	121	≈ 1.39	–
E4.38L.112.□.0	–	112	128	≈ 1.44	–
E4.38L.125.□.0	R4.38L.125.□.0	125	141	≈ 1.50	≈ 1.75
E4.38L.137.□.0	–	137	153	≈ 1.55	–
E4.38L.150.□.0	R4.38L.150.□.0	150	166	≈ 1.65	≈ 1.92
E4.38L.162.□.0	–	162	178	≈ 1.69	–
E4.38L.175.□.0	R4.38L.175.□.0	175	191	≈ 1.74	≈ 2.10
E4.38L.187.□.0	–	187	203	≈ 1.80	–
E4.38L.200.□.0	R4.38L.200.□.0	200	216	≈ 1.86	≈ 2.29
E4.38L.212.□.0	–	212	228	≈ 1.90	–
E4.38L.225.□.0	–	225	241	≈ 1.97	–
E4.38L.237.□.0	–	237	253	≈ 2.05	–
E4.38L.250.□.0	R4.38L.250.□.0	250	266	≈ 2.11	≈ 2.65
E4.38L.262.□.0	–	262	278	≈ 2.15	–
E4.38L.275.□.0*	–	275	291	≈ 2.22	–
E4.38L.287.□.0*	–	287	303	≈ 2.30	–
E4.38L.300.□.0	R4.38L.300.□.0*	300	316	≈ 2.36	≈ 3.00

Available bend radii *R* [mm] | 063[1] | 075[1] | 100[1] | 125 | 150 | 175 | 200 | 250 | 300 |

*Width available upon request, please consult igus® for delivery time. 1) Radius not available for e-tubes.

Order key

E4.38L.100.150.0

Series / Type	Inner height	Width index	Bend radius	Colour index

Order example:
Complete Part No. with the required radius □. Example:
E4.38L.100.150.0 = crossbars openable along inner and outer radius, from both sides
R4.38L.100.150.0 = lids openable along inner and outer radius, from both sides
Order index for colour options ▶ **www.igus.eu/info-colours**

Available from stock
Upon request

Unsupported applications | Short travels

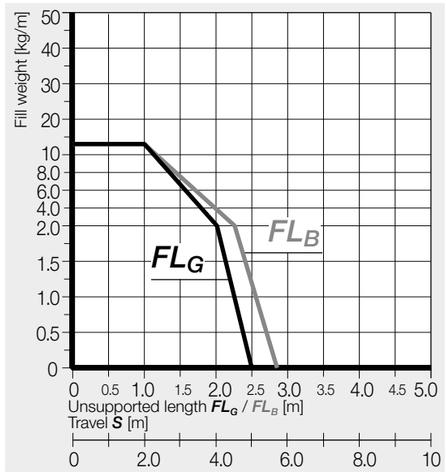

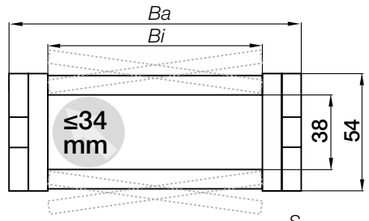

Inner height [mm]	**38**
Pitch [mm]	**56**
Links/m [pc.]	**18**
corresponds to [mm]	**1,008**
e-chain® length	$L_K = S/2 + K$

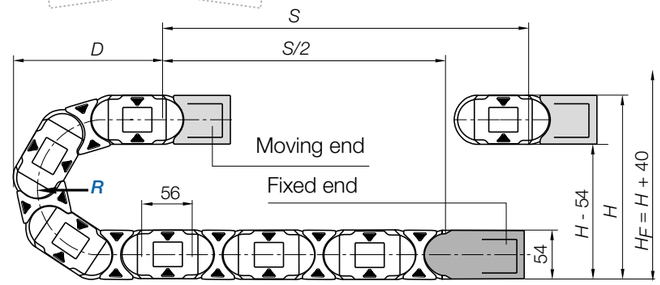

R	063[1]	075[1]	100[1]	125	150	175	200	250	300
H	180	204	254	304	354	404	454	554	654
D	174	186	211	236	261	286	311	361	411
K	310	350	430	505	585	665	745	900	1,055

The required clearance height: $H_F = H + 40$mm (with 2.0kg/m fill weight)

1) Radius not available for e-tubes.

Gliding applications | For travel lengths from 10m to max. 80m

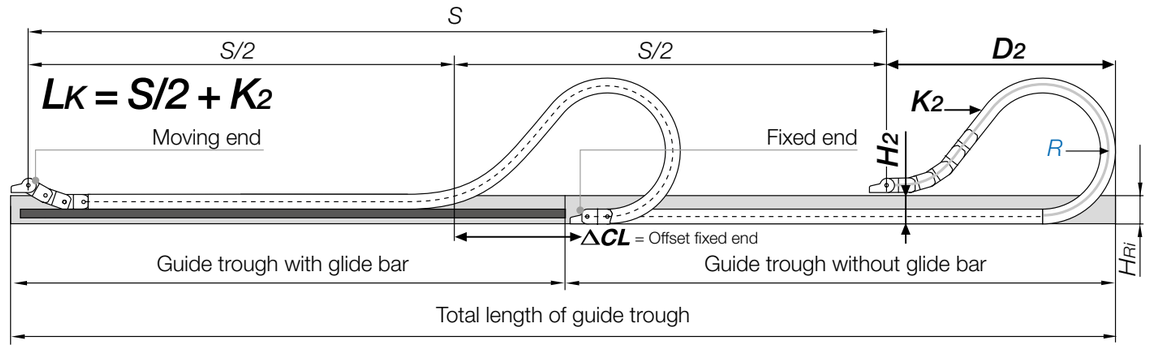

R	063[1]	075[1]	100[1]	125	150	175	200	250[2]	300[2]
H_2	180	204	96	96	96	96	96	–	–
D_2^{+25}	174	186	370	470	500	655	770	–	–
K_2	310	350	616	784	896	1,120	1,288	–	–
ΔCL	–	–	160	210	240	370	460	–	–

Note: In case of travels between 5 and 10m we recommend an e-chain® with a longer unsupported length.
1) Radius not available for e-tubes.
2) Radius not suitable for long travel applications. Please consult igus®.

Available from stock
Upon request

E4.1L **e-chains®** | Series E4.38L

KMA mounting brackets | Attachment from any side | Pivoting | Locking

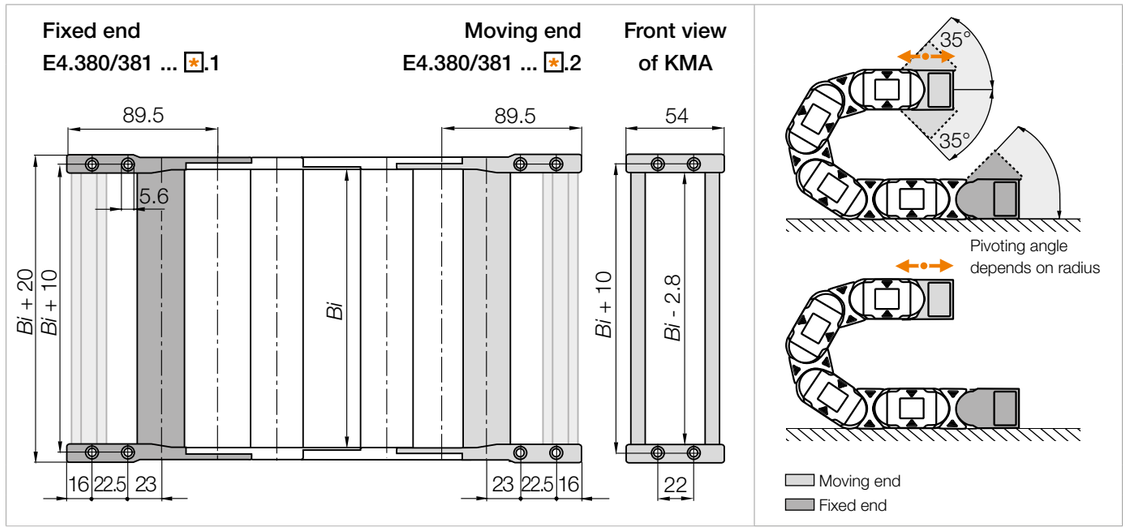

Width index	KMA full set Part No. pivoting	Part No. locking	*Bi* [mm]
050.	E4.380.050.✱.12.□	E4.381.050.✱.12.□	50
062.	E4.380.062.✱.12.□	E4.381.062.✱.12.□	62
075.	E4.380.075.✱.12.□	E4.381.075.✱.12.□	75
087.	E4.380.087.✱.12.□	E4.381.087.✱.12.□	87
100.	E4.380.100.✱.12.□	E4.381.100.✱.12.□	100
105.	E4.380.105.✱.12.□	E4.381.105.✱.12.□	105
112.	E4.380.112.✱.12.□	E4.381.112.✱.12.□	112
125.	E4.380.125.✱.12.□	E4.381.125.✱.12.□	125
137.	E4.380.137.✱.12.□	E4.381.137.✱.12.□	137
150.	E4.380.150.✱.12.□	E4.381.150.✱.12.□	150
162.	E4.380.162.✱.12.□	E4.381.162.✱.12.□	162
175.	E4.380.175.✱.12.□	E4.381.175.✱.12.□	175
187.	E4.380.187.✱.12.□	E4.381.187.✱.12.□	187
200.	E4.380.200.✱.12.□	E4.381.200.✱.12.□	200
212.	E4.380.212.✱.12.□	E4.381.212.✱.12.□	212
225.	E4.380.225.✱.12.□	E4.381.225.✱.12.□	225
237.	E4.380.237.✱.12.□	E4.381.237.✱.12.□	237
250.	E4.380.250.✱.12.□	E4.381.250.✱.12.□	250
262.	E4.380.262.✱.12.□	E4.381.262.✱.12.□	262
275.	E4.380.275.✱.12.□*	E4.381.275.✱.12.□*	275
287.	E4.380.287.✱.12.□*	E4.381.287.✱.12.□*	287
300.	E4.380.300.✱.12.□	E4.381.300.✱.12.□	300

*Width available upon request, please consult igus® for delivery time.

(KMA = polymer metal mounting bracket)

Available from stock

Upon request

E4.1L **e-tubes** | Series R4.38L

KMA mounting brackets | Attachment from any side | Pivoting | Locking

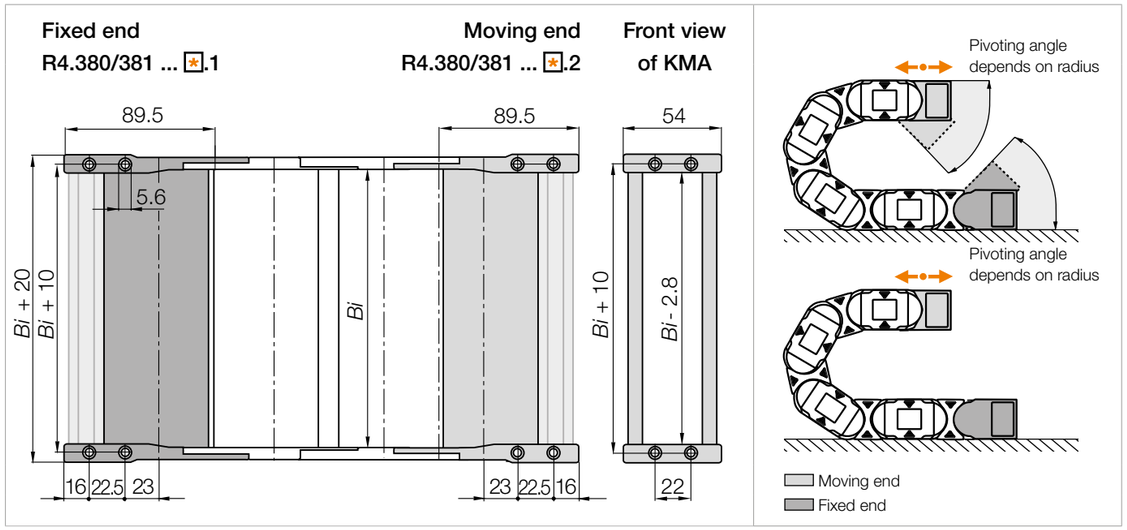

Width index	KMA full set Part No. pivoting	Part No. locking	*Bi* [mm]
050.	R4.380.050.✱.12.□	R4.381.050.✱.12.□	50
075.	R4.380.075.✱.12.□	R4.381.075.✱.12.□	75
100.	R4.380.100.✱.12.□	R4.381.100.✱.12.□	100
125.	R4.380.125.✱.12.□	R4.381.125.✱.12.□	125
150.	R4.380.150.✱.12.□	R4.381.150.✱.12.□	150
175.	R4.380.175.✱.12.□	R4.381.175.✱.12.□	175
200.	R4.380.200.✱.12.□	R4.381.200.✱.12.□	200
250.	R4.380.250.✱.12.□	R4.381.250.✱.12.□	250
300.	R4.380.300.✱.12.□*	R4.381.300.✱.12.□*	300

*Width available upon request, please consult igus® for delivery time.

(KMA = polymer metal mounting bracket)

Note ✱: The e-chains® may end with either an inner or an outer side link. An outer side link should always be the first e-chain® link at the moving end. Please specify the index 1 (for odd) or 2 (for even) depending on an even or odd number of links required.

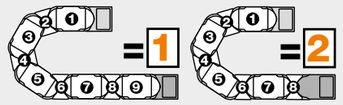

Order key

E4.380.100.2.12 .C.A2

Series	Width index	Even number of links	Full set	C-profile option	Pre-fitted

Note: Possible orientations for KMA mounting brackets. For mounting brackets pre-fitted **without strain relief**, please add index **.A**. For types pre-fitted **with strain relief** please add index **.A1**, **.A2**, **.A3** or **.A4**.



For the C-profile option please add index **.C**.

Available from stock

Upon request

E4.1L | Series E4.38L / R4.38L

Interior separation | Increase cable service life

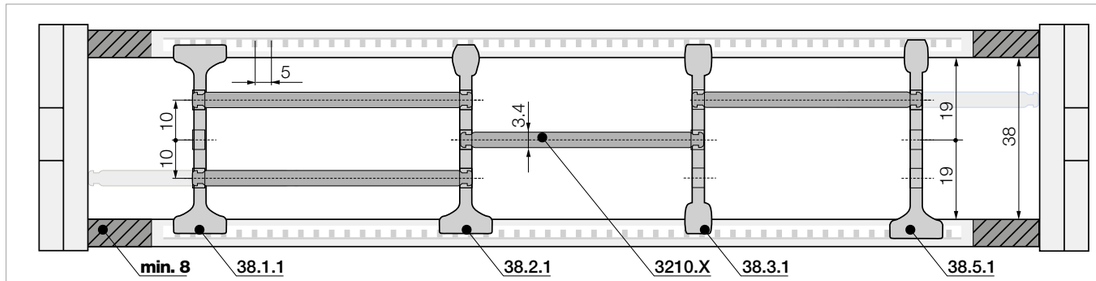

Note: Please be aware of the minimum lateral gap to the side links! **e-tube: 8mm** | **e-chain®: 8mm**
As standard separators are fitted every 2nd e-chain® link!


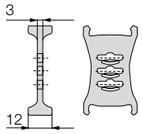

Part No.
Standard separator
unassembled **38.1**
assembled **38.1.1**

For all applications
Standard separator with a wide base for maximum holding force.


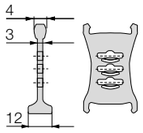

Part No. Separator, narrow top
unassembled **38.2**
assembled **38.2.1**

For even faster installation
Wide on one side for high holding force, narrow on opposite side for easy cable fitting.


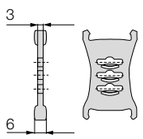

Part No.
Separator, narrow
unassembled **38.3**
assembled **38.3.1**

For a large number of thin cables
Separator with a narrow base for a large number of thin cables side by side. Saves space.


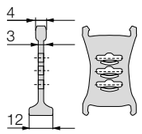

Part No.
Notch separator
unassembled **38.5**
assembled **38.5.1**

Locks securely in preset increments
Notch separator for exact positioning.
Recommended for side-mounted applications.

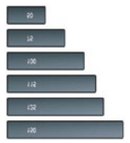
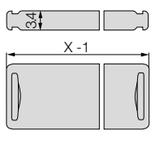

Part No.
Shelf
unassembled **3200.X**
assembled **3210.X**

Horizontal separation
Full-width shelf locks securely into separators at both ends, giving a fixed width. Can be used as full-width or modular shelving.

Width [mm]	Part No. unassembled	Part No. assembled
050	**3200.050**	**3210.050**
075	**3200.075**	**3210.075**
100	**3200.100**	**3210.100**

Width [mm]	Part No. unassembled	Part No. assembled
115	**3200.115**	**3210.115**
125	**3200.125**	**3210.125**
150	**3200.150**	**3210.150**

Width [mm]	Part No. unassembled	Part No. assembled
175	**3200.175**	**3210.175**
200	**3200.200**	**3210.200**
225	**3200.225**	**3210.225**

Width [mm]	Part No. unassembled	Part No. assembled
250	**3200.250**	**3210.250**

Available from stock
Upon request

E4.1L | Series E4.38L / R4.38L

E4.38L
R4.38L

Interior separation | To allow faster filling

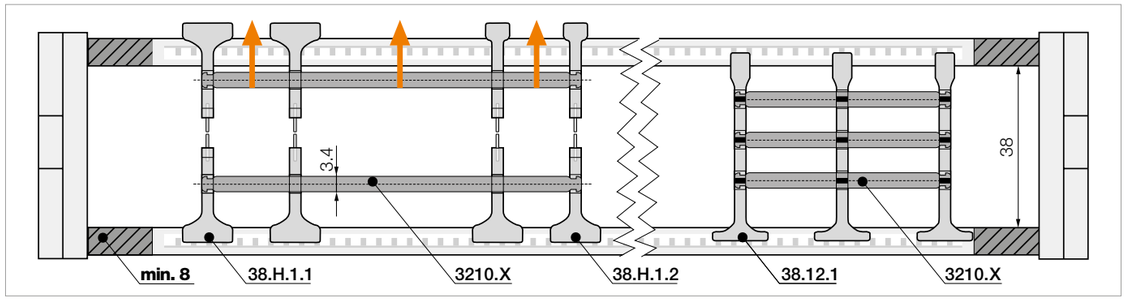

Note: Please be aware of the minimum lateral gap to the side links! **e-tube: 8mm** | **e-chain®: 8mm**
As standard separators are fitted every 2nd e-chain® link!


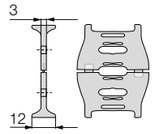

Part No.
Split separator, wide top
unassembled **38.H.1**
assembled **38.H.1.1**


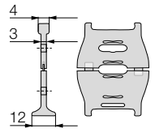

Part No.
Split separator, narrow top
unassembled **38.H.2**
assembled **38.H.2.1**

Split separators
In order to fill e-chains® more easily and effectively, these separators can be split in the middle. This allows easier access to middle shelf partitions. Fast assembly and easy retrofit. 2 types available: with wide or narrow top.


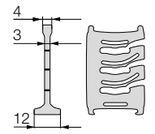

Part No.
Lean separator
unassembled **38.12**
assembled **38.12.1**

Lean separators[1)]
Quick fitting of shelves in several layers. Enables extremely fast replacement of individual cables in very full e-chains®. Only suitable for e-chains®.

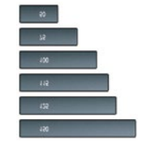
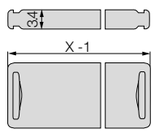

Part No.
Shelf
unassembled **3200.X**
assembled **3210.X**

Horizontal separation
Full-width shelf locks securely into separators at both ends, giving a fixed width. Can be used as full-width or modular shelving.

Width [mm]	Part No. unassembled	Part No. assembled
050	**3200.050**	**3210.050**
075	**3200.075**	**3210.075**
100	**3200.100**	**3210.100**

Width [mm]	Part No. unassembled	Part No. assembled
115	**3200.115**	**3210.115**
125	**3200.125**	**3210.125**
150	**3200.150**	**3210.150**

Width [mm]	Part No. unassembled	Part No. assembled
175	**3200.175**	**3210.175**
200	**3200.200**	**3210.200**
225	**3200.225**	**3210.225**

Width [mm]	Part No. unassembled	Part No. assembled
250	**3200.250**	**3210.250**



Lean separator for even faster filling: quickly insert several layers of cables into the e-chain® and reduce the installation time by up to 50%. Measured on a 4m long e-chain® fitted with 12 cables. **1) Note: Please combine a maximum of four lean separators with one shelf. Not suitable for side-mounted e-chains®!**

Available from stock
Upon request

Product range



Part No. e-chains® with crossbars every link	Part No. e-tubes closed	*Bi* [mm]	*Ba* [mm]	E4.48L [kg/m]	R4.48L [kg/m]
E4.48L.050.□□.0	R4.48L.050.□□.0	50	70	≈ 1.53	≈ 1.64
E4.48L.062.□□.0	R4.48L.062.□□.0	62	82	≈ 1.58	≈ 1.69
E4.48L.075.□□.0	R4.48L.075.□□.0	75	95	≈ 1.64	≈ 1.82
E4.48L.087.□□.0	–	87	107	≈ 1.67	≈ 1.91
E4.48L.100.□□.0	R4.48L.100.□□.0	100	120	≈ 1.73	≈ 2.01
E4.48L.105.□□.0	–	105	125	≈ 1.74	–
E4.48L.112.□□.0	R4.48L.112.□□.0	112	132	≈ 1.79	≈ 2.15
E4.48L.125.□□.0	R4.48L.125.□□.0	125	145	≈ 1.84	≈ 2.18
E4.48L.137.□□.0	–	137	157	≈ 1.88	–
E4.48L.150.□□.0	R4.48L.150.□□.0	150	170	≈ 1.97	≈ 2.36
E4.48L.162.□□.0	–	162	182	≈ 2.00	–

Part No. e-chains® with crossbars every link	Part No. e-tubes closed	*Bi* [mm]	*Ba* [mm]	E4.48L [kg/m]	R4.48L [kg/m]
E4.48L.175.□□.0	R4.48L.175.□□.0	175	195	≈ 2.04	≈ 2.58
E4.48L.187.□□.0	–	187	207	≈ 2.09	–
E4.48L.200.□□.0	R4.48L.200.□□.0	200	220	≈ 2.14	≈ 2.70
E4.48L.212.□□.0	–	212	232	≈ 2.18	–
E4.48L.225.□□.0	R4.48L.225.□□.0	225	245	≈ 2.24	≈ 2.97
E4.48L.237.□□.0	–	237	257	≈ 2.30	–
E4.48L.250.□□.0	R4.48L.250.□□.0	250	270	≈ 2.35	≈ 3.08
E4.48L.262.□□.0	–	262	282	≈ 2.39	–
E4.48L.275.□□.0*	–	275	295	≈ 2.45	–
E4.48L.287.□□.0*	–	287	307	≈ 2.51	–
E4.48L.300.□□.0	–	300	320	≈ 2.56	≈ 3.42

Available bend radii *R* [mm] | 075[1)] | 100[1)] | 125 | 150 | 175 | 200 | 250 | 300 | 350 |

*Width available upon request, please consult igus® for delivery time. 1) Radius not available for e-tubes.

Order key

E4.48L.175.150.0

Series / Type	Inner height	Width index	Bend radius	Colour index
E4.48L	175		150	0

Order example:
Complete Part No. with the required radius □□. Example:
E4.48L.175.150.0 = crossbars openable along inner and outer radius, from both sides
R4.48L.175.150.0 = lids openable along inner and outer radius, from both sides
Order index for colour options ▶ **www.igus.eu/info-colours**

Available from stock
Upon request

Unsupported applications | Short travels

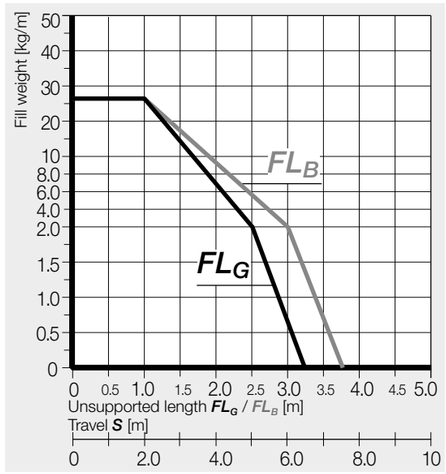

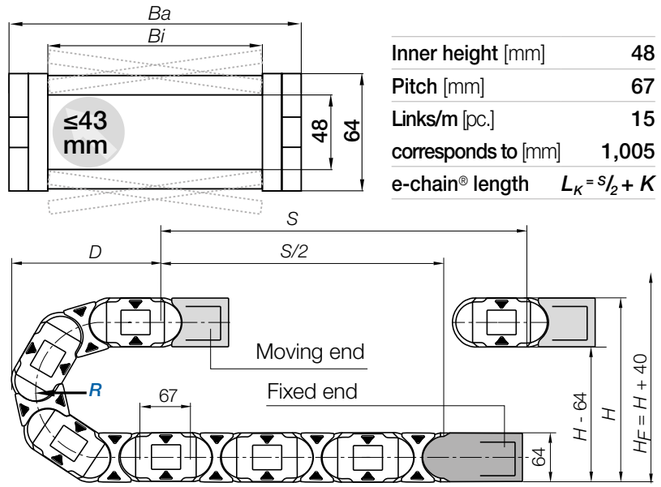

Inner height [mm]	48
Pitch [mm]	67
Links/m [pc.]	15
corresponds to [mm]	1,005
e-chain® length	$L_K = S/2 + K$

R	075[1)]	100[1)]	125	150	175	200	250	300	350
H	214	264	314	364	414	464	564	664	764
D	208	233	258	283	308	333	383	433	483
K	370	450	530	610	685	765	920	1,080	1,235

The required clearance height: $H_F = H + 40$mm (with 2.5kg/m fill weight)

1) Radius not available for e-tubes.

Gliding applications | For travel lengths from 10m to max. 100m

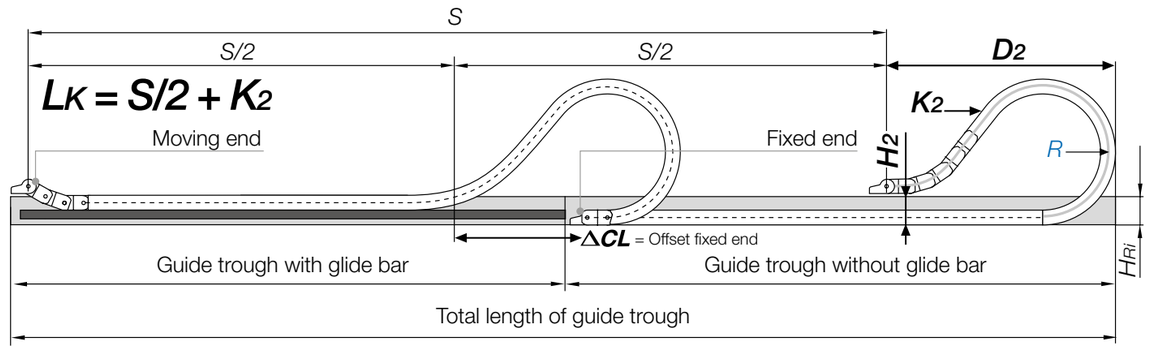

R	075[1)]	100[1)]	125	150	175	200	250	300[2)]	350[2)]
H_2	214	264	106	106	106	106	106	–	–
D_2^{+50}	208	233	475	570	670	780	1,030	–	–
K_2	370	450	804	938	1,139	1,340	1,675	–	–
ΔCL	–	–	230	300	380	460	660	–	–

Note: In case of travels between 5 and 10m we recommend an e-chain® with a longer unsupported length.

1) Radius not available for e-tubes.

2) Radius not suitable for long travel applications. Please consult igus®.

Available from stock
Upon request

E4.1L **e-chains®** | Series E4.48L

KMA mounting brackets | Attachment from any side | Pivoting | Locking

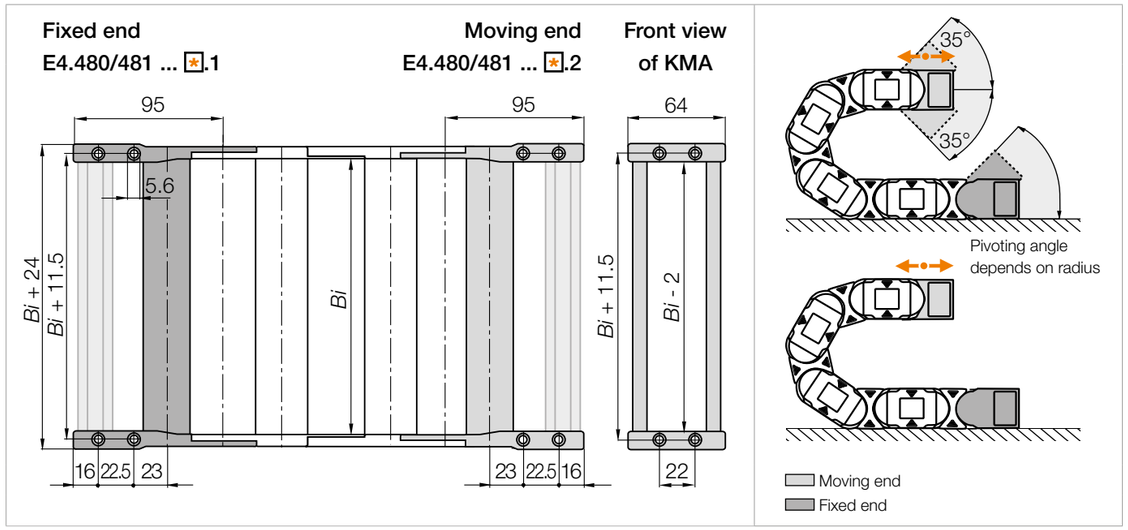

Width index	KMA full set Part No. pivoting	Part No. locking	*Bi* [mm]
050.	E4.480.050.✱.12.□	E4.481.050.✱.12.□	50
062.	E4.480.062.✱.12.□	E4.481.062.✱.12.□	62
075.	E4.480.075.✱.12.□	E4.481.075.✱.12.□	75
087	E4.480.087.✱.12.□	E4.481.087.✱.12.□	87
100.	E4.480.100.✱.12.□	E4.481.100.✱.12.□	100
105.	E4.480.105.✱.12.□	E4.481.105.✱.12.□	105
112.	E4.480.112.✱.12.□	E4.481.112.✱.12.□	112
125.	E4.480.125.✱.12.□	E4.481.125.✱.12.□	125
137.	E4.480.137.✱.12.□	E4.481.137.✱.12.□	137
150.	E4.480.150.✱.12.□	E4.481.150.✱.12.□	150
162.	E4.480.162.✱.12.□	E4.481.162.✱.12.□	162
175.	E4.480.175.✱.12.□	E4.481.175.✱.12.□	175
187.	E4.480.187.✱.12.□	E4.481.187.✱.12.□	187
200.	E4.480.200.✱.12.□	E4.481.200.✱.12.□	200
212.	E4.480.212.✱.12.□	E4.481.212.✱.12.□	212
225.	E4.480.225.✱.12.□	E4.481.225.✱.12.□	225
237.	E4.480.237.✱.12.□	E4.481.237.✱.12.□	237
250.	E4.480.250.✱.12.□	E4.481.250.✱.12.□	250
262.	E4.480.262.✱.12.□	E4.481.262.✱.12.□	262
275.	E4.480.275.✱.12.□*	E4.481.275.✱.12.□*	275
287.	E4.480.287.✱.12.□*	E4.481.287.✱.12.□*	287
300.	E4.480.300.✱.12.□	E4.481.300.✱.12.□	300

*Width available upon request, please consult igus® for delivery time.
(KMA = polymer metal mounting bracket)

Available from stock
Upon request

E4.1L **e-tubes** | Series R4.48L

KMA mounting brackets | Attachment from any side | Pivoting | Locking

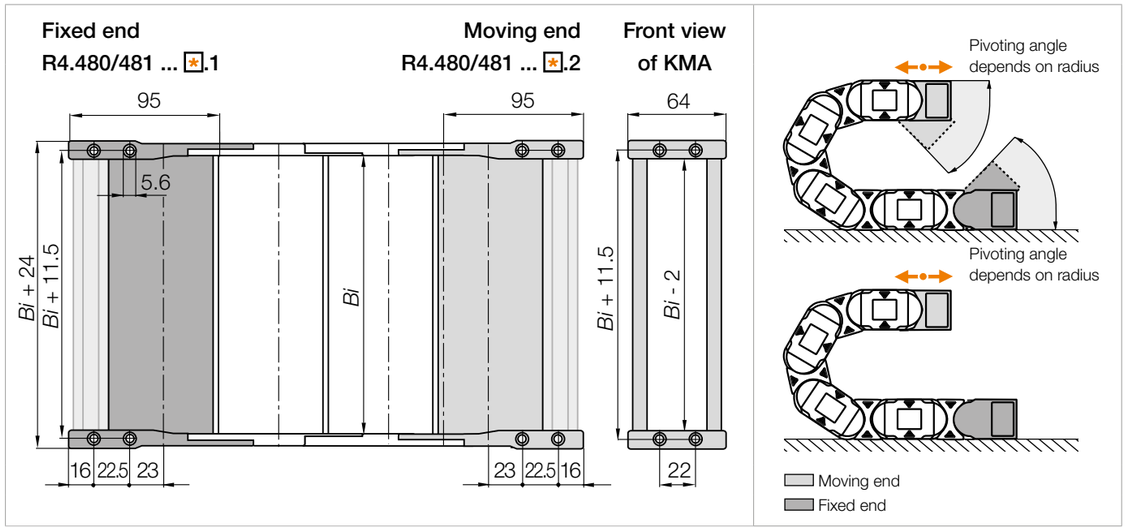

Width index	KMA full set Part No. pivoting	Part No. locking	*Bi* [mm]
050.	R4.480.050.✱.12.□	R4.481.050.✱.12.□	50
062.	R4.480.062.✱.12.□	R4.481.062.✱.12.□	62
075.	R4.480.075.✱.12.□	R4.481.075.✱.12.□	75
100.	R4.480.100.✱.12.□	R4.481.100.✱.12.□	100
112.	R4.480.112.✱.12.□	R4.481.112.✱.12.□	112
125.	R4.480.125.✱.12.□	R4.481.125.✱.12.□	125
150.	R4.480.150.✱.12.□	R4.481.150.✱.12.□	150
175.	R4.480.175.✱.12.□	R4.481.175.✱.12.□	175
225.	R4.480.200.✱.12.□	R4.481.200.✱.12.□	225
200.	R4.480.225.✱.12.□	R4.481.225.✱.12.□	200
250.	R4.480.250.✱.12.□	R4.481.250.✱.12.□	250

*Width available upon request, please consult igus® for delivery time.
(KMA = polymer metal mounting bracket)

Note ✱: The e-chains® may end with either an inner or an outer side link. An outer side link should always be the first e-chain® link at the moving end. Please specify the index 1 (for odd) or 2 (for even) depending on an even or odd number of links required.

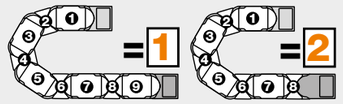

Order key

E4.480.175.2.12.C.A2

Series	Width index	Even number of links	Full set	C-profile option	Pre-fitted

Note: Possible orientations for KMA mounting brackets. For mounting brackets pre-fitted **without strain relief**, please add index **.A**. For types pre-fitted **with strain relief** please add index **.A1**, **.A2**, **.A3** or **.A4**.



For the C-profile option please add index **.C**.

Available from stock
Upon request

E4.1L | Series E4.48L / R4.48L

Interior separation | Increase cable service life

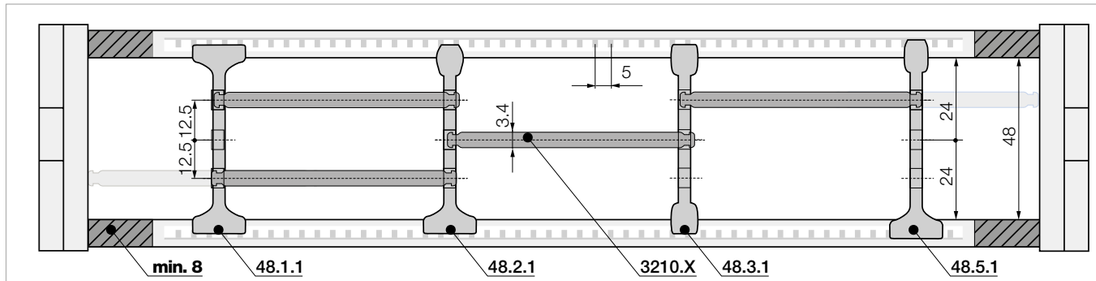

Note: Please be aware of the minimum lateral gap to the side links! **e-tube: 8mm** | **e-chain®: 8mm**
As standard separators are fitted every 2nd e-chain® link!



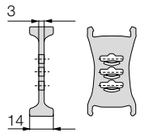

Part No. Standard separator	
unassembled	**48.1**
assembled	**48.1.1**

For all applications
Standard separator with a wide base for maximum holding force.



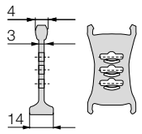

Part No. Separator, narrow top	
unassembled	**48.2**
assembled	**48.2.1**

For even faster installation
Wide on one side for high holding force, narrow on opposite side for easy cable fitting.



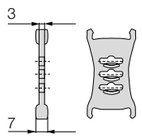

Part No. Separator, narrow	
unassembled	**48.3**
assembled	**48.3.1**

For a large number of thin cables
Separator with a narrow base for a large number of thin cables side by side. Saves space.



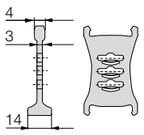

Part No. Notch separator	
unassembled	**48.5**
assembled	**48.5.1**

Locks securely in preset increments
Notch separator for exact positioning.
Recommended for side-mounted applications.

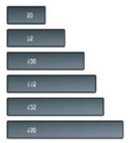

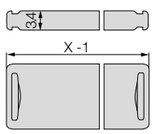

Part No. Shelf	
unassembled	**3200.X**
assembled	**3210.X**

Horizontal separation
Full-width shelf locks securely into separators at both ends, giving a fixed width. Can be used as full-width or modular shelving.

Width [mm]	Part No. unassembled	Part No. assembled
050	**3200.050**	**3210.050**
075	**3200.075**	**3210.075**
100	**3200.100**	**3210.100**

Width [mm]	Part No. unassembled	Part No. assembled
115	**3200.115**	**3210.115**
125	**3200.125**	**3210.125**
150	**3200.150**	**3210.150**

Width [mm]	Part No. unassembled	Part No. assembled
175	**3200.175**	**3210.175**
200	**3200.200**	**3210.200**
225	**3200.225**	**3210.225**

Width [mm]	Part No. unassembled	Part No. assembled
250	**3200.250**	**3210.250**

Available from stock
Upon request

E4.1L | Series E4.48L / R4.48L

E4.48L
R4.48L

Interior separation | To allow faster filling

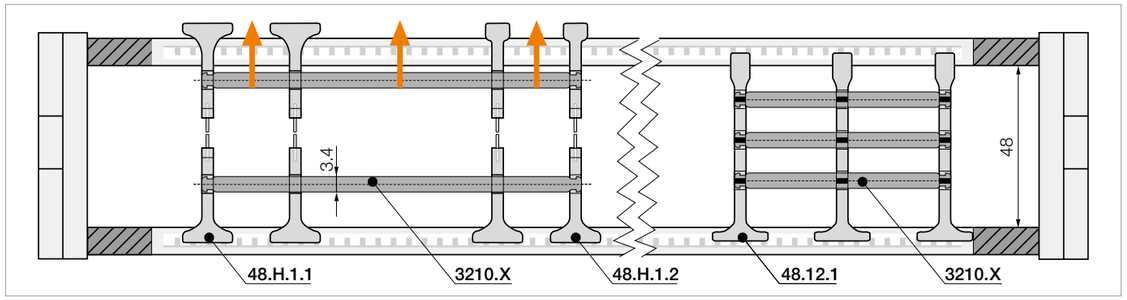

Note: Please be aware of the minimum lateral gap to the side links! **e-tube: 8mm** | **e-chain®: 8mm**
As standard separators are fitted every 2nd e-chain® link!



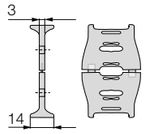

Part No. Split separator, wide top	
unassembled	**48.H.1**
assembled	**48.H.1.1**



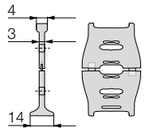

Part No. Split separator, narrow top	
unassembled	**48.H.2**
assembled	**48.H.2.1**

Split separators
In order to fill e-chains® more easily and effectively, these separators can be split in the middle. This allows easier access to middle shelf partitions. Fast assembly and easy retrofit. 2 types available: with wide or narrow top.



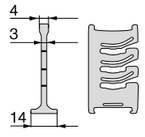

Part No. Lean separator	
unassembled	**48.12**
assembled	**48.12.1**

Lean separators[1)]
Quick fitting of shelves in several layers. Enables extremely fast replacement of individual cables in very full e-chains®. Only suitable for e-chains®.

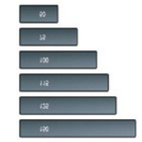

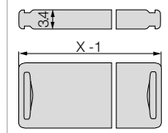

Part No. Shelf	
unassembled	**3200.X**
assembled	**3210.X**

Horizontal separation
Full-width shelf locks securely into separators at both ends, giving a fixed width. Can be used as full-width or modular shelving.

Width [mm]	Part No. unassembled	Part No. assembled
050	**3200.050**	**3210.050**
075	**3200.075**	**3210.075**
100	**3200.100**	**3210.100**

Width [mm]	Part No. unassembled	Part No. assembled
115	**3200.115**	**3210.115**
125	**3200.125**	**3210.125**
150	**3200.150**	**3210.150**

Width [mm]	Part No. unassembled	Part No. assembled
175	**3200.175**	**3210.175**
200	**3200.200**	**3210.200**
225	**3200.225**	**3210.225**

Width [mm]	Part No. unassembled	Part No. assembled
250	**3200.250**	**3210.250**



Lean separator for even faster filling: quickly insert several layers of cables into the e-chain® and reduce the installation time by up to 50%. Measured on a 4m long e-chain® fitted with 12 cables. **1) Note: Please combine a maximum of four lean separators with one shelf. Not suitable for side-mounted e-chains®!**

Available from stock
Upon request

E4.1L | Series E4.64L

Product range

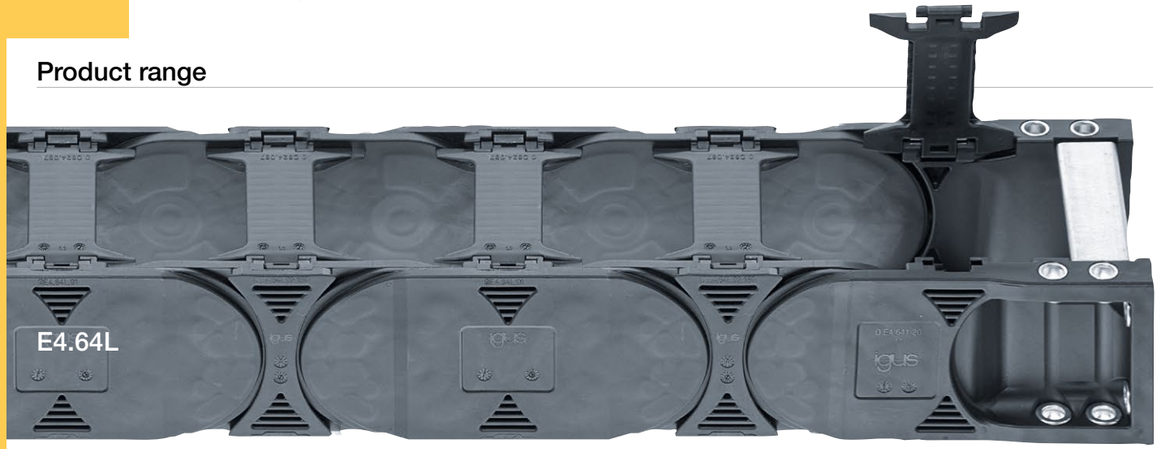

Part No. e-chains® with crossbars every link	Bi [mm]	Ba [mm]	E4.64L [kg/m]
E4.64L.075.□.0	75	101	≈ 2.47
E4.64L.087.□.0	87	113	≈ 2.54
E4.64L.100.□.0	100	126	≈ 2.57
E4.64L.112.□.0	112	138	≈ 2.63
E4.64L.125.□.0	125	151	≈ 2.67
E4.64L.137.□.0	137	163	≈ 2.72
E4.64L.150.□.0	150	176	≈ 2.77
E4.64L.175.□.0	175	201	≈ 2.87

Part No. e-chains® with crossbars every link	Bi [mm]	Ba [mm]	E4.64L [kg/m]
E4.64L.187.□.0	187	213	≈ 2.93
E4.64L.200.□.0	200	226	≈ 2.97
E4.64L.212.□.0	212	238	≈ 3.03
E4.64L.225.□.0	225	251	≈ 3.08
E4.64L.250.□.0	250	276	≈ 3.18
E4.64L.300.□.0	300	326	≈ 3.38
E4.64L.325.□.0	325	351	≈ 3.48
E4.64L.350.□.0	350	376	≈ 3.58

Available bend radii *R* [mm] | 100[1)] | 125 | 150 | 175 | 200 | 250 | 300 | 350 | 400 |

1) Radius available upon request, please consult igus® for delivery time.

Order key

E4.64L.150.150.0

Series / Type	Inner height	Width index	Bend radius	Colour index

Order example:
Complete Part No. with the required radius □. Example:
E4.64L.150.150.0 = crossbars openable along inner and outer radius, from both sides
Order index for colour options ▶ **www.igus.eu/info-colours**

Available from stock
Upon request

E4.1L | Series E4.64L

Unsupported applications | Short travels

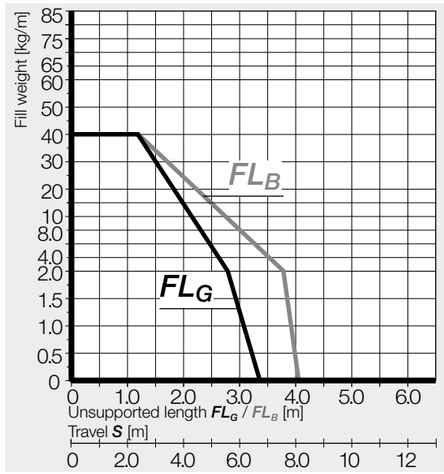

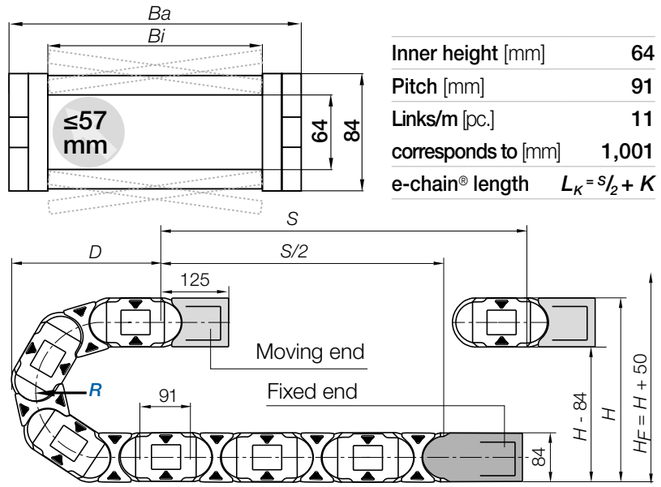

Inner height [mm]	64
Pitch [mm]	91
Links/m [pc.]	11
corresponds to [mm]	1,001
e-chain® length	$L_K = S/2 + K$

R	100[1)]	125	150	175	200	250	300	350	400
H	284	334	384	434	484	584	684	784	884
D	279	304	329	354	379	429	479	529	579
K	500	575	655	735	815	970	1,125	1,285	1,440

The required clearance height: $H_F = H + 50$mm (with 2.0kg/m fill weight)

1) Radius available upon request, please consult igus® for delivery time.

Gliding applications | For long travels, upon request

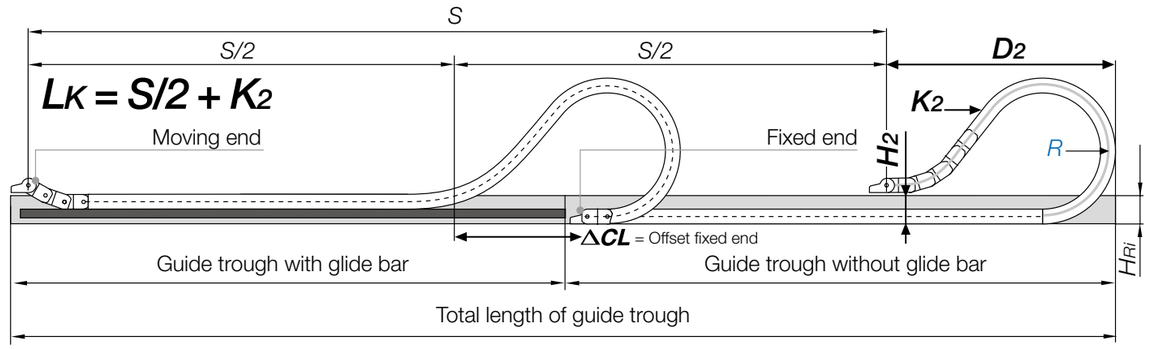

R	100[1)]	125	150	175	200	250	300	350	400
H_2	2)	180	180	180	180	180	–	–	–
D_2^{+50}	2)	505	580	705	830	1,080	–	–	–
K_2	2)	819	910	1,183	1,365	1,729	–	–	–
ΔCL	2)	209	259	359	459	570	–	–	–

Note: In case of travels between 5 and 10m we recommend an e-chain® with a longer unsupported length.

1) Radius available upon request, please consult igus® for delivery time.

2) Values upon request

Available from stock
Upon request

KMA mounting brackets | Attachment from any side | Pivoting | Locking

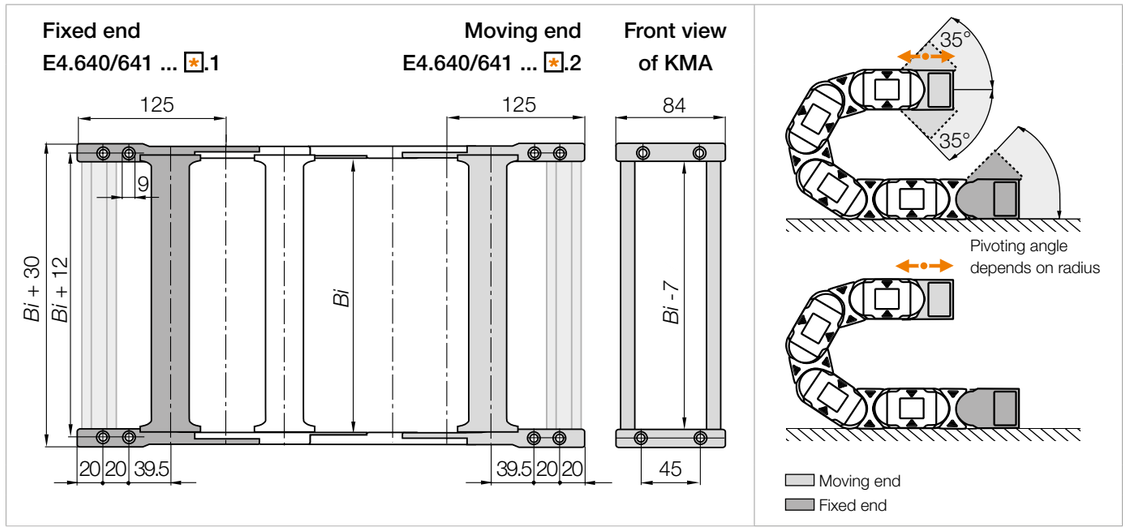

Width index	KMA full set Part No. pivoting	Part No. locking	Bi [mm]
075.	E4.640.075.✱.12.☐	E4.641.075.✱.12.☐	75
087.	E4.640.087.✱.12.☐	E4.641.087.✱.12.☐	87
100.	E4.640.100.✱.12.☐	E4.641.100.✱.12.☐	100
112.	E4.640.112.✱.12.☐	E4.641.112.✱.12.☐	112
125.	E4.640.125.✱.12.☐	E4.641.125.✱.12.☐	125
137.	E4.640.137.✱.12.☐	E4.641.137.✱.12.☐	137
150.	E4.640.150.✱.12.☐	E4.641.150.✱.12.☐	150
175.	E4.640.175.✱.12.☐	E4.641.175.✱.12.☐	175

Width index	KMA full set Part No. pivoting	Part No. locking	Bi [mm]
187.	E4.640.187.✱.12.☐	E4.641.187.✱.12.☐	187
200.	E4.640.200.✱.12.☐	E4.641.200.✱.12.☐	200
212.	E4.640.212.✱.12.☐	E4.641.212.✱.12.☐	212
225.	E4.640.225.✱.12.☐	E4.641.225.✱.12.☐	225
250.	E4.640.250.✱.12.☐	E4.641.250.✱.12.☐	250
300.	E4.640.300.✱.12.☐	E4.641.300.✱.12.☐	300
325.	E4.640.325.✱.12.☐	E4.641.325.✱.12.☐	325
350.	E4.640.350.✱.12.☐	E4.641.350.✱.12.☐	350

*Width available upon request, please consult igus® for delivery time.
(KMA = polymer metal mounting bracket)

Available from stock
Upon request

E4.1L e-chains® | Series E4.64L

E4.64L

KMA mounting brackets | Attachment from any side | Pivoting | Locking

Note ✱: The e-chains® may end with either an inner or an outer side link. An outer side link should always be the first e-chain® link at the moving end. Please specify the index 1 (for odd) or 2 (for even) depending on an even or odd number of links required.

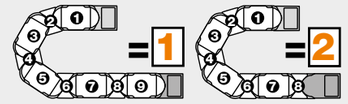

Order key

E4.640.150.2.12 .C.A2

Series	Width index	Even number of links	Full set	C-profile option	Pre-fitted

Note: Possible orientations for KMA mounting brackets. For mounting brackets pre-fitted **without strain relief**, please add index **.A**. For types pre-fitted **with strain relief** please add index **.A1**, **.A2**, **.A3** or **.A4**.



For the C-profile option please add index **.C**.

Available from stock
Upon request

Interior separation | Increase cable service life

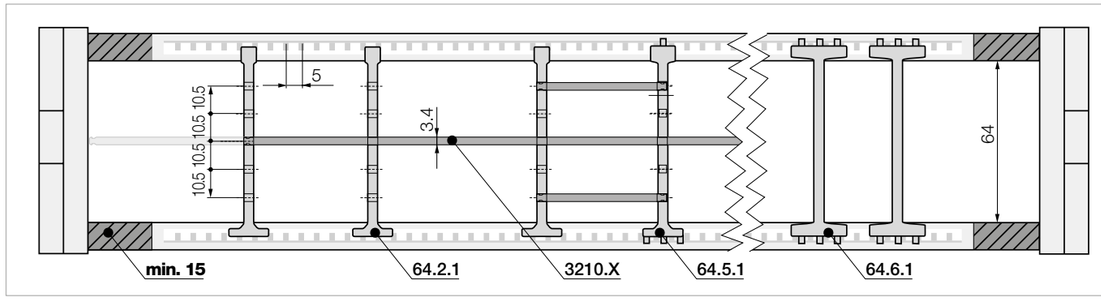

Note: Please be aware of the minimum lateral gap to the side links! **e-chain®: 15mm**
As standard separators are fitted every 2nd e-chain® link!



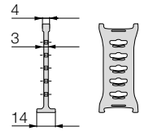

Part No. Separator, narrow top	
unassembled	**64.2**
assembled	**64.2.1**

For even faster installation

Wide on one side for high holding force, narrow on opposite side for easy cable fitting.



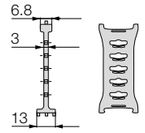

Part No. Notch separator	
unassembled	**64.5**
assembled	**64.5.1**

Locks securely in preset increments

Notch separator for exact positioning.
Recommended for side-mounted applications.

Part No. Shelf	
unassembled	**3200.X**
assembled	**3210.X**

Horizontal separation

Full-width shelf locks securely into separators at both ends, giving a fixed width. Can be used as full-width or modular shelving.

Width [mm]	Part No. unassembled	Part No. assembled
050	**3200.050**	**3210.050**
075	**3200.075**	**3210.075**
100	**3200.100**	**3210.100**

Width [mm]	Part No. unassembled	Part No. assembled
115	**3200.115**	**3210.115**
125	**3200.125**	**3210.125**
150	**3200.150**	**3210.150**

Width [mm]	Part No. unassembled	Part No. assembled
175	**3200.175**	**3210.175**
200	**3200.200**	**3210.200**
225	**3200.225**	**3210.225**

Width [mm]	Part No. unassembled	Part No. assembled
250	**3200.250**	**3210.250**

More interior separation options



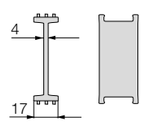

Part No. Notch locking separator	
unassembled	**64.6**
assembled	**64.6.1**

Notch locking separator for increased holding force

For higher crossbar opening forces for high humidity and/or large hydraulic hoses. They can be positioned precisely and then locked in position.

Available from stock
Upon request

Interior separation | To allow faster filling

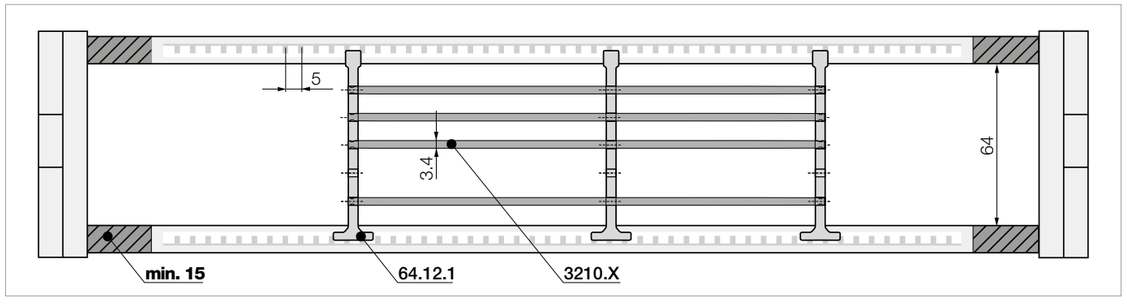

Note: Please be aware of the minimum lateral gap to the side links! **e-chain®: 15mm**
As standard separators are fitted every 2nd e-chain® link!



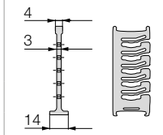

Part No. Lean separator	
unassembled	**64.12**
assembled	**64.12.1**

Lean separators[1)]

Quick fitting of shelves in several layers. Enables extremely fast replacement of individual cables in very full e-chains®. Only suitable for e-chains®.



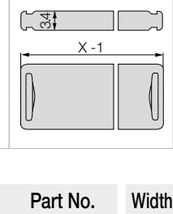

Part No. Shelf	
unassembled	**3200.X**
assembled	**3210.X**

Horizontal separation

Full-width shelf locks securely into separators at both ends, giving a fixed width. Can be used as full-width or modular shelving.

Width [mm]	Part No. unassembled	Part No. assembled
050	**3200.050**	**3210.050**
075	**3200.075**	**3210.075**
100	**3200.100**	**3210.100**

Width [mm]	Part No. unassembled	Part No. assembled
115	**3200.115**	**3210.115**
125	**3200.125**	**3210.125**
150	**3200.150**	**3210.150**

Width [mm]	Part No. unassembled	Part No. assembled
175	**3200.175**	**3210.175**
200	**3200.200**	**3210.200**
225	**3200.225**	**3210.225**

Width [mm]	Part No. unassembled	Part No. assembled
250	**3200.250**	**3210.250**



Lean separator for even faster filling: quickly insert several layers of cables into the e-chain® and reduce the installation time by up to 50%. Measured on a 4m long e-chain® fitted with 12 cables. **1) Note: Please combine a maximum of four lean separators with one shelf. Not suitable for side-mounted e-chains®!**

Available from stock
Upon request

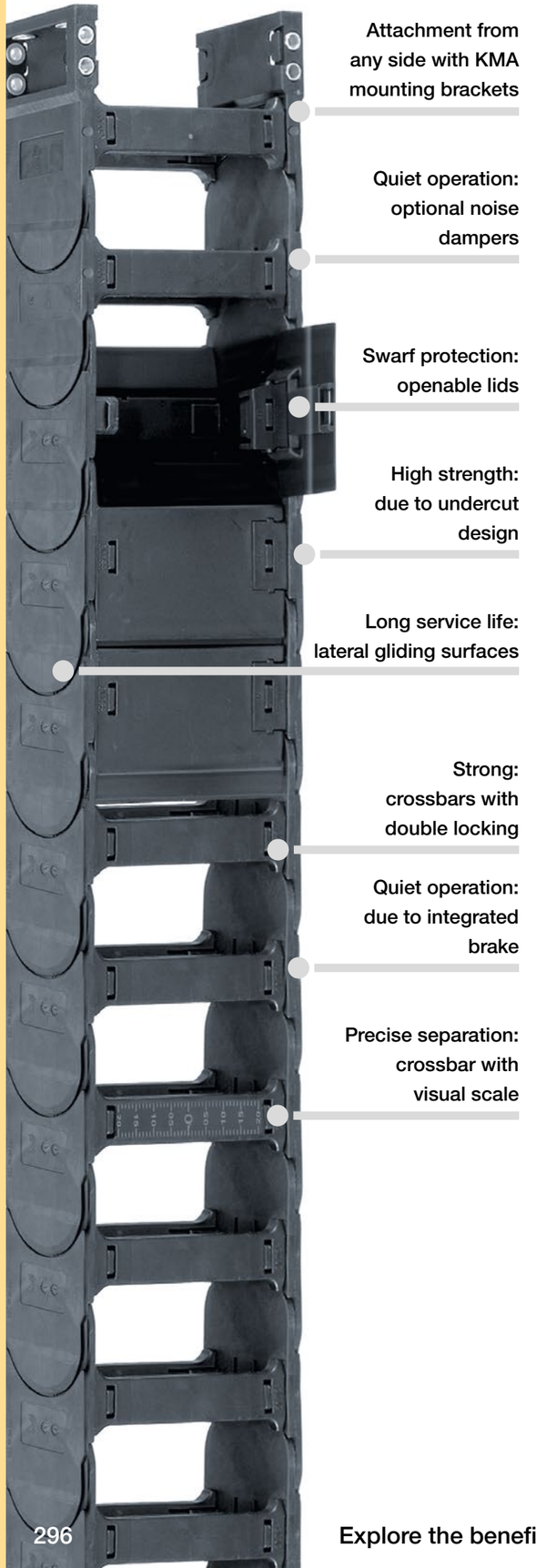

Low weight and cost-effective - E4/light

Weight reduction, a larger interior space and a reduced price. The characteristics of the igus® E4/light system: thinner side links (for all series) and a thinner crossbar (for some series: 14240, 14340). E4/light e-chains® offer an optimum price/performance ratio for many applications. Especially for short travels, hanging and small standing applications. E4/light types are often first choice.

Benefits

- Large inner heights combined with low weight
- E4/light e-chains® offer optimum price and performance solutions for many applications
- Especially suitable for short travel distances, hanging and standing designs

Typical application areas

- Machine tools
- Material handling
- Stone cutting machines
- Woodworking
- Machines
- Vehicles
- Construction machinery
- Limited application for long travel distances
- General machinery, etc.

Selection table

Part No.	Inner height *hi* [mm]	Outer height *ha* [mm]	Inner width *Bi* [mm]	Outer width *Ba* [mm]	Bend radius *R* [mm]	Unsupported length ≤ [m]	Page
E4/light - e-chains® with crossbars every link							
The all-rounder, for heavy-duty applications.							
14040	56	84	50 - 600	76 - 626	135 - 500	4.0	**298**
14240	62	84	50 - 400	76 - 426	135 - 500	4.0	**304**
14550	70	98	50 - 600	77 - 627	150 - 600	4.2	**310**
15050	80	108	50 - 600	80 - 630	150 - 600	4.6	**316**
15250	86	108	50 - 400	80 - 430	150 - 600	4.6	**322**
1640	112	140	50 - 600	84 - 634	200 - 600	4.5	**328**
E4/light - e-chains® with crossbars every 2nd link							
The cost-effective, easy-to-install alternative for almost any application.							
14140	56	84	50 - 600	76 - 626	135 - 500	4.0	**298**
14340	62	84	50 - 400	76 - 426	135 - 500	4.0	**304**
14650	70	98	50 - 600	77 - 627	150 - 600	4.2	**310**
15150	80	108	50 - 600	80 - 630	150 - 600	4.6	**316**
15350	86	108	50 - 400	80 - 430	150 - 600	4.6	**322**
E4/light - e-tubes fully enclosed							
Excellent cable protection							
R18840	56	84	75 - 462	101 - 489	150 - 500	4.0	**298**
R19050	70	98	75 - 462	102 - 489	200 - 600	4.2	**310**
R19850	80	108	75 - 462	105 - 493	200 - 500	4.6	**316**
R1608	108	140	200 - 500	234 - 534	250 - 600	4.5	**328**

Technical data

General properties	
Speed gliding / acceleration gliding	≤ 5m/s / ≤ 50m/s²
Speed FL_G/acceleration FL_G	≤ 20m/s / ≤ 200m/s²
Speed FL_B/acceleration FL_B	≤ 3m/s / ≤ 6m/s²
igumid® G LW material - permitted temperature °C	-40°C/+120°C
Flammability class, igumid® G LW	VDE 0304 IIC UL94-HB

Installation types, maximum travel lengths

Series	Unsupported	Gliding	Vertical hanging	Vertical standing	Side mounted, unsupported	Rotary	Zig-zag
14040	≤ 8.0m	≤ 150m	≤ 80m	≤ 6.0m	≤ 2.0m	with rework	upon request
14240	≤ 8.0m	≤ 150m	≤ 80m	≤ 6.0m	≤ 2.0m	with rework	upon request
14550	≤ 8.4m	≤ 250m	≤ 90m	≤ 6.0m	≤ 2.0m	with rework	upon request
15050	≤ 9.2m	≤ 250m	≤ 100m	≤ 6.0m	≤ 2.0m	with rework	upon request
15250	≤ 9.2m	≤ 250m	≤ 100m	≤ 6.0m	≤ 2.0m	with rework	upon request
1640	≤ 9.0m	≤ 400m	≤ 100m	≤ 5.0m	≤ 2.0m	with rework	upon request

Product range

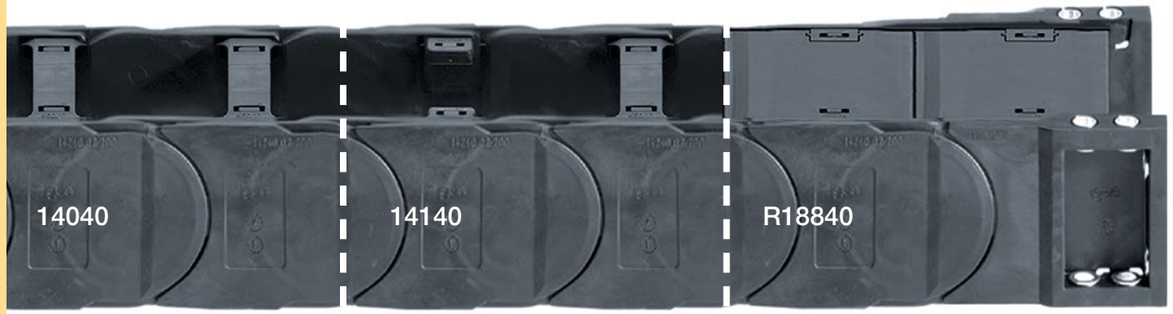

e-chains® with crossbars every link	e-chains® with crossbars every 2nd link	e-tubes closed		Bi [mm]	Ba [mm]	14040 [kg/m]	14140 [kg/m]	R18840 [kg/m]
14040.	14140.	–	05.□.0	50	76	≈ 2.47	≈ 2.48	–
14040.	14140.	–	055.□.0	55	81	≈ 2.57	≈ 2.50	–
14040.	14140.	–	06.□.0	65	91	≈ 2.66	≈ 2.51	–
14040.	14140.	18840.[1]	07.□.0	75	101	≈ 2.75	≈ 2.25	≈ 3.20
14040.	14140.	–	08.□.0	87	113	≈ 2.84	≈ 2.44	–
14040.	14140.	18840.	10.□.0	100	126	≈ 2.93	≈ 2.61	≈ 3.49
14040.	14140.	–	11.□.0	112	139	≈ 3.06	≈ 2.67	–
14040.	14140.	18840.	12.□.0	125	151	≈ 3.12	≈ 2.71	≈ 3.85
14040.	14140.	–	13.□.0	137	164	≈ 3.26	≈ 2.77	–
14040.	14140.	18840.	15.□.0	150	176	≈ 3.32	≈ 2.81	≈ 4.28
14040.	14140.	–	16.□.0	162	189	≈ 3.43	≈ 2.86	–
14040.	14140.	–	169.□.0	169	196	≈ 3.51	≈ 2.90	–
14040.	14140.	18840.	17.□.0	175	201	≈ 3.54	≈ 2.92	≈ 4.54
14040.	14140.	–	182.□.0	182	209	≈ 3.58	≈ 2.94	–
14040.	14140.	–	18.□.0	187	214	≈ 3.65	≈ 2.97	–
14040.	14140.	18840.	20.□.0	200	226	≈ 3.67	≈ 2.98	≈ 4.85
14040.	14140.	–	207.□.0	207	234	≈ 3.73	≈ 3.01	–
14040.	14140.	–	21.□.0	212	239	≈ 3.78	≈ 3.04	–
14040.	14140.	–	22.□.0	225	251	≈ 3.85	≈ 3.07	–
14040.	14140.	–	23.□.0	237	264	≈ 3.98	≈ 3.14	–
14040.	14140.	18840.	25.□.0	250	276	≈ 4.07	≈ 3.18	≈ 5.58
14040.	14140.	–	26.□.0	262	289	≈ 4.16	≈ 3.22	–
14040.	14140.	18840.	27.□.0	275	301	≈ 4.27	≈ 3.28	≈ 5.85

e-chains® with crossbars every link	e-chains® with crossbars every 2nd link	e-tubes closed		Bi [mm]	Ba [mm]	14040 [kg/m]	14140 [kg/m]	R18840 [kg/m]
14040.	14140.	–	28.□.0	287	314	≈ 4.29	≈ 3.29	–
14040.	14140.	18840.	30.□.0	300	326	≈ 4.51	≈ 3.40	≈ 6.24
14040.	14140.	–	31.□.0	312	339	≈ 4.57	≈ 3.42	–
14040.	14140.	–	32.□.0	325	351	≈ 4.60	≈ 3.44	–
14040.	14140.	–	33.□.0	337	364	≈ 4.77	≈ 3.53	–
14040.	14140.	18840.	35.□.0	350	376	≈ 4.93	≈ 3.61	≈ 6.99
14040.	14140.	–	36.□.0	362	389	≈ 4.94	≈ 3.61	–
14040.	14140.	–	37.□.0	375	401	≈ 4.95	≈ 3.62	–
14040.	14140.	–	38.□.0	387	414	≈ 5.04	≈ 3.66	–
14040.	14140.	18840.	40.□.0	400	426	≈ 5.24	≈ 3.76	≈ 7.94
14040.	14140.	–	41.□.0	412	439	≈ 5.39	≈ 3.84	–
14040.	14140.	–	42.□.0	425	451	≈ 5.54	≈ 3.92	–
14040.	14140.	–	43.□.0	437	464	≈ 5.61	≈ 3.95	–
14040.	14140.	–	45.□.0	450	476	≈ 5.68	≈ 3.98	–
14040.	14140.	18840.	46.□.0	462	489	≈ 5.70	≈ 3.99	≈ 8.40
14040.	14140.	–	47.□.0	475	501	≈ 5.83	≈ 4.06	–
14040.	14140.	–	48.□.0	487	514	≈ 5.86	≈ 4.08	–
14040.	14140.	–	50.□.0	500	526	≈ 5.96	≈ 4.13	–
14040.	14140.	–	51.□.0	512	539	≈ 5.98	≈ 4.14	–
14040.	14140.	–	52.□.0	525	551	≈ 6.03	≈ 4.16	–
14040.	14140.	–	53.□.0	537	564	≈ 6.18	≈ 4.24	–
14040.	14140.	–	55.□.0	550	576	≈ 6.67	≈ 4.48	–
14040.	14140.	–	60.□.0	600	626	≈ 6.98	≈ 4.58	–

Available bend radii *R* [mm] | 135* | 150 | 175 | 200 | 250 | 300 | 400 | 500 |

*Radius not available for e-tubes. 1) Lid removable, non-openable

Order key

14140.30.150.0

Series	Width index	Bend radius	Colour index

Order example:
Complete Part No. with the required radius □. Example:
14040.30.150.0 = crossbars removable along the inner and outer radius
14140.30.150.0 = crossbars removable along the inner and outer radius
18840.30.150.0 = lids openable along the outer radius from one side
Order index for colour options ▶ **www.igus.eu/info-colours**

Unsupported applications | Short travels

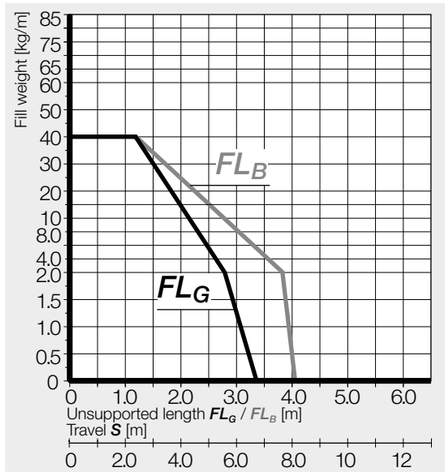

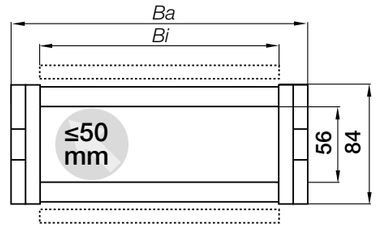

Inner height [mm]	56
Pitch [mm]	91
Links/m [pc.]	11
corresponds to [mm]	1,001
e-chain® length	$L_K = S/2 + K$

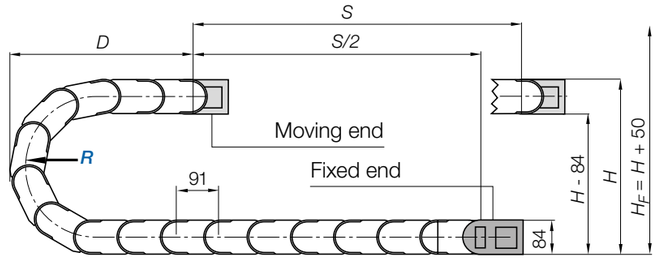

R	135*	150	175	200	250	300	400	500
H_{+25}^{0}	354	384	434	484	584	684	884	1,084
D	314	329	354	379	429	479	579	679
K	610	655	735	815	970	1,125	1,440	1.755

The required clearance height: $H_F = H + 50$mm (with 2.0kg/m fill weight)

* Radius not available for e-tubes.

Gliding applications | For travel lengths from 12m to max. 150m

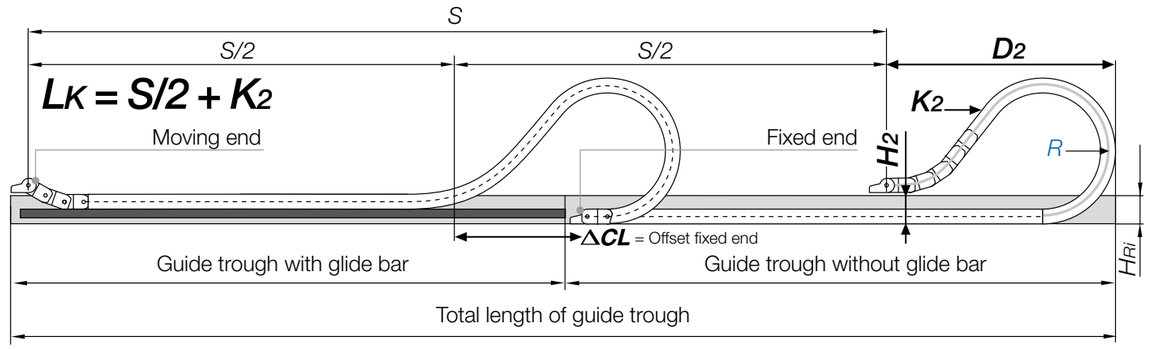

R	135*	150	175	200	250	300	400	500
H_2	266	266	266	266	266	266	266	266
D_2^{+50}	390	450	530	710	920	1,120	1,530	1,830
K_2	728	819	1,001	1,274	1,638	1,911	2,548	3,185
ΔCL	124	159	209	359	509	659	959	1,159

Note: In case of travels between 8 and 12m we recommend an e-chain® with a longer unsupported length.

* Radius not available for e-tubes.

Available from stock
Upon request

KMA mounting brackets | Attachment from any side | Pivoting | Locking

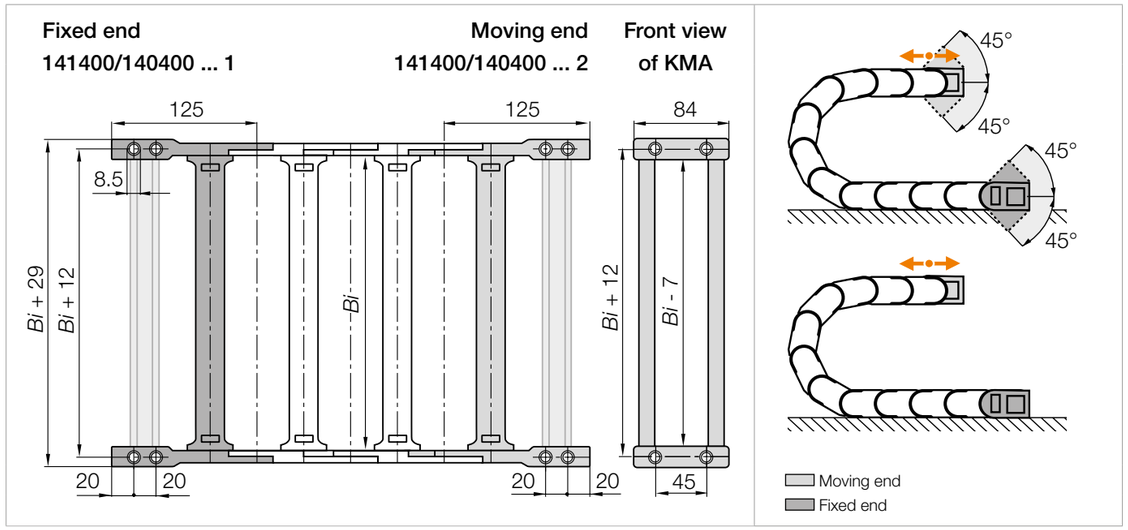

Width index	KMA full set		
	Part No. pivoting	Part No. locking	*Bi* [mm]
05.	**141400.05. 12.☐**	**140400.05. 12.☐**	50
055.	**141400.055.12.☐**	**140400.055.12.☐**	55
06.	**141400.06. 12.☐**	**140400.06. 12.☐**	65
07.	**141400.07. 12.☐**	**140400.07. 12.☐**	75
08.	**141400.08. 12.☐**	**140400.08. 12.☐**	87
10.	**141400.10. 12.☐**	**140400.10. 12.☐**	100
11.	**141400.11. 12.☐**	**140400.11. 12.☐**	112
12.	**141400.12. 12.☐**	**140400.12. 12.☐**	125
13.	**141400.13. 12.☐**	**140400.13. 12.☐**	137
15.	**141400.15. 12.☐**	**140400.15. 12.☐**	150
16.	**141400.16. 12.☐**	**140400.16. 12.☐**	162
169.	**141400.169.12.☐**	**140400.169.12.☐**	169
17.	**141400.17. 12.☐**	**140400.17. 12.☐**	175
182.	**141400.182.12.☐**	**140400.182.12.☐**	182
18.	**141400.18. 12.☐**	**140400.18. 12.☐**	187
20.	**141400.20. 12.☐**	**140400.20. 12.☐**	200
207.	**141400.207.12.☐**	**140400.207.12.☐**	207
21.	**141400.21. 12.☐**	**140400.21. 12.☐**	212
22.	**141400.22. 12.☐**	**140400.22. 12.☐**	225
23.	**141400.23. 12.☐**	**140400.23. 12.☐**	237
25.	**141400.25. 12.☐**	**140400.25. 12.☐**	250
26.	**141400.26. 12.☐**	**140400.26. 12.☐**	262
27.	**141400.27. 12.☐**	**140400.27. 12.☐**	275

Width index	KMA full set		
	Part No. pivoting	Part No. locking	*Bi* [mm]
28.	**141400.28. 12.☐**	**140400.28. 12.☐**	287
30.	**141400.30. 12.☐**	**140400.30. 12.☐**	300
31.	**141400.31. 12.☐**	**140400.31. 12.☐**	312
32.	**141400.32. 12.☐**	**140400.32. 12.☐**	325
33.	**141400.33. 12.☐**	**140400.33. 12.☐**	337
35.	**141400.35. 12.☐**	**140400.35. 12.☐**	350
36.	**141400.36. 12.☐**	**140400.36. 12.☐**	362
37.	**141400.37. 12.☐**	**140400.37. 12.☐**	375
38.	**141400.38. 12.☐**	**140400.38. 12.☐**	387
40.	**141400.40. 12.☐**	**140400.40. 12.☐**	400
41.	**141400.41. 12.☐**	**140400.41. 12.☐**	412
42.	**141400.42. 12.☐**	**140400.42. 12.☐**	425
43.	**141400.43. 12.☐**	**140400.43. 12.☐**	437
45.	**141400.45. 12.☐**	**140400.45. 12.☐**	450
46.	**141400.46. 12.☐**	**140400.46. 12.☐**	462
47.	**141400.47. 12.☐**	**140400.47. 12.☐**	475
48.	**141400.48. 12.☐**	**140400.48. 12.☐**	487
50.	**141400.50. 12.☐**	**140400.50. 12.☐**	500
51.	**141400.51. 12.☐**	**140400.51. 12.☐**	512
52.	**141400.52. 12.☐**	**140400.52. 12.☐**	525
53.	**141400.53. 12.☐**	**140400.53. 12.☐**	537
55.	**141400.55. 12.☐**	**140400.55. 12.☐**	550
60.	**141400.60. 12.☐**	**140400.60. 12.☐**	600

(KMA = polymer metal mounting bracket)

Available from stock
Upon request

KMA mounting brackets | Attachment from any side | Pivoting | Locking

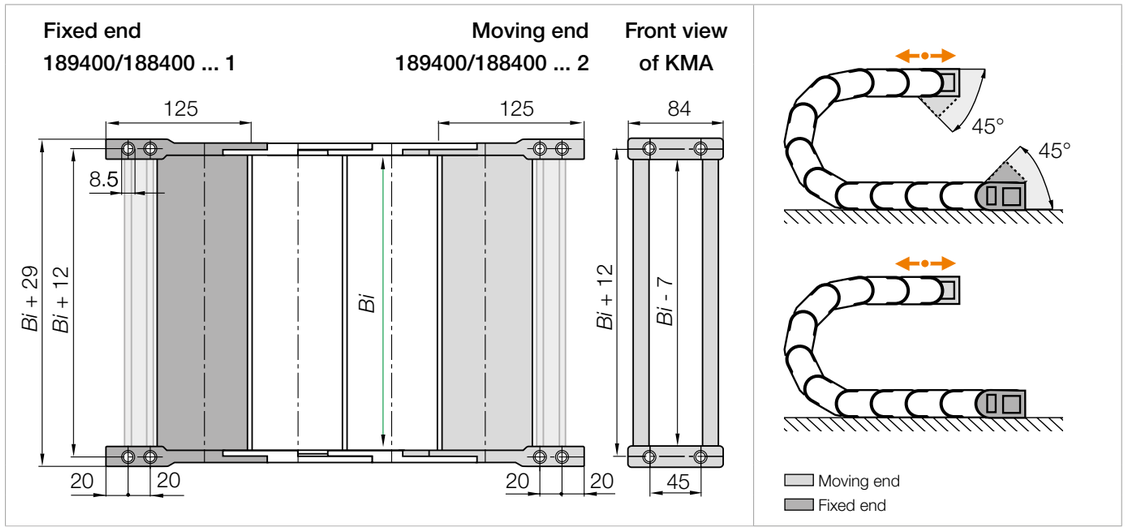

Width index	KMA full set		
	Part No. pivoting	Part No. locking	*Bi* [mm]
07.	**189400.07.12.☐**	**188400.07.12.☐**	75
10.	**189400.10.12.☐**	**188400.10.12.☐**	100
12.	**189400.12.12.☐**	**188400.12.12.☐**	125
15.	**189400.15.12.☐**	**188400.15.12.☐**	150
17.	**189400.17.12.☐**	**188400.17.12.☐**	175
20.	**189400.20.12.☐**	**188400.20.12.☐**	200

Width index	KMA full set		
	Part No. pivoting	Part No. locking	*Bi* [mm]
25.	**189400.25.12.☐**	**188400.25.12.☐**	250
27.	**189400.27.12.☐**	**188400.27.12.☐**	275
30.	**189400.30.12.☐**	**188400.30.12.☐**	300
35.	**189400.35.12.☐**	**188400.35.12.☐**	350
40.	**189400.40.12.☐**	**188400.40.12.☐**	400
46.	**189400.46.12.☐**	**188400.46.12.☐**	462

(KMA = polymer metal mounting bracket)

Order key

141400.30.12.C.A2

Series	Width index	Full set	C-profile option	Pre-fitted

Note: Possible orientations for KMA mounting brackets. For mounting brackets pre-fitted **without strain relief**, please add index **.A**. For types pre-fitted **with strain relief** please add index **.A1**, **.A2**, **.A3** or **.A4**.



For the C-profile option please add index **.C**.

Available from stock
Upon request

Interior separation | Increase cable service life

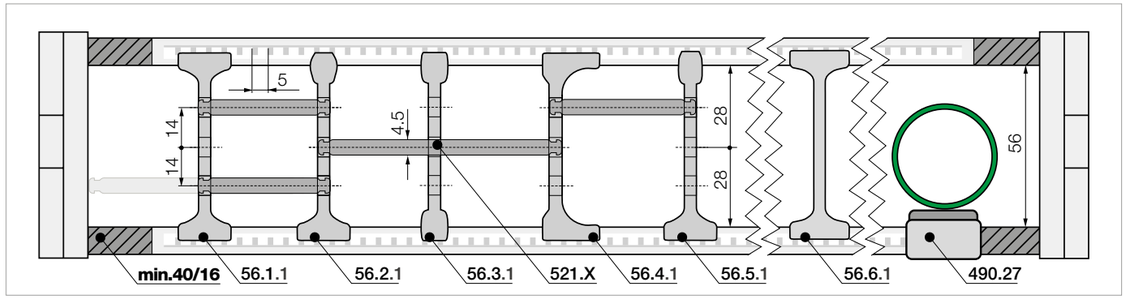

Note: Please be aware of the minimum lateral gap to the side links! **e-tube: 40mm**| **e-chain®: 16mm**
As standard separators are fitted every 2nd e-chain® link!



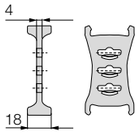

Part No.	
Standard separator	
unassembled	**56.1**
assembled	**56.1.1**

For all applications
Standard separator with a wide base for maximum holding force.



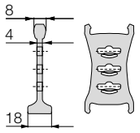

Part No.	
Separator, narrow top	
unassembled	**56.2**
assembled	**56.2.1**

For even faster installation
Wide on one side for high holding force, narrow on opposite side for easy cable fitting.



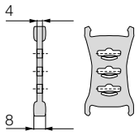

Part No.	
Separator, narrow	
unassembled	**56.3**
assembled	**56.3.1**

For a large number of thin cables
Separator with a narrow base for a large number of thin cables side by side. Saves space.



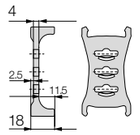

Part No.	
Separator, asymmetrical	
unassembled	**56.4**
assembled	**56.4.1**

For side-mounted applications
Asymmetrical separator, for defined gap distance. No additional spacers required.



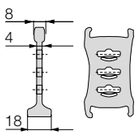

Part No.	
Notch separator	
unassembled	**56.5**
assembled	**56.5.1**

Locks securely in preset increments
Notch separator for exact positioning. Recommended for side-mounted applications.



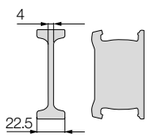

Part No.	
Notch locking separator*	
unassembled	**56.6**
assembled	**56.6.1**

Notch locking separator for increased holding force
For higher crossbar opening forces for high humidity and/ or large hydraulic hoses. They can be positioned precisely and then locked in position.

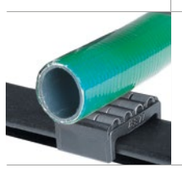

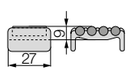

Part No.	
Rollclip*	
unassembled	**489.27**
assembled	**490.27**

Minimises abrasion of sensitive hoses
The rollclip simply clamps onto the opening crossbar. The movable rollers compensate for relative movement between the e-chain® and hose.

*Only suitable for e-chains®

Interior separation | To allow faster filling

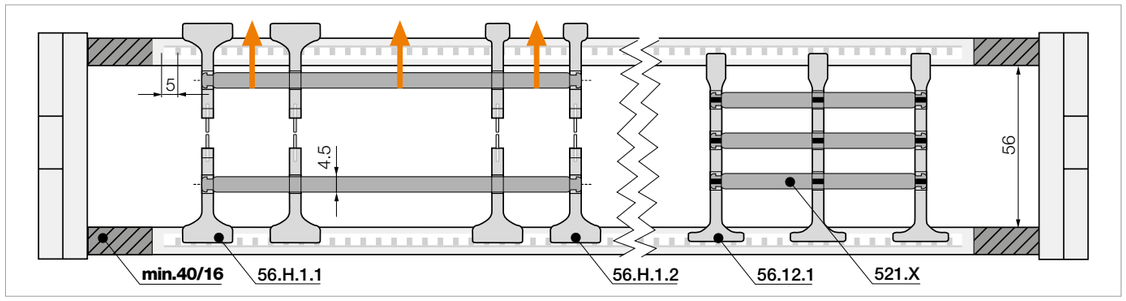

Note: Please be aware of the minimum lateral gap to the side links! **e-tube: 40mm**| **e-chain®: 16mm**
As standard separators are fitted every 2nd e-chain® link!



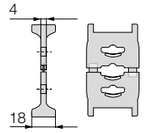

Part No.	
Split separator, wide top	
unassembled	**56.H.1**
assembled	**56.H.1.1**



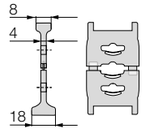

Part No.	
Split separator, narrow top	
unassembled	**56.H.2**
assembled	**56.H.2.1**

Split separators
In order to fill e-chains® more easily and effectively, these separators can be split in the middle. This allows easier access to middle shelf partitions. Fast assembly and easy retrofit. 2 types available: with wide or narrow top.



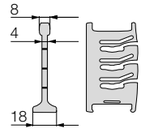

Part No.	
Lean separator	
unassembled	**56.12**
assembled	**56.12.1**

Lean separators[1)]
Quick fitting of shelves in several layers. Enables extremely fast replacement of individual cables in very full e-chains®. Only suitable for e-chains®.

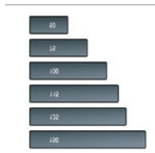

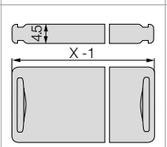

Part No.	
Shelf	
unassembled	**520.X**
assembled	**521.X**

Horizontal separation
Full-width shelf locks securely into separators at both ends, giving a fixed width. Can be used as full-width or modular shelving.

Width [mm]	Part No. unassembled	Part No. assembled
050	**520.050**	**521.050**
065	**520.065**	**521.065**
075	**520.075**	**521.075**
100	**520.100**	**521.100**
125	**520.125**	**521.125**
150	**520.150**	**521.150**
175	**520.175**	**521.175**
200	**520.200**	**521.200**
225	**520.225**	**521.225**
250	**520.250**	**521.250**
300	**520.300**	**521.300**
350	**520.350**	**521.350**
375	**520.375**	**521.375**
387	**520.387**	**521.387**
450	**520.450**	**521.450**



Lean separator for even faster filling: quickly insert several layers of cables into the e-chain® and reduce the installation time by up to 50%. Measured on a 4m long e-chain® fitted with 12 cables. **1) Note: Please combine a maximum of four lean separators with one shelf. Not suitable for side-mounted e-chains®!**

Available from stock
Upon request

Product range



Part No. e-chains® with crossbars every link	Part No. e-chains® with crossbars every 2nd link	*Bi* [mm]	*Ba* [mm]	14240 [kg/m]	14340 [kg/m]
14240. 05.□.0	14340. 05.□.0	50	76	≈ 2.37	≈ 2.32
14240. 06.□.0	14340. 06.□.0	68	94	≈ 2.40	≈ 2.33
14240. 07.□.0	14340. 07.□.0	75	101	≈ 2.42	≈ 2.34
14240.087.□.0	14340.087.□.0	87	114	≈ 2.47	≈ 2.36
14240.097.□.0	14340.097.□.0	97	123	≈ 2.51	≈ 2.38
14240. 10.□.0	14340. 10.□.0	100	126	≈ 2.52	≈ 2.39
14240. 11.□.0	14340. 11.□.0	108	134	≈ 2.55	≈ 2.40
14240.112.□.0	14340.112.□.0	112	139	≈ 2.55	≈ 2.41
14240. 12.□.0	14340. 12.□.0	125	151	≈ 2.62	≈ 2.44
14240.137.□.0	14340.137.□.0	137	164	≈ 2.66	≈ 2.46
14240. 15.□.0	14340. 15.□.0	150	176	≈ 2.72	≈ 2.49
14240.162.□.0	14340.162.□.0	162	189	≈ 2.73	≈ 2.49
14240. 17.□.0	14340. 17.□.0	168	194	≈ 2.79	≈ 2.52
14240. 18.□.0	14340. 18.□.0	175	201	≈ 2.82	≈ 2.53
14240.187.□.0	14340.187.□.0	187	214	≈ 2.84	≈ 2.55
14240. 20.□.0	14340. 20.□.0	200	226	≈ 2.89	≈ 2.58

Part No. e-chains® with crossbars every link	Part No. e-chains® with crossbars every 2nd link	*Bi* [mm]	*Ba* [mm]	14240 [kg/m]	14340 [kg/m]
14240.212.□.0	14340.212.□.0	212	239	≈ 2.95	≈ 2.60
14240. 23.□.0	14340. 23.□.0	225	251	≈ 3.01	≈ 2.63
14240.237.□.0	14340.237.□.0	237	264	≈ 3.04	≈ 2.65
14240. 25.□.0	14340. 25.□.0	250	276	≈ 3.10	≈ 2.68
14240.262.□.0	14340.262.□.0	262	289	≈ 3.11	≈ 2.69
14240. 28.□.0	14340. 28.□.0	275	301	≈ 3.19	≈ 2.72
14240. 29.□.0	14340. 29.□.0	287	314	≈ 3.20	≈ 2.73
14240. 30.□.0	14340. 30.□.0	300	326	≈ 3.30	≈ 2.78
14240.312.□.0	14340.312.□.0	312	339	≈ 3.31	≈ 2.79
14240.325.□.0	14340.325.□.0	325	351	≈ 3.37	≈ 2.81
14240.337.□.0	14340.337.□.0	337	364	≈ 3.40	≈ 2.83
14240.350.□.0	14340.350.□.0	350	376	≈ 3.56	≈ 2.91
14240.362.□.0	14340.362.□.0	362	389	≈ 3.61	≈ 2.93
14240.375.□.0	14340.375.□.0	375	401	≈ 3.64	≈ 2.95
14240.387.□.0	14340.387.□.0	387	414	≈ 3.69	≈ 2.97
14240.400.□.0	14340.400.□.0	400	426	≈ 3.73	≈ 2.99

Available bend radii *R* [mm] | 135 | 150 | 175 | 200 | 250 | 300 | 400 | 500 |

Order key

14240 . 20 . 300 . 0

Series | Width index | Bend radius | Colour index

Order example:
Complete Part No. with the required radius □. Example:
14240.20.300.0 = crossbars removable along the inner and outer radius
14340.20.300.0 = crossbars removable along the inner and outer radius
Order index for colour options ▶ **www.igus.eu/info-colours**

Available from stock
Upon request

Unsupported applications | Short travels

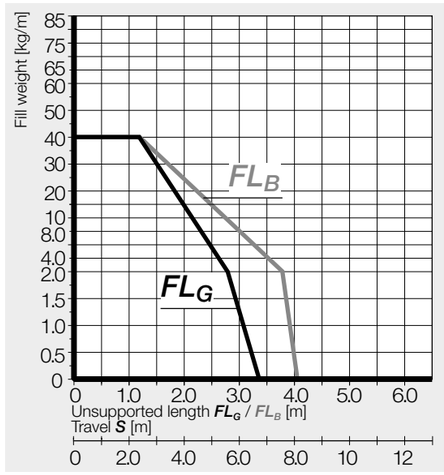

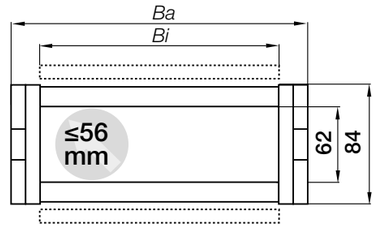

Inner height [mm]	62
Pitch [mm]	91
Links/m [pc.]	11
corresponds to [mm]	1,001
e-chain® length	$L_K = S/2 + K$

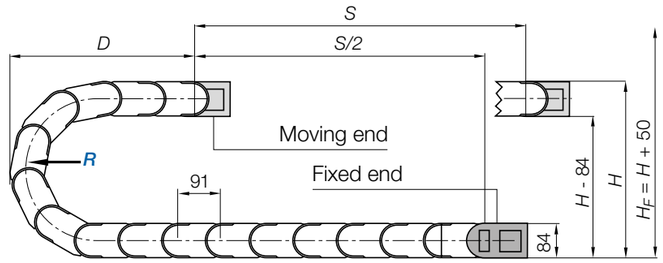

R	135	150	175	200	250	300	400	500
H $^{0}_{+25}$	354	384	434	484	584	684	884	1,084
D	314	329	354	379	429	479	579	679
K	610	655	735	815	970	1,125	1,440	1.755

The required clearance height: $H_F = H + 50$mm (with 2.0kg/m fill weight)

Gliding applications | For travel lengths from 12m to max. 250m

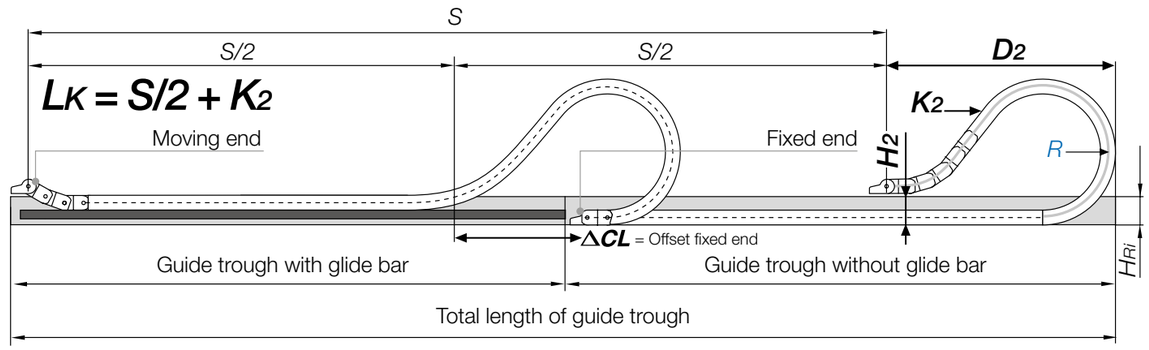

R	135	150	175	200	250	300	400	500
H_2	266	266	266	266	266	266	266	266
D_2 $^{+50}$	390	450	550	710	920	1,120	1,530	1,850
K_2	728	819	1,001	1,274	1,638	1,911	2,548	3,185
ΔCL	124	159	209	359	509	659	959	1,159

Note: In case of travels between 9 and 12m we recommend an e-chain® with a longer unsupported length.

Available from stock
Upon request

KMA mounting brackets | Attachment from any side | Pivoting | Locking

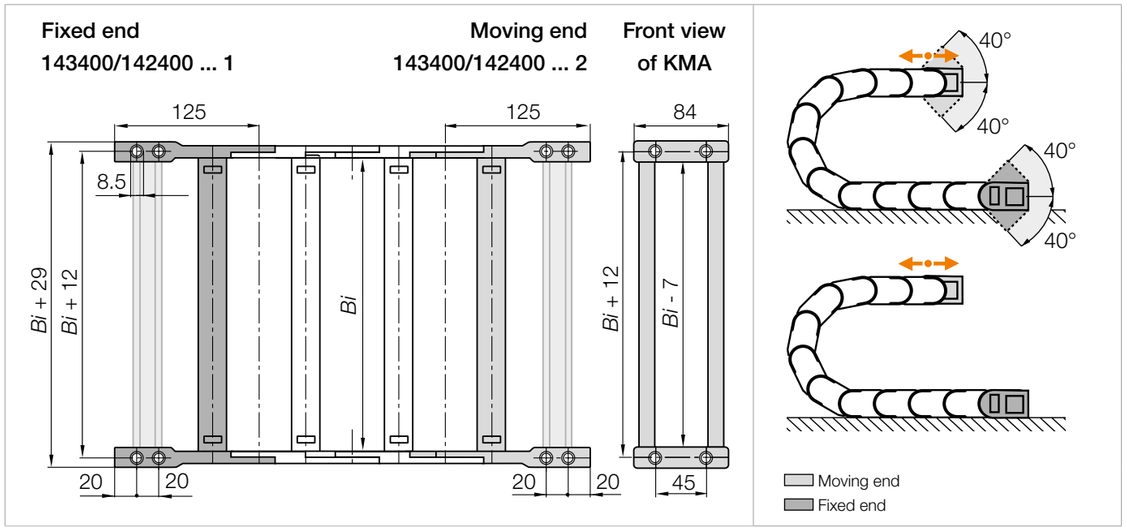

Width index	KMA full set Part No. pivoting	Part No. locking	*Bi* [mm]
05.	**143400.05. 12.☐**	**142400.05. 12.☐**	50
06.	**143400.06. 12.☐**	**142400.06. 12.☐**	68
07.	**143400.07. 12.☐**	**142400.07. 12.☐**	75
087.	**143400.087.12.☐**	**142400.087.12.☐**	87
097.	**143400.097.12.☐**	**142400.097.12.☐**	97
10.	**143400.10. 12.☐**	**142400.10. 12.☐**	100
11.	**143400.11. 12.☐**	**142400.11. 12.☐**	108
112.	**143400.112.12.☐**	**142400.112.12.☐**	112
12.	**143400.12. 12.☐**	**142400.12. 12.☐**	125
137.	**143400.137.12.☐**	**142400.137.12.☐**	137
15.	**143400.15. 12.☐**	**142400.15. 12.☐**	150
162.	**143400.162.12.☐**	**142400.162.12.☐**	162
17.	**143400.17. 12.☐**	**142400.17. 12.☐**	168
18.	**143400.18. 12.☐**	**142400.18. 12.☐**	175
187.	**143400.187.12.☐**	**142400.187.12.☐**	187
20.	**143400.20. 12.☐**	**142400.20. 12.☐**	200

Width index	KMA full set Part No. pivoting	Part No. locking	*Bi* [mm]
212.	**143400.212.12.☐**	**142400.212.12.☐**	212
23.	**143400.23. 12.☐**	**142400.23. 12.☐**	225
237.	**143400.237.12.☐**	**142400.237.12.☐**	237
25.	**143400.25. 12.☐**	**142400.25. 12.☐**	250
262.	**143400.262.12.☐**	**142400.262.12.☐**	262
28.	**143400.28. 12.☐**	**142400.28. 12.☐**	275
29.	**143400.29. 12.☐**	**142400.29. 12.☐**	287
30.	**143400.30. 12.☐**	**142400.30. 12.☐**	300
312.	**143400.312.12.☐**	**142400.312.12.☐**	312
325.	**143400.325.12.☐**	**142400.325.12.☐**	325
337.	**143400.337.12.☐**	**142400.337.12.☐**	337
350.	**143400.350.12.☐**	**142400.350.12.☐**	350
362.	**143400.362.12.☐**	**142400.362.12.☐**	362
375.	**143400.375.12.☐**	**142400.375.12.☐**	375
387.	**143400.387.12.☐**	**142400.387.12.☐**	387
400.	**143400.400.12.☐**	**142400.400.12.☐**	400

(KMA = polymer metal mounting bracket)

Order key

143400.20.12.C.A2

Series	Width index	Full set	C-profile option	Pre-fitted

Note: Possible orientations for KMA mounting brackets. For mounting brackets pre-fitted **without strain relief**, please add index **.A**. For types pre-fitted **with strain relief** please add index **.A1**, **.A2**, **.A3** or **.A4**.



For the C-profile option please add index **.C**.

Interior separation | Increase cable service life

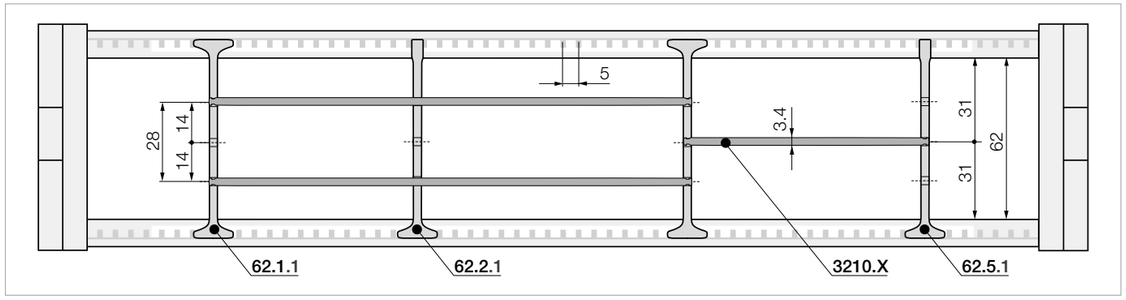

No lateral gap to side links necessary.
As standard separators are fitted every 2nd e-chain® link!

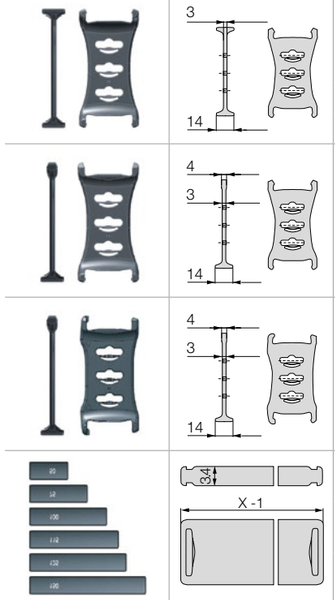

Part No. Standard separator	
unassembled	**62.1**
assembled	**62.1.1**

For all applications

Standard separator with a wide base for maximum holding force.

Part No. Separator, narrow top	
unassembled	**62.2**
assembled	**62.2.1**

For even faster installation

Wide on one side for high holding force, narrow on opposite side for easy cable fitting.

Part No. Notch separator*	
unassembled	**62.5**
assembled	**62.5.1**

Locks securely in preset increments

Notch separator* for exact positioning. Recommended for side-mounted applications. *Suitable from ***Bi*** 75

Part No. Shelf	
unassembled	**3200.X**
assembled	**3210.X**

Horizontal separation

Full-width shelf locks securely into separators at both ends, giving a fixed width. Can be used as full-width or modular shelving.

Width [mm]	Part No. unassembled	Part No. assembled
050	**3200.050**	**3210.050**
075	**3200.075**	**3210.075**
100	**3200.100**	**3210.100**
115	**3200.115**	**3210.115**
125	**3200.125**	**3210.125**
150	**3200.150**	**3210.150**
175	**3200.175**	**3210.175**
200	**3200.200**	**3210.200**
225	**3200.225**	**3210.225**
250	**3200.250**	**3210.250**

Interior separation | To allow faster filling

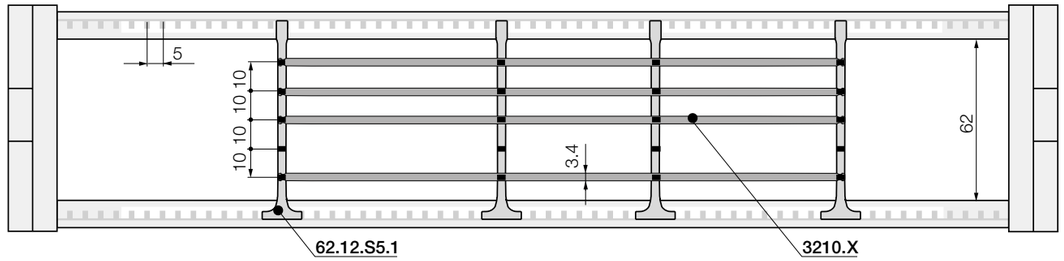

No lateral gap to side links necessary.
As standard separators are fitted every 2nd e-chain® link!



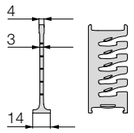

Part No.	
Lean separator[1)]	
unassembled	**62.12.S5**
assembled	**62.12.S5.1**

Lean separators[1)]

Quick fitting of shelves in several layers. Enables extremely fast replacement of individual cables in very full e-chains®. Only suitable for e-chains®.

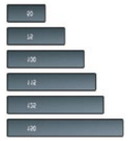

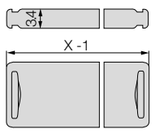

Part No.	
Shelf	
unassembled	**3200.X**
assembled	**3210.X**

Horizontal separation

Full-width shelf locks securely into separators at both ends, giving a fixed width. Can be used as full-width or modular shelving.

Width [mm]	Part No. unassembled	Part No. assembled
050	**3200.050**	**3210.050**
075	**3200.075**	**3210.075**
100	**3200.100**	**3210.100**

Width [mm]	Part No. unassembled	Part No. assembled
115	**3200.115**	**3210.115**
125	**3200.125**	**3210.125**
150	**3200.150**	**3210.150**

Width [mm]	Part No. unassembled	Part No. assembled
175	**3200.175**	**3210.175**
200	**3200.200**	**3210.200**
225	**3200.225**	**3210.225**

Width [mm]	Part No. unassembled	Part No. assembled
250	**3200.250**	**3210.250**



Lean separator for even faster filling: quickly insert several layers of cables into the e-chain® and reduce the installation time by up to 50%. Measured on a 4m long e-chain® fitted with 12 cables. **1) Note: Please combine a maximum of four lean separators with one shelf. Not suitable for side-mounted e-chains®!**

Available from stock
Upon request

E4/light | Series 14550 / 14650 / R19050

Product range



e-chains® with crossbars every link	e-chains® with crossbars every 2nd link	e-tubes closed		Bi [mm]	Ba [mm]	14550 [kg/m]	14650 [kg/m]	R19050 [kg/m]
14550.	14650.	–	05.□.0	50	77	≈ 3.28	≈ 3.27	–
14550.	14650.	–	055.□.0	55	82	≈ 3.33	≈ 3.29	–
14550.	14650.	–	06.□.0	65	92	≈ 3.37	≈ 3.31	–
14550.	14650.	19050.	07.□.0	75	102	≈ 3.44	≈ 3.35	≈ 4.00
14550.	14650.	–	08.□.0	87	114	≈ 3.52	≈ 3.38	–
14550.	14650.	19050.	10.□.0	100	127	≈ 3.61	≈ 3.43	≈ 4.33
14550.	14650.	–	11.□.0	112	139	≈ 3.73	≈ 3.49	–
14550.	14650.	19050.	12.□.0	125	152	≈ 3.81	≈ 3.53	≈ 4.70
14550.	14650.	–	13.□.0	137	164	≈ 3.94	≈ 3.60	–
14550.	14650.	19050.	15.□.0	150	177	≈ 3.98	≈ 3.62	≈ 5.04
14550.	14650.	–	16.□.0	162	189	≈ 4.09	≈ 3.67	–
14550.	14650.	–	169.□.0	169	197	≈ 4.18	≈ 3.71	–
14550.	14650.	19050.	17.□.0	175	202	≈ 4.23	≈ 3.74	≈ 5.41
14550.	14650.	–	182.□.0	182	210	≈ 4.27	≈ 3.76	–
14550.	14650.	–	18.□.0	187	214	≈ 4.34	≈ 3.80	–
14550.	14650.	19050.	20.□.0	200	227	≈ 4.39	≈ 3.82	≈ 5.64
14550.	14650.	–	207.□.0	207	235	≈ 4.44	≈ 3.84	–
14550.	14650.	–	21.□.0	212	239	≈ 4.46	≈ 3.86	–
14550.	14650.	–	22.□.0	225	252	≈ 4.53	≈ 3.89	–
14550.	14650.	–	23.□.0	237	264	≈ 4.64	≈ 3.95	–
14550.	14650.	19050.	25.□.0	250	277	≈ 4.76	≈ 4.00	≈ 6.32
14550.	14650.	–	26.□.0	262	289	≈ 4.85	≈ 4.05	–
14550.	14650.	19050.	27.□.0	275	302	≈ 4.95	≈ 4.10	≈ 6.65
14550.	14650.	–	28.□.0	287	314	≈ 5.01	≈ 4.13	–
14550.	14650.	19050.	30.□.0	300	327	≈ 5.16	≈ 4.21	≈ 6.99
14550.	14650.	–	31.□.0	312	339	≈ 5.20	≈ 4.23	–
14550.	14650.	–	32.□.0	325	352	≈ 5.30	≈ 4.28	–
14550.	14650.	–	33.□.0	337	364	≈ 5.42	≈ 4.34	–
14550.	14650.	19050.	35.□.0	350	377	≈ 5.62	≈ 4.44	≈ 7.68
14550.	14650.	–	36.□.0	362	389	≈ 5.53	≈ 4.39	–
14550.	14650.	–	37.□.0	375	402	≈ 5.63	≈ 4.44	–
14550.	14650.	–	38.□.0	387	414	≈ 5.74	≈ 4.50	–
14550.	14650.	19050.	40.□.0	400	427	≈ 6.01	≈ 4.63	≈ 8.36
14550.	14650.	–	41.□.0	412	439	≈ 5.94	≈ 4.60	–
14550.	14650.	–	42.□.0	425	452	≈ 6.23	≈ 4.74	–
14550.	14650.	–	43.□.0	437	464	≈ 6.07	≈ 4.66	–
14550.	14650.	–	45.□.0	450	477	≈ 6.40	≈ 4.83	–
14550.	14650.	19050.	46.□.0	462	489	≈ 6.35	≈ 4.80	≈ 9.21
14550.	14650.	–	47.□.0	475	502	≈ 6.39	≈ 4.82	–
14550.	14650.	–	48.□.0	487	514	≈ 6.64	≈ 4.95	–
14550.	14650.	–	50.□.0	500	527	≈ 6.74	≈ 5.00	–
14550.	14650.	–	51.□.0	512	539	≈ 6.65	≈ 4.95	–
14550.	14650.	–	52.□.0	525	552	≈ 6.82	≈ 5.04	–
14550.	14650.	–	53.□.0	537	564	≈ 6.92	≈ 5.09	–
14550.	14650.	–	55.□.0	550	577	≈ 7.34	≈ 5.30	–
14550.	14650.	–	60.□.0	600	627	≈ 7.57	≈ 5.41	–

Available bend radii *R* [mm] | 150* | 175* | 200 | 250 | 300 | 350 | 400 | 450 | 500 | 600 |

* Radius not available for e-tubes.

Order key

14650.30.300.0

Series	Width index	Bend radius	Colour index

Order example:
Complete Part No. with the required radius □. Example:
14550.30.300.0 = crossbars removable along the inner and outer radius
14650.30.300.0 = crossbars removable along the inner and outer radius
19050.30.300.0 = lids openable along the outer radius from one side
Order index for colour options ▶ **www.igus.eu/info-colours**

14550
14650
R19050

E4/light | Series 14550 / 14650 / R19050

Unsupported applications | Short travels

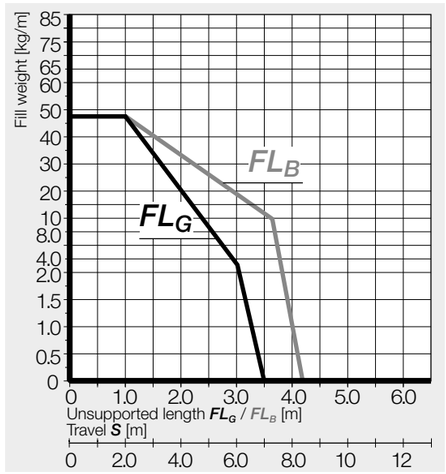

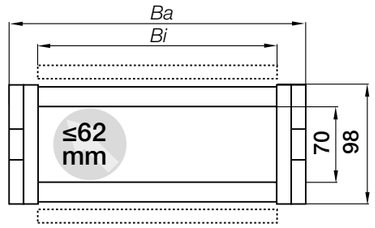

Inner height [mm]	70
Pitch [mm]	91
Links/m [pc.]	11
corresponds to [mm]	1,001
e-chain® length	$L_K = S/2 + K$

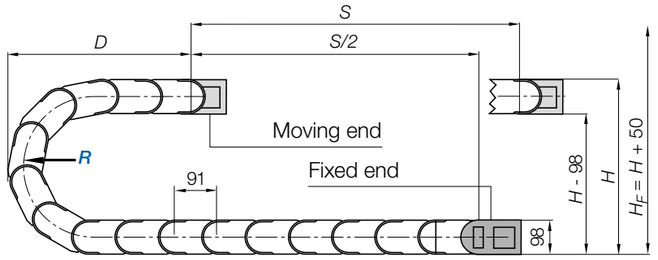

R	150*	175*	200	250	300	350	400	450	500	600
H	398	448	498	598	698	798	898	998	1,098	1,298
D	336	361	386	436	486	536	586	636	686	786
K	655	735	815	970	1,125	1,285	1,440	1,600	1.755	2,070

The required clearance height: $H_F = H + 50$mm (with 2.5kg/m fill weight)

* Radius not available for e-tubes.

Note: If a gliding application is required for a long travel, please consult igus®.

Available from stock
Upon request

KMA mounting brackets | Attachment from any side | Pivoting | Locking

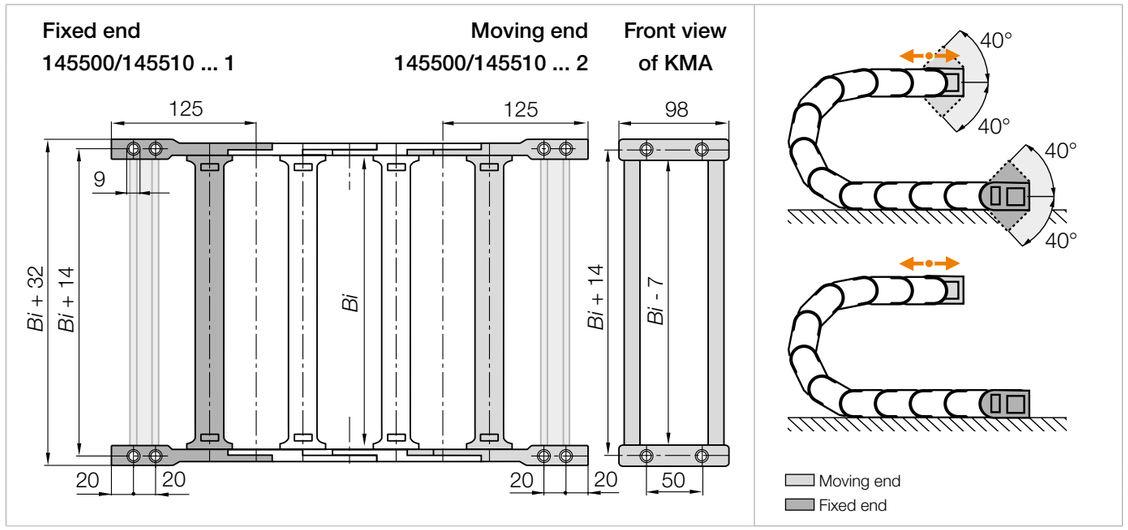

Width index	KMA full set		
	Part No. pivoting	Part No. locking	*Bi* [mm]
05.	**145500.05. 12.☐**	**145510.05. 12.☐**	50
055.	**145500.055.12.☐**	**145510.055.12.☐**	55
06.	**145500.06. 12.☐**	**145510.06. 12.☐**	65
07.	**145500.07. 12.☐**	**145510.07. 12.☐**	75
08.	**145500.08. 12.☐**	**145510.08. 12.☐**	87
10.	**145500.10. 12.☐**	**145510.10. 12.☐**	100
11.	**145500.11. 12.☐**	**145510.11. 12.☐**	112
12.	**145500.12. 12.☐**	**145510.12. 12.☐**	125
13.	**145500.13. 12.☐**	**145510.13. 12.☐**	137
15.	**145500.15. 12.☐**	**145510.15. 12.☐**	150
16.	**145500.16. 12.☐**	**145510.16. 12.☐**	162
169.	**145500.169.12.☐**	**145510.169.12.☐**	169
17.	**145500.17. 12.☐**	**145510.17. 12.☐**	175
182.	**145500.182.12.☐**	**145510.182.12.☐**	182
18.	**145500.18. 12.☐**	**145510.18. 12.☐**	187
20.	**145500.20. 12.☐**	**145510.20. 12.☐**	200
207.	**145500.207.12.☐**	**145510.207.12.☐**	207
21.	**145500.21. 12.☐**	**145510.21. 12.☐**	212
22.	**145500.22. 12.☐**	**145510.22. 12.☐**	225
23.	**145500.23. 12.☐**	**145510.23. 12.☐**	237
25.	**145500.25. 12.☐**	**145510.25. 12.☐**	250
26.	**145500.26. 12.☐**	**145510.26. 12.☐**	262
27.	**145500.27. 12.☐**	**145510.27. 12.☐**	275

Width index	KMA full set		
	Part No. pivoting	Part No. locking	*Bi* [mm]
28.	**145500.28. 12.☐**	**145510.28. 12.☐**	287
30.	**145500.30. 12.☐**	**145510.30. 12.☐**	300
31.	**145500.31. 12.☐**	**145510.31. 12.☐**	312
32.	**145500.32. 12.☐**	**145510.32. 12.☐**	325
33.	**145500.33. 12.☐**	**145510.33. 12.☐**	337
35.	**145500.35. 12.☐**	**145510.35. 12.☐**	350
36.	**145500.36. 12.☐**	**145510.36. 12.☐**	362
37.	**145500.37. 12.☐**	**145510.37. 12.☐**	375
38.	**145500.38. 12.☐**	**145510.38. 12.☐**	387
40.	**145500.40. 12.☐**	**145510.40. 12.☐**	400
41.	**145500.41. 12.☐**	**145510.41. 12.☐**	412
42.	**145500.42. 12.☐**	**145510.42. 12.☐**	425
43.	**145500.43. 12.☐**	**145510.43. 12.☐**	437
45.	**145500.45. 12.☐**	**145510.45. 12.☐**	450
46.	**145500.46. 12.☐**	**145510.46. 12.☐**	462
47.	**145500.47. 12.☐**	**145510.47. 12.☐**	475
48.	**145500.48. 12.☐**	**145510.48. 12.☐**	487
50.	**145500.50. 12.☐**	**145510.50. 12.☐**	500
51.	**145500.51. 12.☐**	**145510.51. 12.☐**	512
52.	**145500.52. 12.☐**	**145510.52. 12.☐**	525
53.	**145500.53. 12.☐**	**145510.53. 12.☐**	537
55.	**145500.55. 12.☐**	**145510.55. 12.☐**	550
60.	**145500.60. 12.☐**	**145510.60. 12.☐**	600

(KMA = polymer metal mounting bracket)

Available from stock
Upon request

KMA mounting brackets | Attachment from any side | Pivoting | Locking

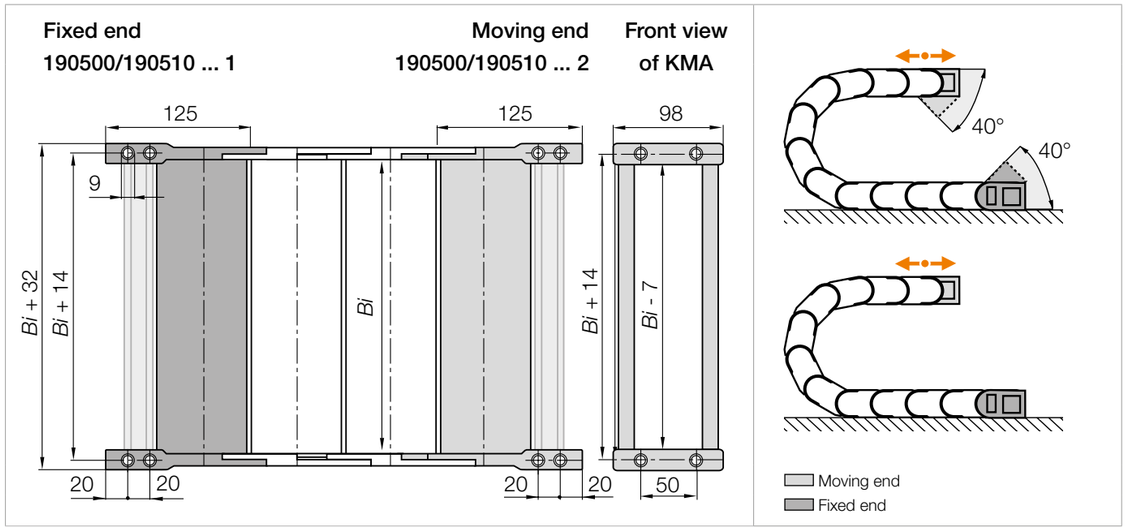

Width index	KMA full set		
	Part No. pivoting	Part No. locking	*Bi* [mm]
07.	**190500.07.12.☐**	**190510.07.12.☐**	75
10.	**190500.10.12.☐**	**190510.10.12.☐**	100
12.	**190500.12.12.☐**	**190510.12.12.☐**	125
15.	**190500.15.12.☐**	**190510.15.12.☐**	150
17.	**190500.17.12.☐**	**190510.17.12.☐**	175
20.	**190500.20.12.☐**	**190510.20.12.☐**	200

Width index	KMA full set		
	Part No. pivoting	Part No. locking	*Bi* [mm]
25.	**190500.25.12.☐**	**190510.25.12.☐**	250
27.	**190500.27.12.☐**	**190510.27.12.☐**	275
30.	**190500.30.12.☐**	**190510.30.12.☐**	300
35.	**190500.35.12.☐**	**190510.35.12.☐**	350
40.	**190500.40.12.☐**	**190510.40.12.☐**	400
46.	**190500.46.12.☐**	**190510.46.12.☐**	462

(KMA = polymer metal mounting bracket)

Order key

145500.30.12.C.A2

Series | Width index | Full set | C-profile option | Pre-fitted

Note: Possible orientations for KMA mounting brackets. For mounting brackets pre-fitted **without strain relief**, please add index **.A**. For types pre-fitted **with strain relief** please add index **.A1**, **.A2**, **.A3** or **.A4**.



For the C-profile option please add index **.C**.

Available from stock
Upon request

Interior separation | Increase cable service life

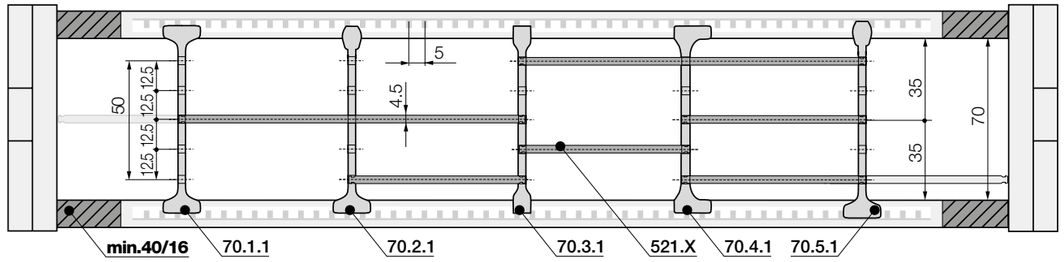

Note: Please be aware of the minimum lateral gap to the side links! **e-tube: 40mm**| **e-chain®: 16mm**
As standard separators are fitted every 2nd e-chain® link!



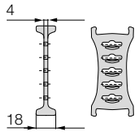

Part No.
Standard separator
unassembled **70.1**
assembled **70.1.1**

For all applications
Standard separator with a wide base for maximum holding force.



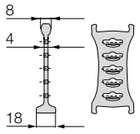

Part No.
Separator, narrow top
unassembled **70.2**
assembled **70.2.1**

For even faster installation
Wide on one side for high holding force, narrow on opposite side for easy cable fitting.



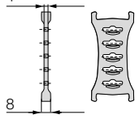

Part No.
Separator, narrow
unassembled **70.3**
assembled **70.3.1**

For a large number of thin cables
Separator with a narrow base for a large number of thin cables side by side. Saves space.



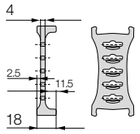

Part No.
Separator, asymmetrical
unassembled **70.4**
assembled **70.4.1**

For side-mounted applications
Asymmetrical separator, for defined gap distance. No additional spacers required.



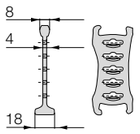

Part No.
Notch separator
unassembled **70.5**
assembled **70.5.1**

Locks securely in preset increments
Notch separator for exact positioning. Recommended for side-mounted applications.

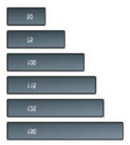

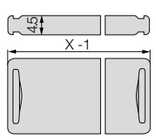

Part No.
Shelf
unassembled **520.X**
assembled **521.X**

Horizontal separation
Full-width shelf locks securely into separators at both ends, giving a fixed width. Can be used as full-width or modular shelving.

Width [mm]	Part No. unassembled	Part No. assembled
050	**520.050**	**521.050**
065	**520.065**	**521.065**
075	**520.075**	**521.075**
100	**520.100**	**521.100**
125	**520.125**	**521.125**
150	**520.150**	**521.150**
175	**520.175**	**521.175**
200	**520.200**	**521.200**
225	**520.225**	**521.225**
250	**520.250**	**521.250**
300	**520.300**	**521.300**
350	**520.350**	**521.350**
375	**520.375**	**521.375**
387	**520.387**	**521.387**
450	**520.450**	**521.450**

Product range



e-chains® with crossbars every link	e-chains® with crossbars every 2nd link	e-tubes closed		Bi [mm]	Ba [mm]	15050 [kg/m]	15150 [kg/m]	R19850 [kg/m]
15050.	15150.	–	05.□.0	50	80	≈ 3.85	≈ 3.84	–
15050.	15150.	–	055.□.0	55	85	≈ 3.90	≈ 3.86	–
15050.	15150.	–	06.□.0	65	95	≈ 3.95	≈ 3.88	–
15050.	15150.	19850.	07.□.0	75	105	≈ 4.00	≈ 3.92	≈ 4.46
15050.	15150.	–	08.□.0	87	117	≈ 4.05	≈ 3.96	–
15050.	15150.	19850.	10.□.0	100	130	≈ 4.18	≈ 4.00	≈ 4.74
15050.	15150.	–	11.□.0	112	143	≈ 4.31	≈ 4.07	–
15050.	15150.	19850.	12.□.0	125	155	≈ 4.38	≈ 4.10	≈ 5.10
15050.	15150.	–	13.□.0	137	168	≈ 4.51	≈ 4.17	–
15050.	15150.	19850.	15.□.0	150	180	≈ 4.58	≈ 4.20	≈ 5.53
15050.	15150.	–	16.□.0	162	193	≈ 4.69	≈ 4.26	–
15050.	15150.	–	169.□.0	169	200	≈ 4.77	≈ 4.30	–
15050.	15150.	19850.	17.□.0	175	205	≈ 4.80	≈ 4.31	≈ 5.88
15050.	15150.	–	182.□.0	182	213	≈ 4.85	≈ 4.33	–
15050.	15150.	–	18.□.0	187	218	≈ 4.91	≈ 4.37	–
15050.	15150.	19850.	20.□.0	200	230	≈ 4.93	≈ 4.38	≈ 6.11
15050.	15150.	–	207.□.0	207	238	≈ 4.99	≈ 4.41	–
15050.	15150.	–	21.□.0	212	243	≈ 5.04	≈ 4.43	–
15050.	15150.	–	22.□.0	225	255	≈ 5.10	≈ 4.47	–
15050.	15150.	–	23.□.0	237	268	≈ 5.24	≈ 4.53	–
15050.	15150.	19850.	25.□.0	250	280	≈ 5.32	≈ 4.58	≈ 6.83
15050.	15150.	–	26.□.0	262	293	≈ 5.41	≈ 4.62	–
15050.	15150.	19850.	27.□.0	275	305	≈ 5.52	≈ 4.68	≈ 7.26

e-chains® with crossbars every link	e-chains® with crossbars every 2nd link	e-tubes closed		Bi [mm]	Ba [mm]	15050 [kg/m]	15150 [kg/m]	R19850 [kg/m]
15050.	15150.	–	28.□.0	287	318	≈ 5.54	≈ 4.69	–
15050.	15150.	19850.	30.□.0	300	330	≈ 5.76	≈ 4.80	≈ 7.49
15050.	15150.	–	31.□.0	312	343	≈ 5.80	≈ 4.82	–
15050.	15150.	–	32.□.0	325	355	≈ 5.85	≈ 4.84	–
15050.	15150.	–	33.□.0	337	368	≈ 6.03	≈ 4.93	–
15050.	15150.	19850.	35.□.0	350	380	≈ 6.18	≈ 5.01	≈ 8.24
15050.	15150.	–	36.□.0	362	393	≈ 6.19	≈ 5.02	–
15050.	15150.	–	37.□.0	375	405	≈ 6.20	≈ 5.02	–
15050.	15150.	–	38.□.0	387	418	≈ 6.29	≈ 5.06	–
15050.	15150.	19850.	40.□.0	400	430	≈ 6.49	≈ 5.16	≈ 9.20
15050.	15150.	–	41.□.0	412	443	≈ 6.64	≈ 5.24	–
15050.	15150.	–	42.□.0	425	455	≈ 6.80	≈ 5.31	–
15050.	15150.	–	43.□.0	437	468	≈ 6.86	≈ 5.35	–
15050.	15150.	–	45.□.0	450	480	≈ 6.93	≈ 5.38	–
15050.	15150.	19850.	46.□.0	462	493	≈ 6.95	≈ 5.39	≈ 9.66
15050.	15150.	–	47.□.0	475	505	≈ 7.08	≈ 5.46	–
15050.	15150.	–	48.□.0	487	518	≈ 7.16	≈ 5.49	–
15050.	15150.	–	50.□.0	500	530	≈ 7.22	≈ 5.52	–
15050.	15150.	–	51.□.0	512	543	≈ 7.24	≈ 5.53	–
15050.	15150.	–	52.□.0	525	555	≈ 7.28	≈ 5.56	–
15050.	15150.	–	53.□.0	537	568	≈ 7.44	≈ 5.63	–
15050.	15150.	–	55.□.0	550	580	≈ 7.92	≈ 5.87	–
15050.	15150.	–	60.□.0	600	630	≈ 8.12	≈ 5.97	–

Available bend radii *R* [mm] | 150* | 200 | 250 | 300 | 350 | 400 | 500 | 600 |

* Radius not available for e-tubes.

Order key

15050.15.200.0

Series | Width index | Bend radius | Colour index

Order example:
Complete Part No. with the required radius □. Example:
15050.15.200.0 = crossbars removable along the inner and outer radius
15150.15.200.0 = crossbars removable along the inner and outer radius
19850.15.200.0 = lids openable along the outer radius from one side
Order index for colour options ▶ **www.igus.eu/info-colours**

E4/light | Series 15050 / 15150 / R19850

15050
15150
R19850

Unsupported applications | Short travels

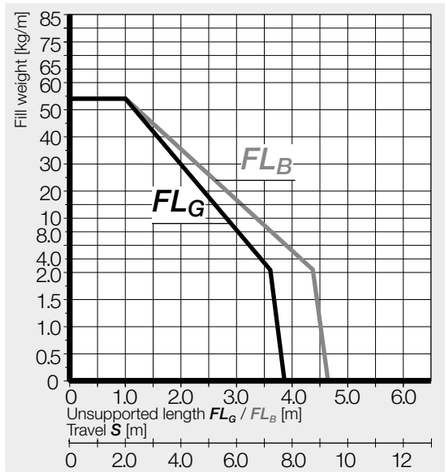

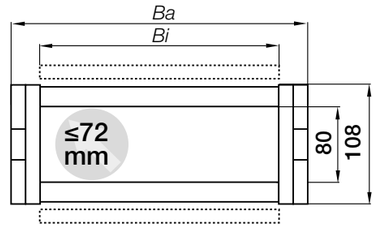

Inner height [mm]	80
Pitch [mm]	91
Links/m [pc.]	11
corresponds to [mm]	1,001
e-chain® length	$L_K = S/2 + K$

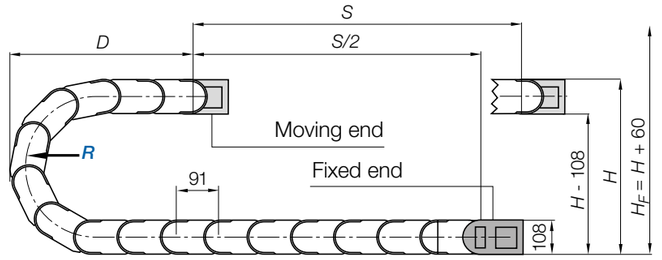

R	150*	200	250	300	350	400	500	600
H $^{0}_{+25}$	408	508	608	708	808	908	1,108	1.308
D	341	391	441	491	541	591	691	791
K	655	815	970	1,125	1,285	1,440	1.755	2,070

The required clearance height: $H_F = H + 60$mm (with 3.0kg/m fill weight)

* Radius not available for e-tubes.

Gliding applications | For travel lengths from 12m to max. 250m

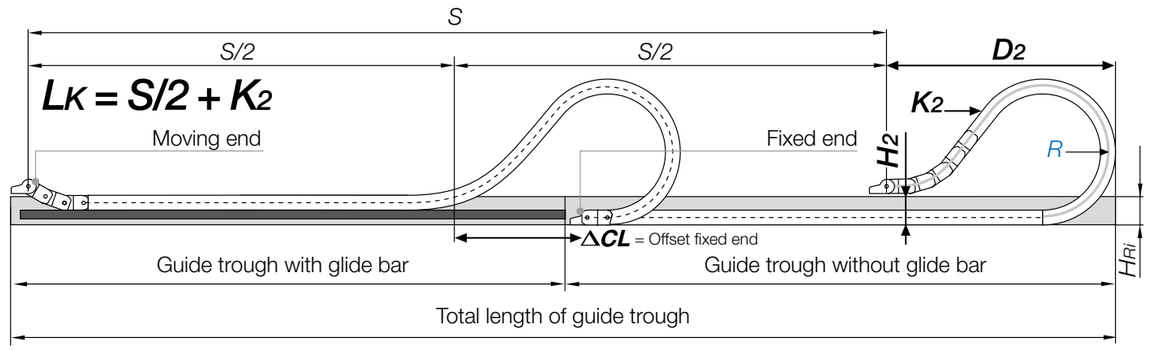

R	150*	200	250	300	350	400	500	600[1]
H_2	242	242	242	242	242	242	242	–
D_2 $^{+50}$	550	800	950	1,200	1,550	1,700	2,175	–
K_2	910	1,274	1,638	2,002	2,457	2,730	3,458	–
ΔCL	209	409	509	709	1,009	1,109	1,484	–

Note: In case of travels between 9 and 12m we recommend an e-chain® with a longer unsupported length.

*Radius not available for e-tubes.

1) Not suitable for long travel applications. Please consult igus®.

Available from stock
Upon request

E4/light **e-chains®** | Series 15050 / 15150

KMA mounting brackets | Attachment from any side | Pivoting | Locking

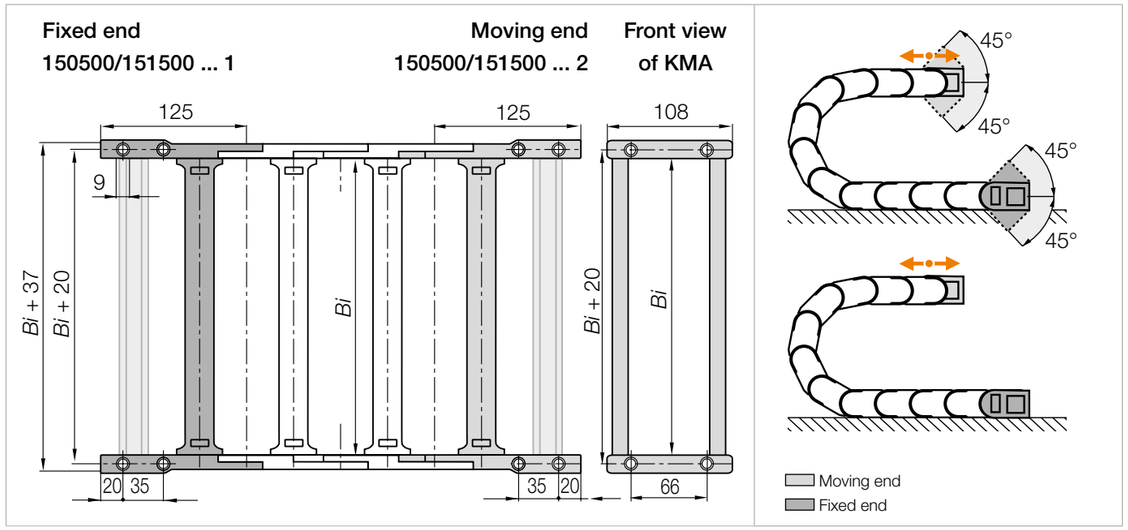

Width index	KMA full set		
	Part No. pivoting	Part No. locking	*Bi* [mm]
05.	**150500.05. 12.☐**	**151500.05. 12.☐**	50
055.	**150500.055.12.☐**	**151500.055.12.☐**	55
06.	**150500.06. 12.☐**	**151500.06. 12.☐**	65
07.	**150500.07. 12.☐**	**151500.07. 12.☐**	75
08.	**150500.08. 12.☐**	**151500.08. 12.☐**	87
10.	**150500.10. 12.☐**	**151500.10. 12.☐**	100
11.	**150500.11. 12.☐**	**151500.11. 12.☐**	112
12.	**150500.12. 12.☐**	**151500.12. 12.☐**	125
13.	**150500.13. 12.☐**	**151500.13. 12.☐**	137
15.	**150500.15. 12.☐**	**151500.15. 12.☐**	150
16.	**150500.16. 12.☐**	**151500.16. 12.☐**	162
169.	**150500.169.12.☐**	**151500.169.12.☐**	169
17.	**150500.17. 12.☐**	**151500.17. 12.☐**	175
182.	**150500.182.12.☐**	**151500.182.12.☐**	182
18.	**150500.18. 12.☐**	**151500.18. 12.☐**	187
20.	**150500.20. 12.☐**	**151500.20. 12.☐**	200
207.	**150500.207.12.☐**	**151500.207.12.☐**	207
21.	**150500.21. 12.☐**	**151500.21. 12.☐**	212
22.	**150500.22. 12.☐**	**151500.22. 12.☐**	225
23.	**150500.23. 12.☐**	**151500.23. 12.☐**	237
25.	**150500.25. 12.☐**	**151500.25. 12.☐**	250
26.	**150500.26. 12.☐**	**151500.26. 12.☐**	262
27.	**150500.27. 12.☐**	**151500.27. 12.☐**	275

Width index	KMA full set		
	Part No. pivoting	Part No. locking	*Bi* [mm]
28.	**150500.28. 12.☐**	**151500.28. 12.☐**	287
30.	**150500.30. 12.☐**	**151500.30. 12.☐**	300
31.	**150500.31. 12.☐**	**151500.31. 12.☐**	312
32.	**150500.32. 12.☐**	**151500.32. 12.☐**	325
33.	**150500.33. 12.☐**	**151500.33. 12.☐**	337
35.	**150500.35. 12.☐**	**151500.35. 12.☐**	350
36.	**150500.36. 12.☐**	**151500.36. 12.☐**	362
37.	**150500.37. 12.☐**	**151500.37. 12.☐**	375
38.	**150500.38. 12.☐**	**151500.38. 12.☐**	387
40.	**150500.40. 12.☐**	**151500.40. 12.☐**	400
41.	**150500.41. 12.☐**	**151500.41. 12.☐**	412
42.	**150500.42. 12.☐**	**151500.42. 12.☐**	425
43.	**150500.43. 12.☐**	**151500.43. 12.☐**	437
45.	**150500.45. 12.☐**	**151500.45. 12.☐**	450
46.	**150500.46. 12.☐**	**151500.46. 12.☐**	462
47.	**150500.47. 12.☐**	**151500.47. 12.☐**	475
48.	**150500.48. 12.☐**	**151500.48. 12.☐**	487
50.	**150500.50. 12.☐**	**151500.50. 12.☐**	500
51.	**150500.51. 12.☐**	**151500.51. 12.☐**	512
52.	**150500.52. 12.☐**	**151500.52. 12.☐**	525
53.	**150500.53. 12.☐**	**151500.53. 12.☐**	537
55.	**150500.55. 12.☐**	**151500.55. 12.☐**	550
60.	**150500.60. 12.☐**	**151500.60. 12.☐**	600

(KMA = polymer metal mounting bracket)

Available from stock
Upon request

E4/light **e-tubes** | Series R19850

KMA mounting brackets | Attachment from any side | Pivoting | Locking

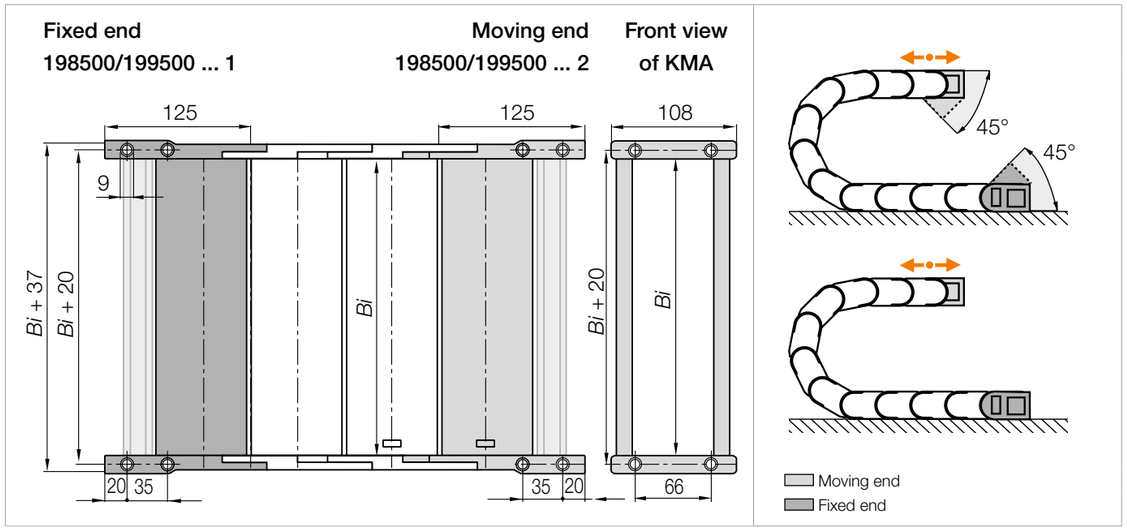

Width index	KMA full set		
	Part No. pivoting	Part No. locking	*Bi* [mm]
07.	**198500.07.12.☐**	**199500.07.12.☐**	75
10.	**198500.10.12.☐**	**199500.10.12.☐**	100
12.	**198500.12.12.☐**	**199500.12.12.☐**	125
15.	**198500.15.12.☐**	**199500.15.12.☐**	150
17.	**198500.17.12.☐**	**199500.17.12.☐**	175
20.	**198500.20.12.☐**	**199500.20.12.☐**	200

Width index	KMA full set		
	Part No. pivoting	Part No. locking	*Bi* [mm]
25.	**198500.25.12.☐**	**199500.25.12.☐**	250
27.	**198500.27.12.☐**	**199500.27.12.☐**	275
30.	**198500.30.12.☐**	**199500.30.12.☐**	300
35.	**198500.35.12.☐**	**199500.35.12.☐**	350
40.	**198500.40.12.☐**	**199500.40.12.☐**	400
46.	**198500.46.12.☐**	**199500.46.12.☐**	462

(KMA = polymer metal mounting bracket)

Order key

150500.30.12.C.A2

Series	Width index	Full set	C-profile option	Pre-fitted
150500	30	12	C	A2

Note: Possible orientations for KMA mounting brackets. For mounting brackets pre-fitted **without strain relief**, please add index **.A**. For types pre-fitted **with strain relief** please add index **.A1**, **.A2**, **.A3** or **.A4**.



For the C-profile option please add index **.C**.

Available from stock
Upon request

Interior separation | Increase cable service life

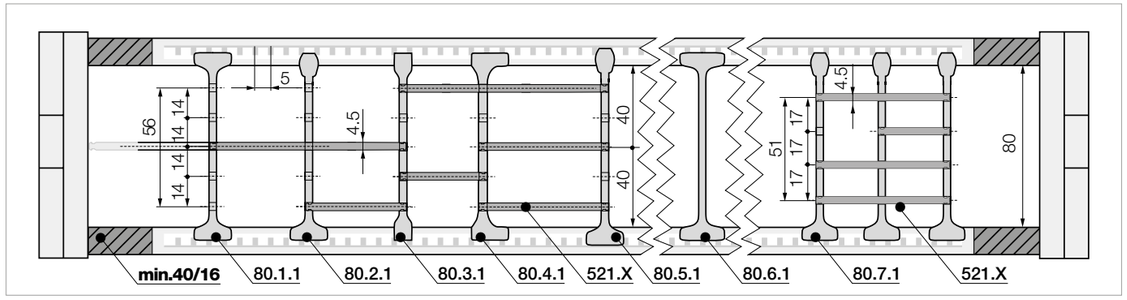

Note: Please be aware of the minimum lateral gap to the side links! **e-tube: 40mm**| **e-chain®: 16mm**
As standard separators are fitted every 2nd e-chain® link!


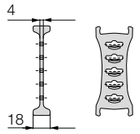

Part No.	
Standard separator	
unassembled	**80.1**
assembled	**80.1.1**

For all applications
Standard separator with a wide base for maximum holding force.


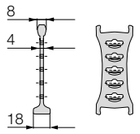

Part No.	
Separator, narrow top	
unassembled	**80.2**
assembled	**80.2.1**

For even faster installation
Wide on one side for high holding force, narrow on opposite side for easy cable fitting.


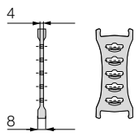

Part No.	
Separator, narrow	
unassembled	**80.3**
assembled	**80.3.1**

For a large number of thin cables
Separator with a narrow base for a large number of thin cables side by side. Saves space.


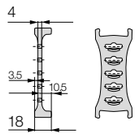

Part No.	
Separator, asymmetrical	
unassembled	**80.4**
assembled	**80.4.1**

For side-mounted applications
Asymmetrical separator, for defined gap distance. No additional spacers required.


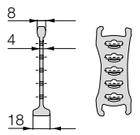

Part No.	
Notch separator	
unassembled	**80.5**
assembled	**80.5.1**

Locks securely in preset increments
Notch separator for exact positioning. Recommended for side-mounted applications.


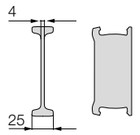

Part No.	
Notch locking separator*	
unassembled	**80.6**
assembled	**80.6.1**

Notch locking separator for increased holding force
For higher crossbar opening forces for high humidity and/or large hydraulic hoses. They can be positioned precisely and then locked in position.


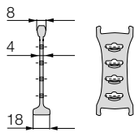

Part No.	
Separator, one end locking	
unassembled	**80.7**
assembled	**80.7.1**

Separator, one end locking
Offset slots for more variability in horizontal subdivisions.

*Only suitable for e-chains®

E4/light | Series 15050 / 15150 / R19850

15050
15150
R19850

Interior separation | To allow faster filling

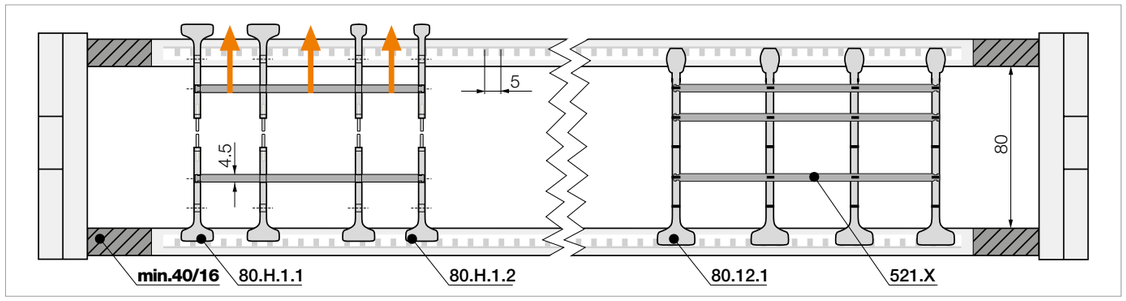

Note: Please be aware of the minimum lateral gap to the side links! **e-tube: 40mm**| **e-chain®: 16mm**
As standard separators are fitted every 2nd e-chain® link!


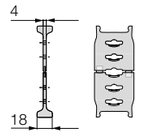

Part No.	
Split separator, wide top	
unassembled	**80.H.1**
assembled	**80.H.1.1**


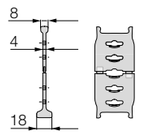

Part No.	
Split separator, narrow top	
unassembled	**80.H.2**
assembled	**80.H.2.1**

Split separators
In order to fill e-chains® more easily and effectively, these separators can be split in the middle. This allows easier access to middle shelf partitions. Fast assembly and easy retrofit. 2 types available: with wide or narrow top.


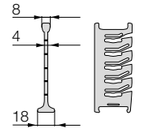

Part No.	
Lean separator	
unassembled	**80.12**
assembled	**80.12.1**

Lean separators[1)]
Quick fitting of shelves in several layers. Enables extremely fast replacement of individual cables in very full e-chains®. Only suitable for e-chains®.

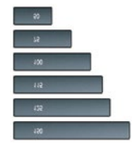
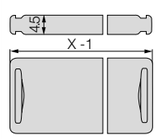

Part No.	
Shelf	
unassembled	**520.X**
assembled	**521.X**

Horizontal separation
Full-width shelf locks securely into separators at both ends, giving a fixed width. Can be used as full-width or modular shelving.

Width [mm]	Part No. unassembled	Part No. assembled
050	**520.050**	**521.050**
065	**520.065**	**521.065**
075	**520.075**	**521.075**
100	**520.100**	**521.100**
125	**520.125**	**521.125**
150	**520.150**	**521.150**
175	**520.175**	**521.175**
200	**520.200**	**521.200**
225	**520.225**	**521.225**
250	**520.250**	**521.250**
300	**520.300**	**521.300**
350	**520.350**	**521.350**
375	**520.375**	**521.375**
387	**520.387**	**521.387**
450	**520.450**	**521.450**



Lean separator for even faster filling: quickly insert several layers of cables into the e-chain® and reduce the installation time by up to 50%. Measured on a 4m long e-chain® fitted with 12 cables. **1) Note: Please combine a maximum of four lean separators with one shelf. Not suitable for side-mounted e-chains®!**

Available from stock
Upon request

Product range



Part No. e-chains® with crossbars every link	Part No. e-chains® with crossbars every 2nd link	*Bi* [mm]	*Ba* [mm]	15250 [kg/m]	15350 [kg/m]
15250. 05.□.0	15350. 05.□.0	50	80	≈ 3.64	≈ 3.56
15250. 06.□.0	15350. 06.□.0	68	98	≈ 3.72	≈ 3.60
15250. 07.□.0	15350. 07.□.0	75	105	≈ 3.74	≈ 3.61
15250.087.□.0	15350.087.□.0	87	117	≈ 3.79	≈ 3.63
15250.097.□.0	15350.097.□.0	97	127	≈ 3.83	≈ 3.65
15250. 10.□.0	15350. 10.□.0	100	130	≈ 3.85	≈ 3.66
15250. 11.□.0	15350. 11.□.0	108	138	≈ 3.87	≈ 3.67
15250.112.□.0	15350.112.□.0	112	143	≈ 3.88	≈ 3.68
15250. 12.□.0	15350. 12.□.0	125	155	≈ 3.95	≈ 3.71
15250.137.□.0	15350.137.□.0	137	167	≈ 3.98	≈ 3.73
15250. 15.□.0	15350. 15.□.0	150	180	≈ 4.04	≈ 3.75
15250.162.□.0	15350.162.□.0	162	193	≈ 4.06	≈ 3.76
15250. 17.□.0	15350. 17.□.0	168	198	≈ 4.11	≈ 3.79
15250. 18.□.0	15350. 18.□.0	175	205	≈ 4.12	≈ 3.80
15250.187.□.0	15350.187.□.0	187	218	≈ 4.15	≈ 3.81
15250. 20.□.0	15350. 20.□.0	200	230	≈ 4.23	≈ 3.85
15250.212.□.0	15350.212.□.0	212	243	≈ 4.26	≈ 3.86
15250. 23.□.0	15350. 23.□.0	225	255	≈ 4.32	≈ 3.89
15250.237.□.0	15350.237.□.0	237	268	≈ 4.34	≈ 3.90
15250. 25.□.0	15350. 25.□.0	250	280	≈ 4.42	≈ 3.94
15250.262.□.0	15350.262.□.0	262	293	≈ 4.47	≈ 3.97
15250. 28.□.0	15350. 28.□.0	275	305	≈ 4.51	≈ 3.99
15250. 29.□.0	15350. 29.□.0	287	318	≈ 4.53	≈ 4.00
15250. 30.□.0	15350. 30.□.0	300	330	≈ 4.61	≈ 4.04
15250.312.□.0	15350.312.□.0	312	343	≈ 4.63	≈ 4.05
15250.325.□.0	15350.325.□.0	325	355	≈ 4.69	≈ 4.08
15250.337.□.0	15350.337.□.0	337	368	≈ 4.73	≈ 4.10
15250.350.□.0	15350.350.□.0	350	380	≈ 4.87	≈ 4.17
15250.362.□.0	15350.362.□.0	362	393	≈ 4.92	≈ 4.20
15250.375.□.0	15350.375.□.0	375	405	≈ 4.97	≈ 4.22
15250.387.□.0	15350.387.□.0	387	418	≈ 5.01	≈ 4.24
15250.400.□.0	15350.400.□.0	400	430	≈ 5.05	≈ 4.26

Available bend radii *R* [mm] | 150 | 200 | 250 | 300 | 350 | 400 | 500 | 600 |

Order key

15350.20.300.0

Series | Width index | Bend radius | Colour index

Order example:
Complete Part No. with the required radius □. Example:
15250.20.300.0 = crossbars removable along the inner and outer radius
15350.20.300.0 = crossbars removable along the inner and outer radius
Order index for colour options ▶ **www.igus.eu/info-colours**

Available from stock
Upon request

Unsupported applications | Short travels

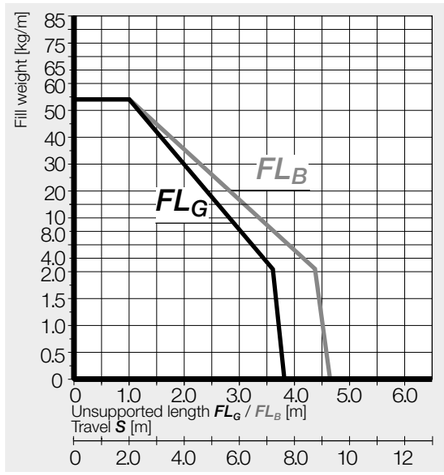

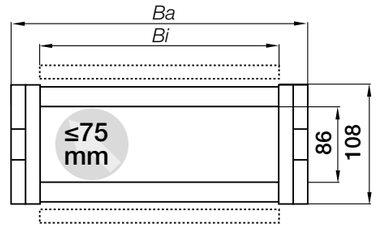

Inner height [mm]	86
Pitch [mm]	91
Links/m [pc.]	11
corresponds to [mm]	1,001
e-chain® length	$L_K = S/2 + K$

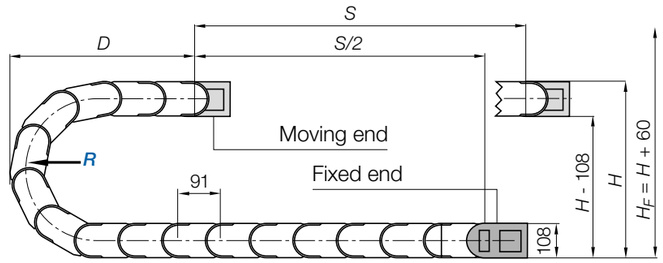

R	150	200	250	300	350	400	500	600
H_{-25}^{0}	408	508	608	708	808	908	1,108	1.308
D	341	391	441	491	541	591	691	791
K	655	815	970	1,125	1,285	1,440	1.755	2,070

The required clearance height: $H_F = H + 60$mm (with 3.0kg/m fill weight)

Gliding applications | For travel lengths from 12m to max. 250m

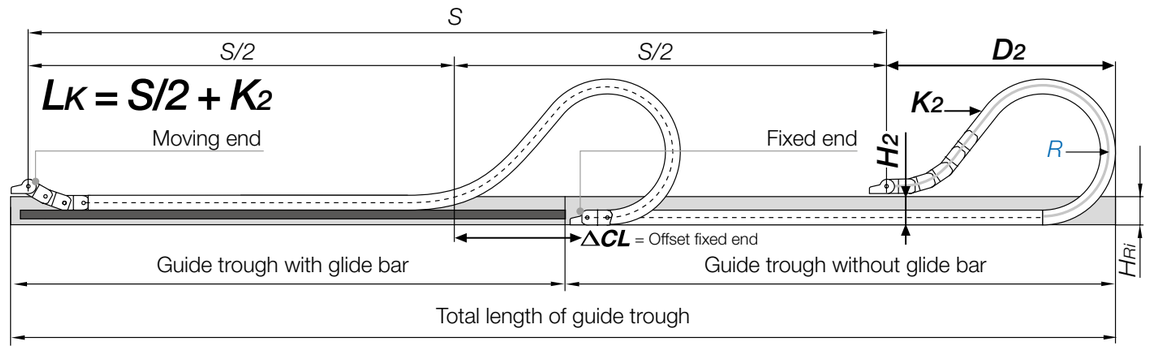

R	150	200	250	300	350	400	500	600[1)]
H_2	242	242	242	242	242	242	242	–
D_2^{+50}	550	800	950	1,200	1,550	1,700	2,175	–
K_2	910	1,274	1,638	2,002	2,457	2,730	3,458	–
ΔCL	209	409	509	709	1,009	1,109	1,339	–

Note: In case of travels between 9 and 12m we recommend an e-chain® with a longer unsupported length.
1) Not suitable for long travel applications. Please consult igus®.

Available from stock
Upon request

KMA mounting brackets | Attachment from any side | Pivoting | Locking

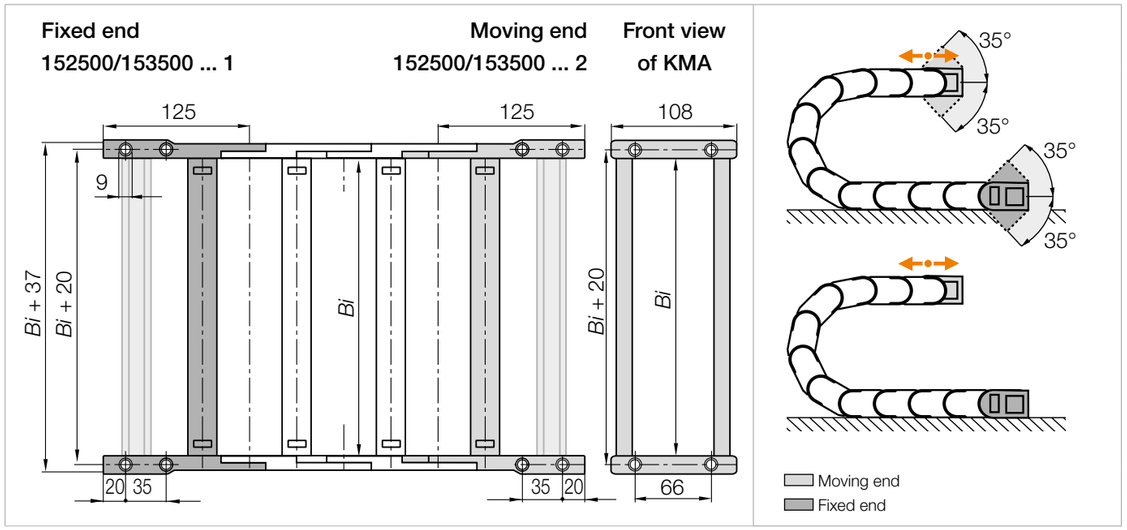

Width index	KMA full set Part No. pivoting	Part No. locking	*Bi* [mm]
05.	152500.05. 12.☐	153500.05. 12.☐	50
06.	152500.06. 12.☐	153500.06. 12.☐	68
07.	152500.07. 12.☐	153500.07. 12.☐	75
087.	152500.087.12.☐	153500.087.12.☐	87
097.	152500.097.12.☐	153500.097.12.☐	97
10.	152500.10. 12.☐	153500.10. 12.☐	100
11.	152500.11. 12.☐	153500.11. 12.☐	108
112.	152500.112.12.☐	153500.112.12.☐	112
12.	152500.12. 12.☐	153500.12. 12.☐	125
137.	152500.137.12.☐	153500.137.12.☐	137
15.	152500.15. 12.☐	153500.15. 12.☐	150
162.	152500.162.12.☐	153500.162.12.☐	162
17.	152500.17. 12.☐	153500.17. 12.☐	168
18.	152500.18. 12.☐	153500.18. 12.☐	175
187.	152500.187.12.☐	153500.187.12.☐	187
20.	152500.20. 12.☐	153500.20. 12.☐	200

Width index	KMA full set Part No. pivoting	Part No. locking	*Bi* [mm]
212.	152500.212.12.☐	153500.212.12.☐	212
23.	152500.23. 12.☐	153500.23. 12.☐	225
237.	152500.237.12.☐	153500.237.12.☐	237
25.	152500.25. 12.☐	153500.25. 12.☐	250
262.	152500.262.12.☐	153500.262.12.☐	262
28.	152500.28. 12.☐	153500.28. 12.☐	275
29.	152500.29. 12.☐	153500.29. 12.☐	287
30.	152500.30. 12.☐	153500.30. 12.☐	300
312.	152500.312.12.☐	153500.312.12.☐	312
325.	152500.325.12.☐	153500.325.12.☐	325
337.	152500.337.12.☐	153500.337.12.☐	337
350.	152500.350.12.☐	153500.350.12.☐	350
362.	152500.362.12.☐	153500.362.12.☐	362
375.	152500.375.12.☐	153500.375.12.☐	375
387.	152500.387.12.☐	153500.387.12.☐	387
400.	152500.400.12.☐	153500.400.12.☐	400

(KMA = polymer metal mounting bracket)

Order key

152500.20.12.C.A2

Series	Width index	Full set	C-profile option	Pre-fitted
152500	20	12	C	A2

Note: Possible orientations for KMA mounting brackets. For mounting brackets pre-fitted **without strain relief**, please add index **.A**. For types pre-fitted **with strain relief** please add index **.A1**, **.A2**, **.A3** or **.A4**.



For the C-profile option please add index **.C**.

Interior separation | Increase cable service life

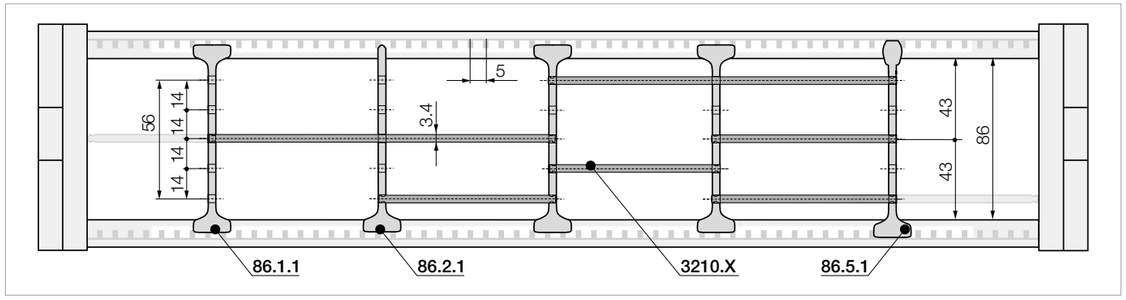

No lateral gap to side links necessary.
As standard separators are fitted every 2nd e-chain® link!

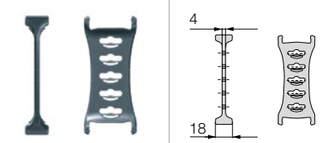

Part No. Standard separator	
unassembled	**86.1**
assembled	**86.1.1**

For all applications

Standard separator with a wide base for maximum holding force.

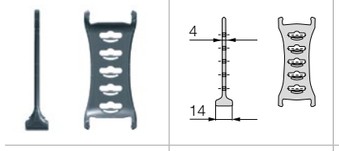

Part No. Separator, narrow top	
unassembled	**86.2**
assembled	**86.2.1**

For even faster installation

Wide on one side for high holding force, narrow on opposite side for easy cable fitting.

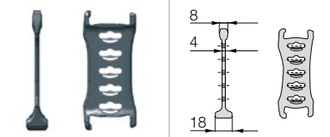

Part No. Notch separator*	
unassembled	**86.5**
assembled	**86.5.1**

Locks securely in preset increments

Notch separator* for exact positioning. Recommended for side-mounted applications. *Suitable from ***Bi*** 75

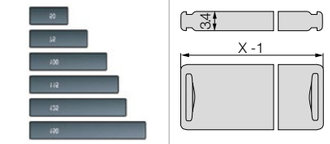

Part No. Shelf	
unassembled	**3200.X**
assembled	**3210.X**

Horizontal separation

Full-width shelf locks securely into separators at both ends, giving a fixed width. Can be used as full-width or modular shelving.

Width [mm]	Part No. unassembled	Part No. assembled
050	**3200.050**	**3210.050**
075	**3200.075**	**3210.075**
100	**3200.100**	**3210.100**

Width [mm]	Part No. unassembled	Part No. assembled
115	**3200.115**	**3210.115**
125	**3200.125**	**3210.125**
150	**3200.150**	**3210.150**

Width [mm]	Part No. unassembled	Part No. assembled
175	**3200.175**	**3210.175**
200	**3200.200**	**3210.200**
225	**3200.225**	**3210.225**

Width [mm]	Part No. unassembled	Part No. assembled
250	**3200.250**	**3210.250**

Interior separation | To allow faster filling

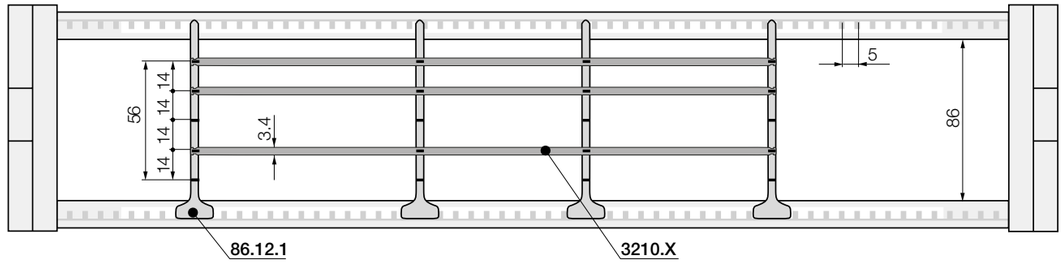

No lateral gap to side links necessary.
As standard separators are fitted every 2nd e-chain® link!

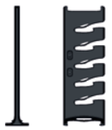

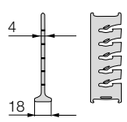

Part No.	
Lean separator[1)]	
unassembled	**86.12**
assembled	**86.12.1**

Lean separators[1)]

Quick fitting of shelves in several layers. Enables extremely fast replacement of individual cables in very full e-chains®. Only suitable for e-chains®.

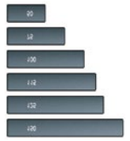

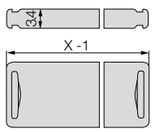

Part No.	
Shelf	
unassembled	**3200.X**
assembled	**3210.X**

Horizontal separation

Full-width shelf locks securely into separators at both ends, giving a fixed width. Can be used as full-width or modular shelving.

Width [mm]	Part No. unassembled	Part No. assembled
050	**3200.050**	**3210.050**
075	**3200.075**	**3210.075**
100	**3200.100**	**3210.100**

Width [mm]	Part No. unassembled	Part No. assembled
115	**3200.115**	**3210.115**
125	**3200.125**	**3210.125**
150	**3200.150**	**3210.150**

Width [mm]	Part No. unassembled	Part No. assembled
175	**3200.175**	**3210.175**
200	**3200.200**	**3210.200**
225	**3200.225**	**3210.225**

Width [mm]	Part No. unassembled	Part No. assembled
250	**3200.250**	**3210.250**



Lean separator for even faster filling: quickly insert several layers of cables into the e-chain® and reduce the installation time by up to 50%. Measured on a 4m long e-chain® fitted with 12 cables. **1) Note: Please combine a maximum of four lean separators with one shelf. Not suitable for side-mounted e-chains®!**

Available from stock
Upon request

Product range

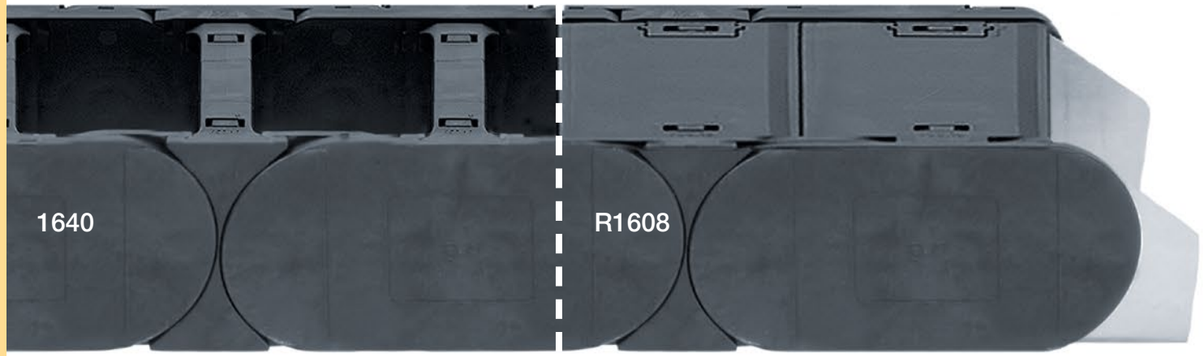

Part No. e-chains® with crossbars every link	Part No. e-tubes closed	Bi [mm]	Ba [mm]	1640 [kg/m]	R1608 [kg/m]
1640. 05.□.0	–	50	84	≈ 5.10	–
1640. 055.□.0	–	55	89	≈ 5.14	–
1640. 06.□.0	–	65	99	≈ 5.18	–
1640. 07.□.0	–	75	109	≈ 5.27	–
1640. 08.□.0	–	87	121	≈ 5.31	–
1640. 10.□.0	–	100	134	≈ 5.36	–
1640. 11.□.0	–	112	146	≈ 5.45	–
1640. 12.□.0	–	125	159	≈ 5.54	–
1640. 13.□.0	–	137	171	≈ 5.63	–
1640. 15.□.0	–	150	184	≈ 5.67	–
1640. 16.□.0	–	162	196	≈ 5.74	–
1640. 169.□.0	–	169	204	≈ 5.82	–
1640. 17.□.0	–	175	209	≈ 5.81	–
1640. 182.□.0	–	182	217	≈ 5.85	–
1640. 18.□.0	–	187	221	≈ 5.88	
1640. 20.□.0	1608.20.□.0	200	234	≈ 5.89	≈ 7.69
1640. 207.□.0	–	207	242	≈ 5.95	–
1640. 21.□.0	–	212	246	≈ 5.96	–
1640. 22.□.0	–	225	259	≈ 6.01	–
1640. 23.□.0	–	237	271	≈ 6.09	
1640. 25.□.0	1608.25.□.0	250	284	≈ 6.15	≈ 8.39
1640. 26.□.0	–	262	296	≈ 6.20	–
1640. 27.□.0	–	275	309	≈ 6.27	–

Part No. e-chains® with crossbars every link	Part No. e-tubes closed	Bi [mm]	Ba [mm]	1640 [kg/m]	R1608 [kg/m]
1640. 28.□.0	–	287	321	≈ 6.29	–
1640. 30.□.0	1608.30.□.0	300	334	≈ 6.34	≈ 9.09
1640. 31.□.0	–	312	346	≈ 6.41	–
1640. 32.□.0	–	325	359	≈ 6.48	–
1640. 33.□.0	–	337	371	≈ 6.59	–
1640. 35.□.0	1608.35.□.0	350	384	≈ 6.61	≈ 9.79
1640. 36.□.0	–	362	396	≈ 6.67	–
1640. 37.□.0	–	375	409	≈ 6.71	–
1640. 38.□.0	–	387	421	≈ 6.76	–
1640. 40.□.0	1608.40.□.0	400	434	≈ 6.89	≈ 10.49
1640. 41.□.0	–	412	446	≈ 6.99	–
1640. 42.□.0	–	425	459	≈ 7.08	–
1640. 43.□.0	–	437	471	≈ 7.13	–
1640. 45.□.0	–	450	484	≈ 7.17	–
1640. 46.□.0	–	462	496	≈ 7.18	–
1640. 47.□.0	–	475	509	≈ 7.22	–
1640. 48.□.0	–	487	521	≈ 7.27	–
1640. 50.□.0	1608.50.□.0	500	534	≈ 7.35	≈ 11.78
1640. 51.□.0	–	512	546	≈ 7.36	–
1640. 52.□.0	–	525	559	≈ 7.39	–
1640. 53.□.0	–	537	571	≈ 7.49	–
1640. 55.□.0	–	550	584	≈ 7.80	–
1640. 60.□.0	–	600	634	≈ 7.92	–

Available bend radii *R* [mm] | 200* | 250 | 300 | 350 | 400 | 450 | 500 | 550 | 600 |

* Radius not available for e-tubes.

Order key

1640.30.300.0

Series | Width index | Bend radius | Colour index

Order example:
Complete Part No. with the required radius □. Example:
1640.30.300.0 = crossbars removable along the inner and outer radius
1608.30.300.0 = lids openable along the outer radius from one side
Order index for colour options ▶ **www.igus.eu/info-colours**

Unsupported applications | Short travels

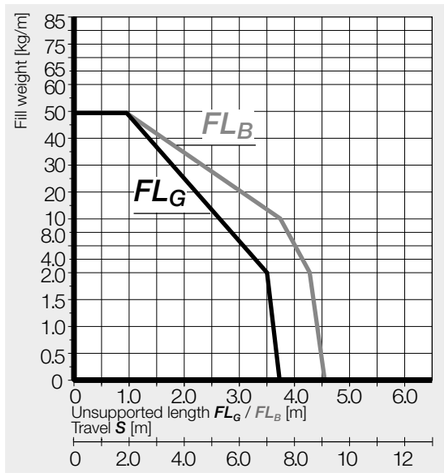

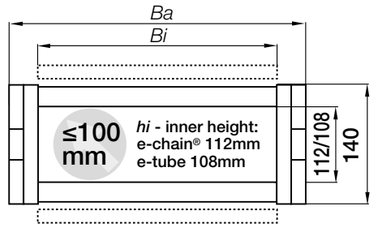

1640 inner height [mm]	112
R1608 inner height [mm]	108
Pitch [mm]	143
Links/m [pc.]	7
corresponds to [mm]	1,001
e-chain® length	$L_K = S/2 + K$

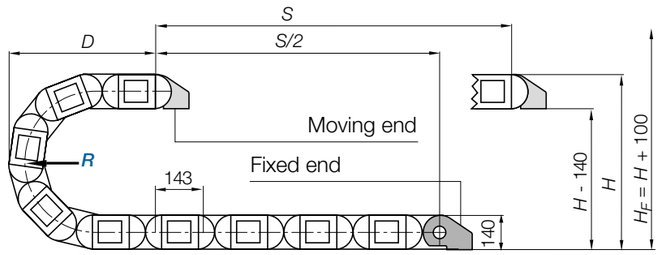

R	200*	250	300	350	400	450	500	550	600
H	540	640	740	840	940	1,040	1,140	1,240	1,340
D	485	535	585	635	685	735	785	835	885
K	915	1,075	1,230	1,390	1,545	1,700	1,860	2,015	2,175

The required clearance height: $H_F = H + 100$mm (with 5.0kg/m fill weight)

* Radius not available for e-tubes.

Gliding applications | For travel lengths from 14m to max. 400m

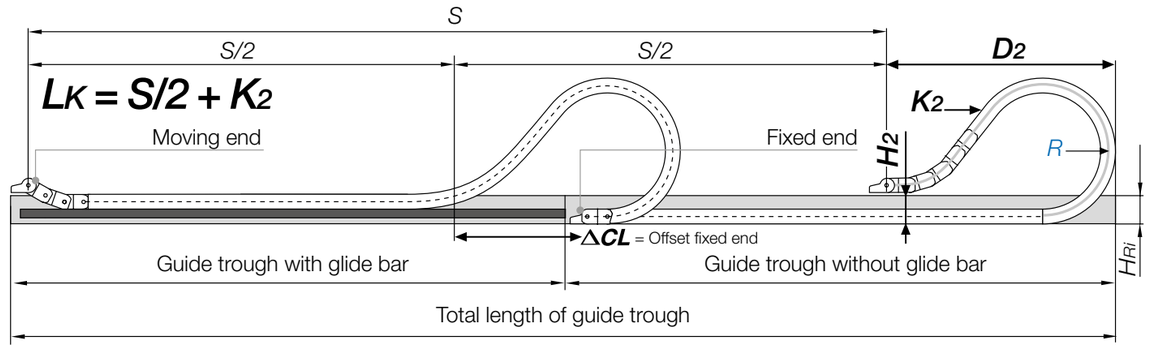

R	200*	250	300	350	400	450	500	550	600
H_2	325	325	325	325	325	325	325	325	325
D_2+50	900	1,000	1,100	1,250	1,450	1,600	1,700	1,900	2,050
K_2	1,573	1,716	1,859	2,288	2,574	2,860	3,146	3,432	3,861
ΔCL	450	500	550	650	800	900	950	1,100	1,200

Note: In case of travels between 9 and 14m we recommend an e-chain® with a longer unsupported length.

* Radius not available for e-tubes.

Available from stock
Upon request

Steel mounting brackets | Attachment from any side | Pivoting

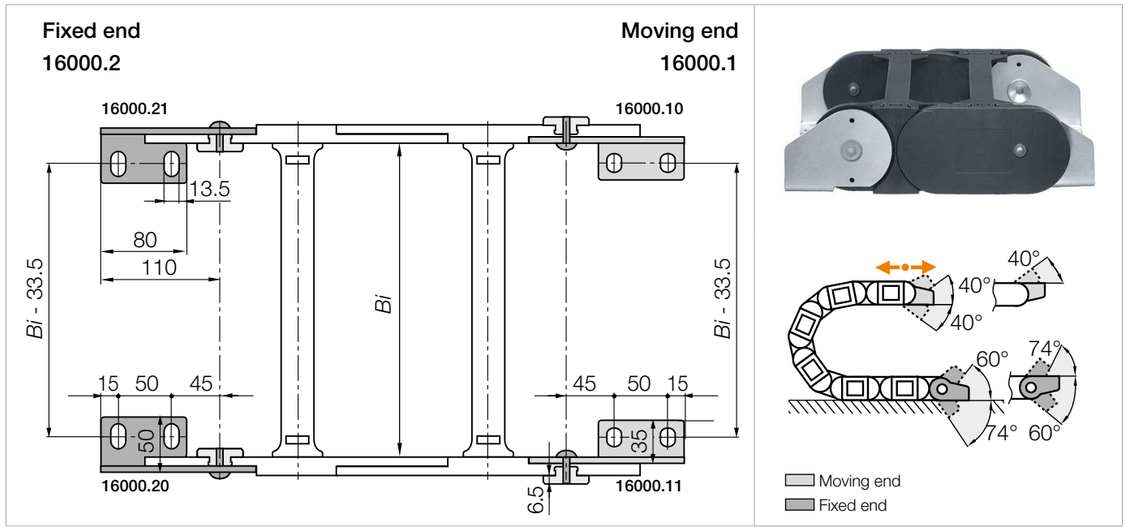

Part No. Full set	
Steel	**Description**
pivoting	**Mounting bracket**
16000.[1].12.VS.E45	Full set (both ends) ending with outer side link, screwed - standard
16000.[3].12.VS.E45	Full set (both ends) beginning with outer side link (moving end) - ending with inner side link (fixed end), screwed - standard

Stainless steel version available. Please add index **.E45** (material: AISI 304)

Note: The e-chains® may end with either an inner or an outer side link. An outer side link should always be the first e-chain® link at the moving end. Please specify the index [1] (for odd) or [3] (for even) depending on an even or odd number of links required. For the best appearance, make sure the e-chain® ends with [1] outer side links whenever possible (with odd number of links).

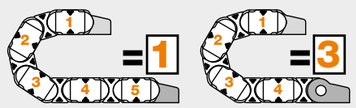

Order key

16000.[1].12 .VS.A2

Series	Odd number of links	Full set, locking	Pre-fitted	Pre-fitted

Note: Possible variations for pre-fitted mounting brackets. To receive steel mounting brackets pre-fitted please add index **.A1**, **.A2**, **.A3** or **.A4**.

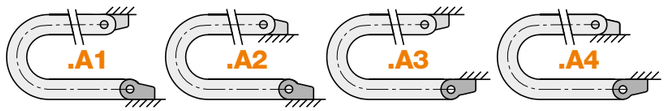

Available from stock
Upon request

Interior separation | Increase cable service life

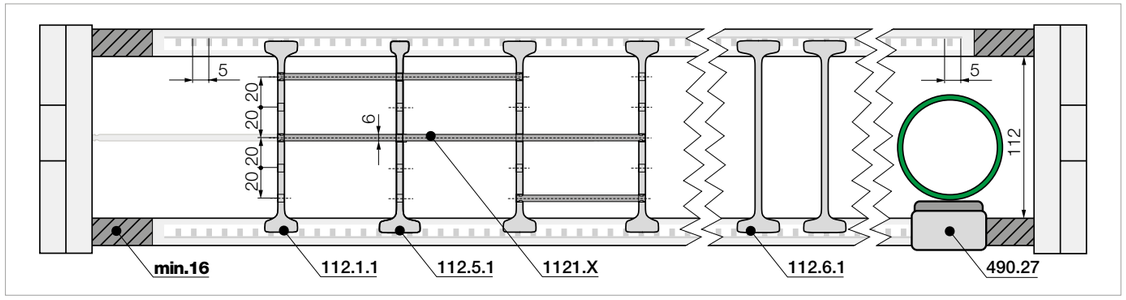

Note: Please be aware of the minimum lateral gap to the side links! **e-chain®: =16mm**
As standard separators are fitted every 2nd e-chain® link!

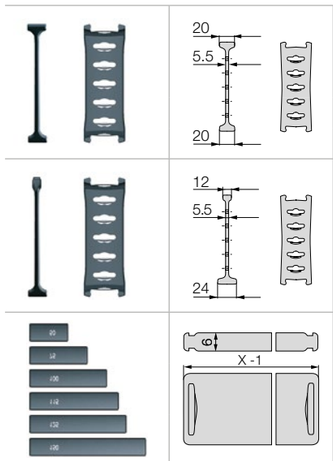

Part No. Standard separator	
unassembled	**112.1**
assembled	**112.1.1**

For all applications
Standard separator with a wide base for maximum holding force.

Part No. Notch separator	
unassembled	**112.5**
assembled	**112.5.1**

Locks securely in preset increments
Notch separator for exact positioning. Recommended for side-mounted applications.

Part No. Shelf	
unassembled	**1120.X**
assembled	**1121.X**

Horizontal separation
Full-width shelf locks securely into separators at both ends, giving a fixed width. Can be used as full-width or modular shelving.

Width [mm]	Part No. unassembled	Part No. assembled
050	**1120.050**	**1121.050**
065	**1120.065**	**1121.065**
075	**1120.075**	**1121.075**
100	**1120.100**	**1121.100**
125	**1120.125**	**1121.125**
150	**1120.150**	**1121.150**
175	**1120.175**	**1121.175**
200	**1120.200**	**1121.200**
225	**1120.225**	**1121.225**
250	**1120.250**	**1121.250**
300	**1120.300**	**1121.300**
350	**1120.350**	**1121.350**
375	**1120.375**	**1121.375**
387	**1120.387**	**1121.387**
450	**1120.450**	**1121.450**

Interior separation | Other optional elements

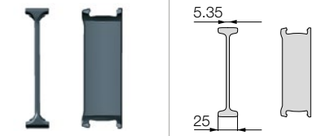

Part No. Notch locking separator	
unassembled	**112.6**
assembled	**112.6.1**

Notch locking separator for increased holding force
For higher crossbar opening forces for high humidity and/or large hydraulic hoses. They can be positioned precisely and then locked in position.

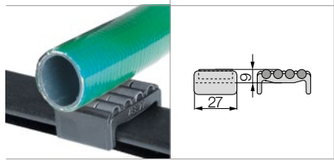

Part No. Rollclip	
unassembled	**489.27**
assembled	**490.27**

Minimises abrasion of sensitive hoses
The rollclip simply clamps onto the opening crossbar. The movable rollers compensate for relative movement between the e-chain® and hose.

All interior separations on this page are only suitable for e-chains®!

Interior separation | Increase cable service life

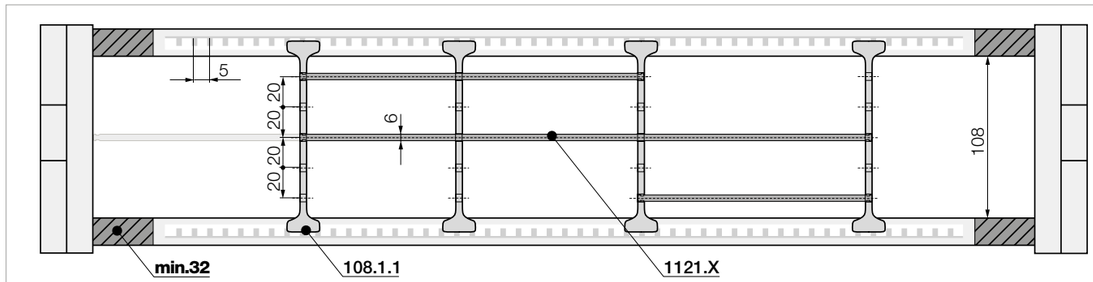

Note: Please be aware of the minimum lateral gap to the side links! **e-tubes: 32mm**
As standard separators are fitted every 2nd e-chain® link!



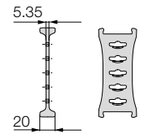

Part No.	
Standard separator	
unassembled	**108.1**
assembled	**108.1.1**

For all applications

Standard separator with a wide base for maximum holding force.

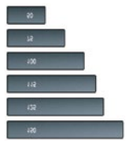

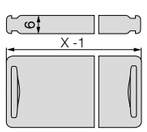

Part No.	
Shelf	
unassembled	**1120.X**
assembled	**1121.X**

Horizontal separation

Full-width shelf locks securely into separators at both ends, giving a fixed width. Can be used as full-width or modular shelving.

Width [mm]	Part No. unassembled	Part No. assembled	Width [mm]	Part No. unassembled	Part No. assembled	Width [mm]	Part No. unassembled	Part No. assembled	Width [mm]	Part No. unassembled	Part No. assembled
050	**1120.050**	**1121.050**	125	**1120.125**	**1121.125**	225	**1120.225**	**1121.225**	375	**1120.375**	**1121.375**
065	**1120.065**	**1121.065**	150	**1120.150**	**1121.150**	250	**1120.250**	**1121.250**	387	**1120.387**	**1121.387**
075	**1120.075**	**1121.075**	175	**1120.175**	**1121.175**	300	**1120.300**	**1121.300**	450	**1120.450**	**1121.450**
100	**1120.100**	**1121.100**	200	**1120.200**	**1121.200**	350	**1120.350**	**1121.350**			

All interior separations on this page are only suitable for e-tubes!

Available from stock
Upon request

Interior separation | To allow faster filling

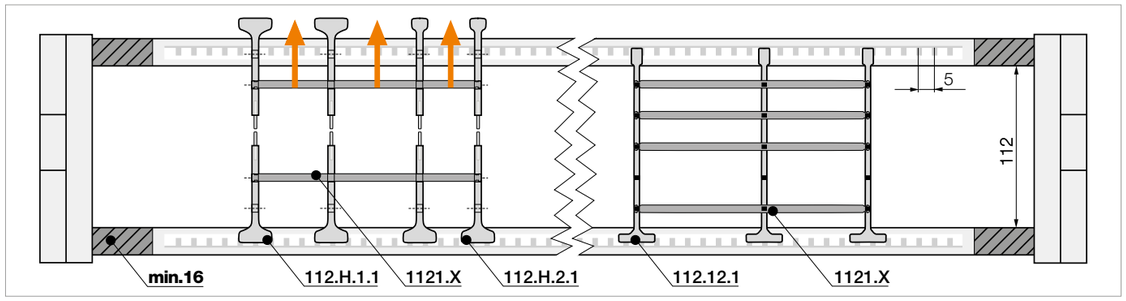

Note: Please be aware of the minimum lateral gap to the side links! **e-chain®: =16mm**
As standard separators are fitted every 2nd e-chain® link!



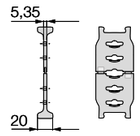

Part No.	
Split separator, wide top	
unassembled	**112.H.1**
assembled	**112.H.1.1**



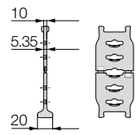

Part No.	
Split separator, narrow top	
unassembled	**112.H.2**
assembled	**112.H.2.1**

Split separators

In order to fill e-chains® more easily and effectively, these separators can be split in the middle. This allows easier access to middle shelf partitions. Fast assembly and easy retrofit. 2 types available: with wide or narrow top.



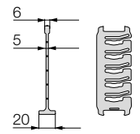

Part No.	
Lean separator[1)]	
unassembled	**112.12**
assembled	**112.12.1**

Lean separators[1)]

Quick fitting of shelves in several layers. Enables extremely fast replacement of individual cables in very full e-chains®. Only suitable for e-chains®.



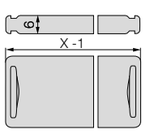

Part No.	
Shelf	
unassembled	**1120.X**
assembled	**1121.X**

Horizontal separation

Full-width shelf locks securely into separators at both ends, giving a fixed width. Can be used as full-width or modular shelving.

Width [mm]	Part No. unassembled	Part No. assembled	Width [mm]	Part No. unassembled	Part No. assembled	Width [mm]	Part No. unassembled	Part No. assembled	Width [mm]	Part No. unassembled	Part No. assembled
50	**1.120.050**	**1.121.050**	125	**1.120.125**	**1.121.125**	225	**1.120.225**	**1.121.225**	375	**1.120.375**	**1.121.375**
65	**1.120.065**	**1.121.065**	150	**1.120.150**	**1.121.150**	250	**1.120.250**	**1.121.250**	387	**1.120.387**	**1.121.387**
75	**1.120.075**	**1.121.075**	175	**1.120.175**	**1.121.175**	300	**1.120.300**	**1.121.300**	450	**1.120.450**	**1.121.450**
100	**1.120.100**	**1.121.100**	200	**1.120.200**	**1.121.200**	350	**1.120.350**	**1.121.350**			



Lean separator for even faster filling: quickly insert several layers of cables into the e-chain® and reduce the installation time by up to 50%. Measured on a 4m long e-chain® fitted with 12 cables. **1) Note: Please combine a maximum of four lean separators with one shelf. Not suitable for side-mounted e-chains®!**

All interior separations on this page are only suitable for e-chains®!

Available from stock
Upon request



Diagram shows YEHD/YRHD series

Tough, vibration-proof and compact - YE and YEHD hybrid e-chains®

The hybrid energy chain YE is the best mix of lightweight plastic and tough steel that can easily handle high unsupported travels. It was developed to meet the requirements of construction machinery and lifting equipment. The requirement was to offer the maximum possible unsupported length with compact dimensions and the lowest possible weight. However, pure steel energy chains have the disadvantages of high assembly costs and weight. The YE system combines the higher strength of steel elements with the low weight and flexibility of plastic components. In addition, no screws, rivets or bolts are used, which can loosen under vibration.

Benefits

- Almost 50% lighter than comparable steel chains
- YE.42: 91% longer unsupported length compared to E4.42 series
- YE.56: 61% longer unsupported length compared to E4.56 series
- YEHD.112: 68% longer unsupported length compared to E4.112 series
- High tensile strength
- Easy installation of plastic outer links with flange for easy e-chain® link assembly
- Smooth operation due to plastic pin connection
- Flexible interior separation thanks to proven E4 components
- Available as HD version for maximum strength in combination with high fill weights and extreme environments
- Available as ready-to-install readychain® system with cables, hoses and hydraulic components

More information ▶ www.igus.eu/YE

Selection table

Part No.	Inner height *hi* [mm]	Outer height *ha* [mm]	Inner width *Bi* [mm]	Outer width *Ba* [mm]	Bend radius *R* [mm]	Unsupported length ≤ [m]	Page
YE - plastic-steel hybrid e-chains® with crossbars every 2nd link							
Crossbars removable along the inner and outer radius.							
YE.42	42	76	100[1)] - 400	118 - 418	100 - 150	**	**336**
YE.56	56	90	100[1)] - 600	124 - 624	100 - 500	**	**342**
YR - plastic-steel hybrid e-tubes							
Lids openable along the outer radius, from one side.							
YR.42	42	76	100[1)] - 300	118 - 318	125 - 150	**	**336**
YR.56	56	90	100[1)] - 462	124 - 486	150 - 500	**	**342**
YEHD - plastic-steel hybrid e-chains® with crossbars every link, heavy-duty design							
Crossbars removable along the inner and outer radius.							
YEHD.108	108	146	387 - 550	435 - 598	250 - 600	**	**348**
YEHD.112	112	146	200 - 600	248 - 648	250 - 600	**	**348**
YRHD - plastic-steel hybrid e-tubes and tubes, heavy-duty design							
Lids openable along the outer radius, from one side.							
YRHD.108	108	146	200 - 500	248 - 548	250 - 600	**	**348**

1) Widths under ***Bi* 100** available upon request. Here, an inspection and dimensioning by igus® engineering is required in advance.

** Unsupported lengths depending on the angle of inclination, see corresponding graphs on the series pages.

Technical data

General properties	
Speed FL_G/acceleration FL_G	≤ 1m/s / ≤ 1m/s²
Speed FL_B/acceleration FL_B	≤ 1m/s / ≤ 1m/s²
Material - permitted temperature °C	-40°C/+120°C
Flammability class	VDE 0304 IIC UL94-HB

Typical application areas



YE e-chains® and YR e-tubes

- Work platforms
- Construction machinery
- Breakdown lorry
- Telescopic loaders
- Articulated telescopic platforms
- Horizontal drilling rigs
- Articulated arm systems
- Low loaders



YEHD e-chains® and YRHD e-tubes

- Drill rigs
- Large gantry milling machines
- Deep drilling rigs
- Horizontal drilling rigs
- Steel mills
- Large unsupported lengths
- Mechanical engineering
- Plant construction

3D CAD, online tools and more ▶ www.igus.eu/YE

Product range

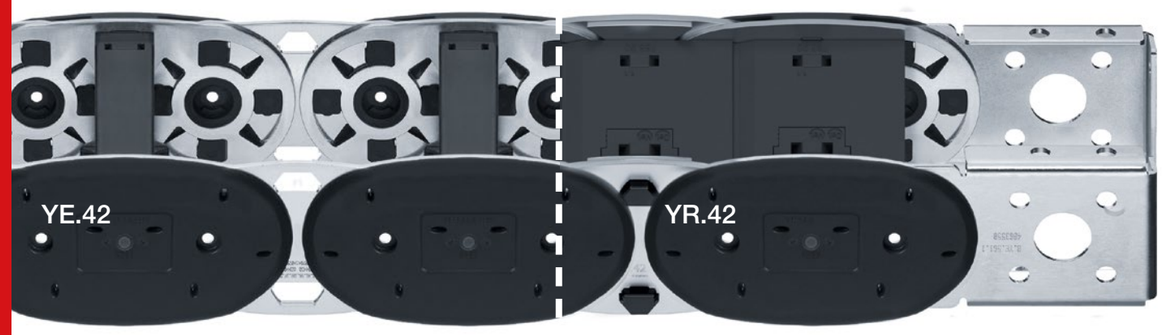

Part No. e-chains® with crossbars every 2nd link	Part No. e-tubes closed	*Bi* [mm]	*Ba* [mm]	YE.42 [kg/m]	YR.42 [kg/m]
YE.42. 05.□.0*	YR.42. 05.□.0*[1]	50	68	≈ 4.020	≈ 4.131
YE.42. 06.□.0*	YR.42. 06.□.0*[1]	68	86	≈ 4.067	≈ 4.217
YE.42. 07.□.0*	YR.42. 07.□.0*	75	93	≈ 4.085	≈ 4.251
YE.42.087.□.0*	YR.42.087.□.0*	87	105	≈ 4.116	≈ 4.309
YE.42. 10.□.0	YR.42. 10.□.0	100	118	≈ 4.150	≈ 4.371
YE.42. 11.□.0	YR.42. 11.□.0	108	126	≈ 4.171	≈ 4.410
YE.42.112.□.0	–	112	130	≈ 4.181	–
YE.42. 12.□.0	YR.42. 12.□.0	125	143	≈ 4.215	≈ 4.491
YE.42.137.□.0	–	137	155	≈ 4.246	–
YE.42. 15.□.0	YR.42. 15.□.0	150	168	≈ 4.280	≈ 4.612
YE.42.162.□.0	–	162	180	≈ 4.311	–
YE.42. 17.□.0	YR.42. 17.□.0	168	186	≈ 4.327	≈ 4.698
YE.42. 18.□.0	–	175	193	≈ 4.345	–
YE.42.187.□.0	–	187	205	≈ 4.376	–
YE.42. 20.□.0	YR.42. 20.□.0	200	218	≈ 4.410	4.852
YE.42.212.□.0	– 212.□.0	212	230	≈ 4.441	–

Part No. e-chains® with crossbars every 2nd link	Part No. e-tubes closed	*Bi* [mm]	*Ba* [mm]	YE.42 [kg/m]	YR.42 [kg/m]
YE.42. 23.□.0	–	225	243	≈ 4.475	–
YE.42.237.□.0	–	237	255	≈ 4.506	–
YE.42. 25.□.0	YR.42. 25.□.0	250	268	≈ 4.540	≈ 5.093
YE.42.262.□.0	–	262	280	≈ 4.571	–
YE.42. 28.□.0	–	275	293	≈ 4.605	–
YE.42. 29.□.0	–	287	305	≈ 4.636	–
YE.42. 30.□.0	YR.42. 30.□.0	300	318	≈ 4.670	≈ 5.334
YE.42.312.□.0	–	312	330	≈ 4.701	–
YE.42.325.□.0	–	325	343	≈ 4.735	–
YE.42.337.□.0	–	337	355	≈ 4.766	–
YE.42.350.□.0	–	350	368	≈ 4.800	–
YE.42.362.□.0	–	362	380	≈ 4.831	–
YE.42.375.□.0	–	375	393	≈ 4.865	–
YE.42.387.□.0	–	387	405	≈ 4.896	–
YE.42.400.□.0	–	400	418	≈ 4.930	–

Available bend radii *R* [mm] | 100[2] | 125 | 150 |

*Widths under ***Bi* 100** available upon request. Here, an inspection and dimensioning by igus® engineering is required in advance.

1) Lid removable, non-openable

2) Radius not available for e-tubes.

Order key

YE.42.11.100.0

Series / Type | Inner height | Width index | Bend radius | Colour index

Order example:

Complete Part No. with the required radius □*R*. **Example:**

YE.42.11.100.0 = crossbars removable along the inner and outer radius

YR.42.11.150.0 = lids openable along the outer radius from one side

Order index for colour options ▶ **www.igus.eu/info-colours**

Available from stock

Upon request

Unsupported applications | Long unsupported lengths, ideal for inclined axes

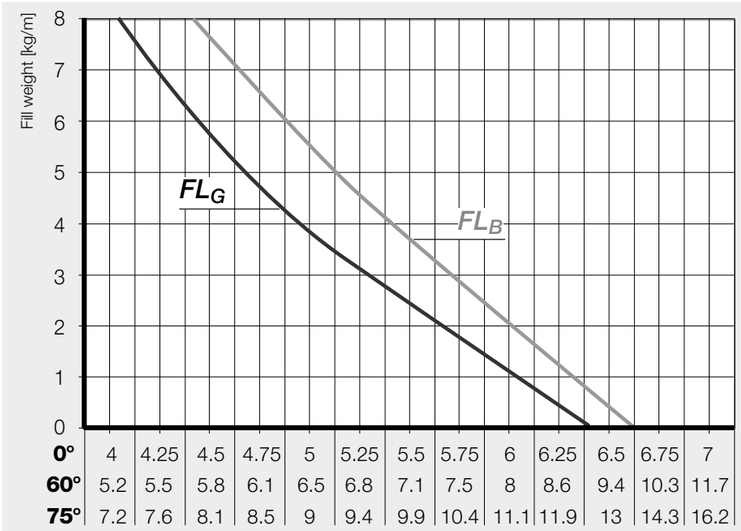

0°	4	4.25	4.5	4.75	5	5.25	5.5	5.75	6	6.25	6.5	6.75	7
60°	5.2	5.5	5.8	6.1	6.5	6.8	7.1	7.5	8	8.6	9.4	10.3	11.7
75°	7.2	7.6	8.1	8.5	9	9.4	9.9	10.4	11.1	11.9	13	14.3	16.2

Unsupported length ***FL*$_G$** / *FL*$_B$ [m] with **0°** / **60°** / **75°** elevation

Unsupported length [m] with 0° / 60° / 75° elevation

***FL*$_G$** = unsupported with straight upper run

***FL*$_B$** = unsupported with permitted sag

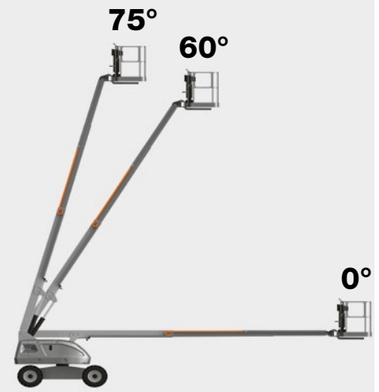

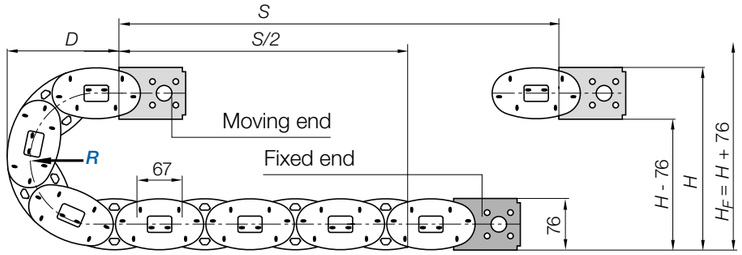

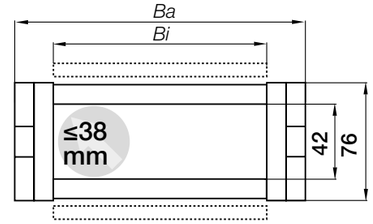

R	100[2]	125	150
H	320	370	420
D	240	265	340
K	450	530	610

The required clearance height: $H_F = H + 76$mm (with 2.5kg/m fill weight)

2) Radius not available for e-tubes.

Inner height [mm]	**42**
Pitch [mm]	**67**
Links/m [pc.]	**15**
corresponds to [mm]	**1,005**
e-chain® length	$L_K = S/2 + K$

Available from stock

Upon request

Steel mounting brackets | Locking | Pivoting

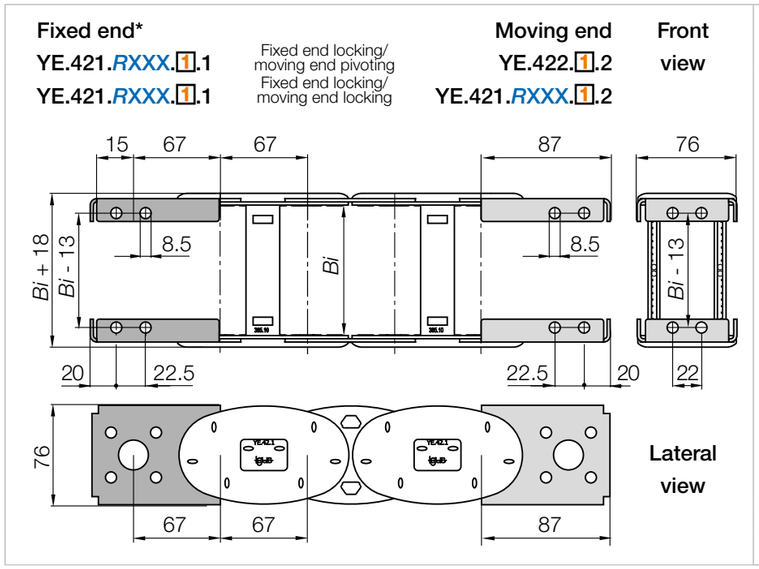

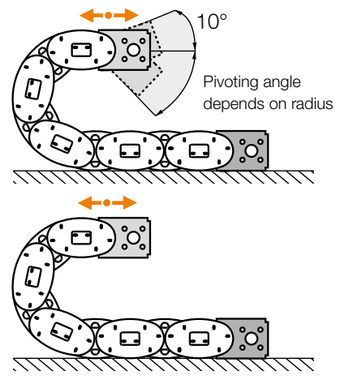

***Note:** The mounting bracket at the fixed point is **always a locking mounting bracket**. The mounting bracket on the moving end can be either pivoting or locking, depending on the application.

Moving end
Fixed end

Part No. Full set Moving end pivoting, fixed end* locking	Part No. Full set Moving end locking, fixed end* locking	Description Full set (both ends)
YE.422.*R*XXX.1.12.**A**	YE.421.*R*XXX.1.12.**A**	These e-chains® always start and end with outer links, pre-assembled.

Part No. Steel mounting brackets as individual parts		
Only fixed end*, locking	Only moving end, locking	Only moving end, pivoting
YE.421.*R*XXX.1.1.**A**	YE.421.*R*XXX.1.2.**A**	YE.422.1.2.**A**

Available from stock
Upon request

YE | Series YE.42 / YR.42

YE.42
YR.42

Steel mounting brackets | Locking | Pivoting

Note: The YE plastic-steel hybrid e-chains® can only be ordered with an odd number of links. This is because these e-chains® always end with outer links (odd number of links). The mounting brackets at the moving end and fixed end always form the end of the e-chain® and are inner links. **For odd number of links, please add index 1.**

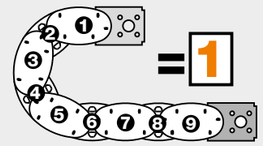

Order key

YE.422.*R*100.1.12 .A

Series	Index radius	Odd number of links	Full set	Pre-fitted

Note: Possible variations for pre-fitted YE steel mounting brackets.
Please add index **.A** to receive mounting brackets pre-fitted.

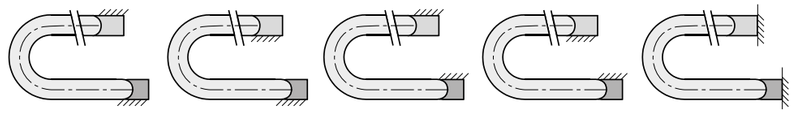

Complete Part No. with the required radius R.

Test - unsupported length FL_G with 5kg/m fill weight

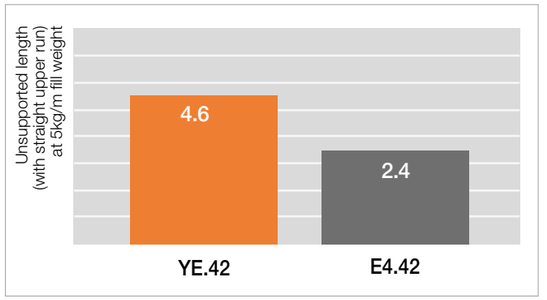

In a comparison test in its test laboratory, which is the largest in the industry, igus® compared the YE and E4.1 series with each other. The two systems were evaluated with regard to their unsupported length (with straight upper run) with a 5kg/m fill weight.

Result: With a fill weight of 5kg/m, the YE.42 series can travel up to 4.6m unsupported versus only 2.4m for the E4.42.

Available from stock
Upon request

Interior separation | Increase cable service life

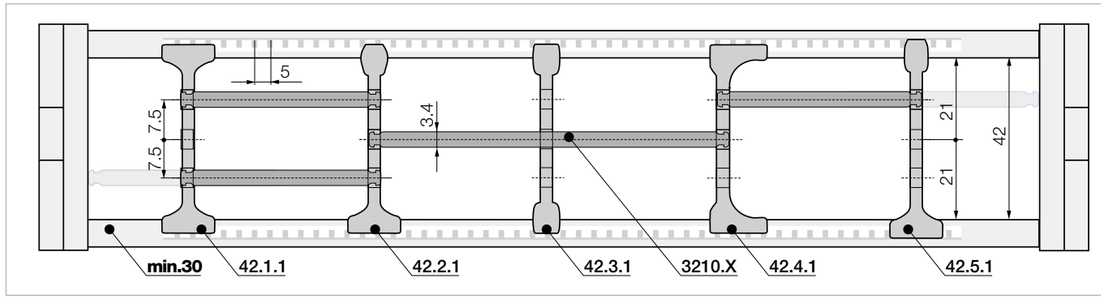

No lateral gap to side links necessary.
As standard separators are fitted every 2nd e-chain® link!



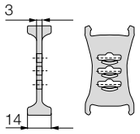

Part No.
Standard separator
unassembled **42.1**
assembled **42.1.1**

For all applications
Standard separator with a wide base for maximum holding force.



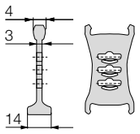

Part No.
Separator, narrow top
unassembled **42.2**
assembled **42.2.1**

For even faster installation
Wide on one side for high holding force, narrow on opposite side for easy cable fitting.



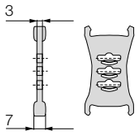

Part No.
Separator, narrow
unassembled **42.3**
assembled **42.3.1**

For a large number of thin cables
Separator with a narrow base for a large number of thin cables side by side. Saves space.



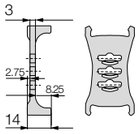

Part No.
Separator, asymmetrical
unassembled **42.4**
assembled **42.4.1**

For side-mounted applications
Asymmetrical separator, for defined gap distance. No additional spacers required.



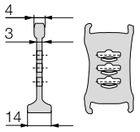

Part No.
Notch separator*
unassembled **42.5**
assembled **42.5.1**

Locks securely in preset increments
Notch separator* for exact positioning. Recommended for side-mounted applications. *Suitable from ***Bi*** 75

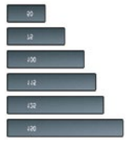

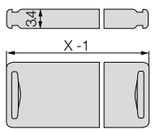

Part No.
Shelf
unassembled **3200.X**
assembled **3210.X**

Horizontal separation
Full-width shelf locks securely into separators at both ends, giving a fixed width. Can be used as full-width or modular shelving.

Width [mm]	Part No. unassembled	Part No. assembled
050	**3200.050**	**3210.050**
075	**3200.075**	**3210.075**
100	**3200.100**	**3210.100**
115	**3200.115**	**3210.115**
125	**3200.125**	**3210.125**
150	**3200.150**	**3210.150**
175	**3200.175**	**3210.175**
200	**3200.200**	**3210.200**
225	**3200.225**	**3210.225**
250	**3200.250**	**3210.250**

Interior separation | Other optional elements for higher holding force

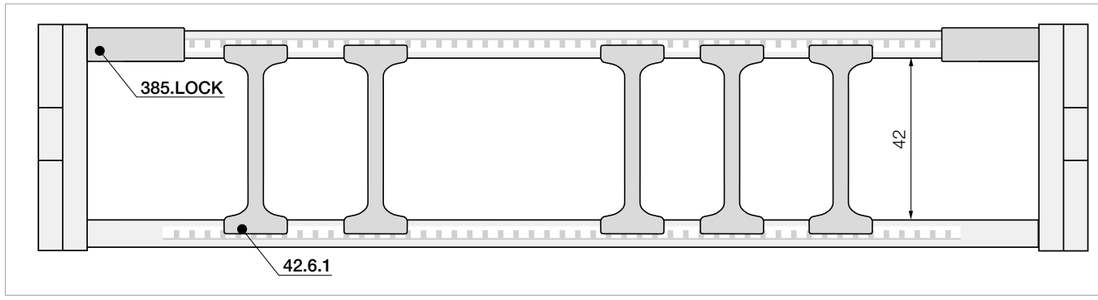

No lateral gap to side links necessary.
As standard separators are fitted every 2nd e-chain® link!



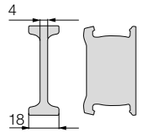

Part No.
Notch locking separator
unassembled **42.6**
assembled **42.6.1**

Notch locking separator for increased holding force
For higher crossbar opening forces for high humidity and/or large hydraulic hoses. They can be positioned precisely and then locked in position.



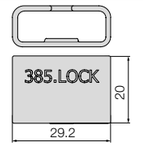

Part No.
Locking clip
unassembled **385.LOCK**

385.LOCK for increased opening force
For high humidity and/or large hydraulic hoses. They lock the crossbar.

YE.42 hybrid chains for retrofitting a Genie work platform



The YE.42 series with a chain length of 7.5m is used in a Genie work platform. Flawless function after installation. The engineers on site particularly emphasised the ease of installation. It took much longer to remove the existing steel chain than to install the new YE hybrid energy chain, which was done within an hour in this application.

Product range

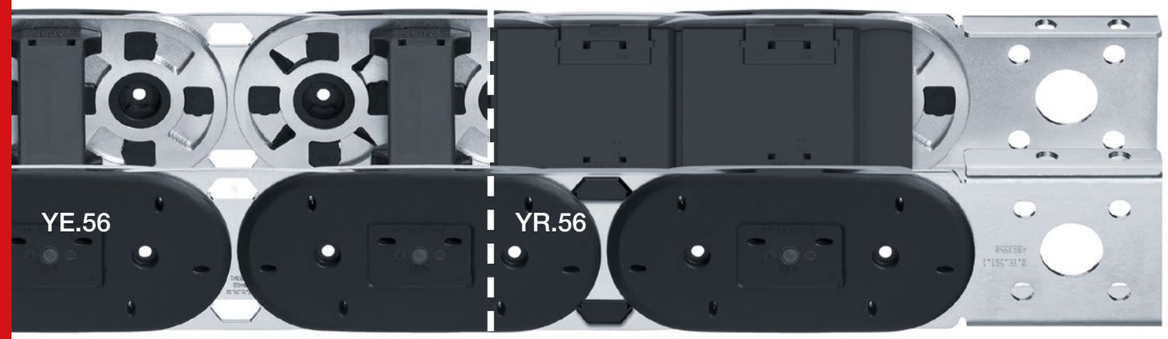

Part No. e-chains® with crossbars every 2nd link	Part No. e-tubes closed	*Bi* [mm]	*Ba* [mm]	YE.56 [kg/m]	YR.56 [kg/m]
YE.56. 05.□.0*	–	50	74	≈ 6.405	–
YE.56. 06.□.0*	–	65	89	≈ 6.455	–
YE.56. 07.□.0*	YR.56. 07.□.0 *1)	75	99	≈ 6.489	≈ 6.762
YE.56. 08.□.0*	–	87	111	≈ 6.530	–
YE.56. 10.□.0	**YR.56.10.□.0**	100	124	≈ 6.574	≈ 6.938
YE.56. 11.□.0	–	112	136	≈ 6.614	–
YE.56. 12.□.0	**YR.56.12.□.0**	125	149	≈ 6.658	≈ 7.113
YE.56. 13.□.0	–	137	161	≈ 6.698	–
YE.56. 15.□.0	**YR.56.15.□.0**	150	174	≈ 6.742	≈ 7.288
YE.56. 16.□.0	–	162	186	≈ 6.824	–
YE.56.169.□.0	–	170	194	≈ 6.853	–
YE.56. 17.□.0	**YR.56. 17.□.0**	175	199	≈ 6.871	≈ 7.463
YE.56.182.□.0	–	183	207	≈ 6.901	–
YE.56. 18.□.0	–	187	211	≈ 6.915	–
YE.56. 20.□.0	**YR.56.20.□.0**	200	224	≈ 6.962	≈ 7.639
YE.56.207.□.0	–	208	232	≈ 7.004	–
YE.56. 21.□.0	–	212	236	≈ 7.019	–
YE.56. 22.□.0	–	225	249	≈ 7.067	–
YE.56. 23.□.0	–	237	261	≈ 7.111	–
YE.56. 25.□.0	**YR.56.25.□.0**	250	274	≈ 7.159	≈ 7.989
YE.56. 26.□.0	–	262	286	≈ 7.203	–
YE.56. 27.□.0	**YR.56. 27.□.0**	275	299	≈ 7.251	≈ 8.165
YE.56. 28.□.0	–	287	311	≈ 7.296	–

Part No. e-chains® with crossbars every 2nd link	Part No. e-tubes closed	*Bi* [mm]	*Ba* [mm]	YE.56 [kg/m]	YR.56 [kg/m]
YE.56. 30.□.0	**YR.56.30.□.0**	300	324	≈ 7.344	≈ 8.340
YE.56. 31.□.0	–	312	336	≈ 7.388	–
YE.56. 32.□.0	–	325	349	≈ 7.436	–
YE.56. 33.□.0	–	337	361	≈ 7.480	–
YE.56. 35.□.0	**YR.56.35.□.0**	350	374	≈ 7.528	≈ 8.691
YE.56. 36.□.0	–	362	386	≈ 7.614	–
YE.56. 37.□.0	–	375	399	≈ 7.663	–
YE.56. 38.□.0	–	387	411	≈ 7.709	–
YE.56. 40.□.0	**YR.56.40.□.0**	400	424	≈ 7.759	≈ 9.041
YE.56. 41.□.0	–	412	436	≈ 7.804	–
YE.56. 42.□.0	–	425	449	≈ 7.854	–
YE.56. 43.□.0	–	437	461	≈ 7.899	–
YE.56. 45.□.0	–	450	474	≈ 7.949	–
YE.56. 46.□.0	**YR.56.46.□.0**	462	486	≈ 7.995	≈ 9.476
YE.56. 47.□.0	–	475	499	≈ 8.044	–
YE.56. 48.□.0	–	487	511	≈ 8.090	–
YE.56. 50.□.0	–	500	524	≈ 8.139	–
YE.56. 51.□.0	–	512	536	≈ 8.198	–
YE.56. 52.□.0	–	525	549	≈ 8.248	–
YE.56. 53.□.0	–	537	561	≈ 8.294	–
YE.56. 55.□.0	–	550	574	≈ 8.344	–
YE.56. 60.□.0	–	600	624	≈ 8.535	–

Available bend radii *R* [mm] | 100[2]| 125[2]| 150 | 200 | 250 | 300 | 350 | 400 | 500 |

*Widths under ***Bi* 100** available upon request. Here, an inspection and dimensioning by igus® engineering is required in advance.

1) Lid removable, non-openable.2) Radius not available for e-tubes.

Order key

YE.56.10.150.0

Series / Type	Inner height	Width index	Bend radius	Colour index

Order example:

Complete Part No. with the required radius □. Example:

YE.56.10.100.0 = crossbars removable along the inner and outer radius

YR.56.10.150.0 = lids openable along the outer radius from one side

Order index for colour options ▶ **www.igus.eu/info-colours**

Unsupported applications | Long unsupported lengths, ideal for inclined axes

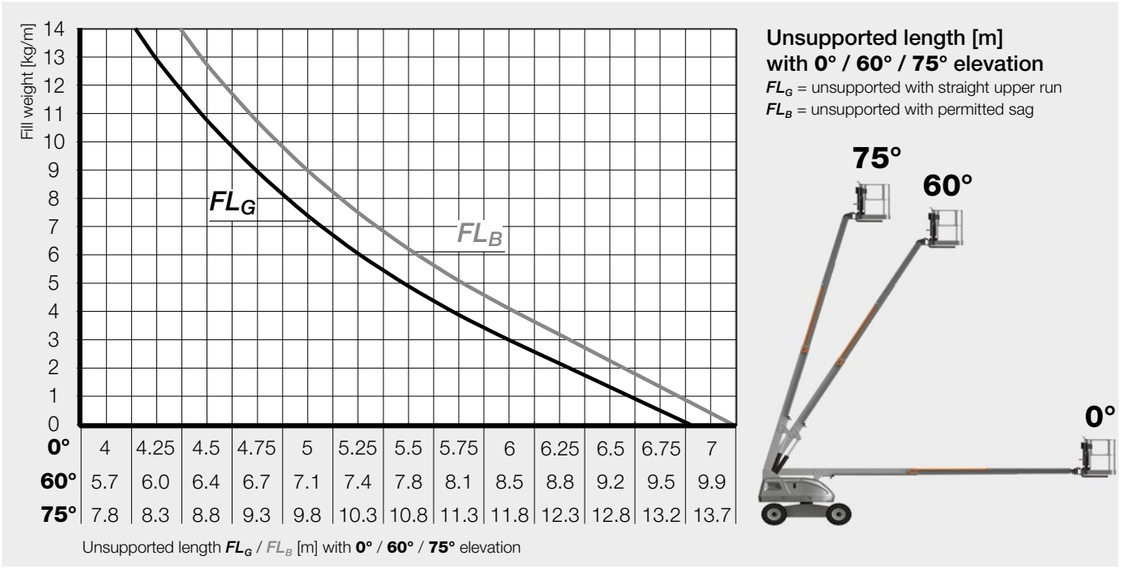

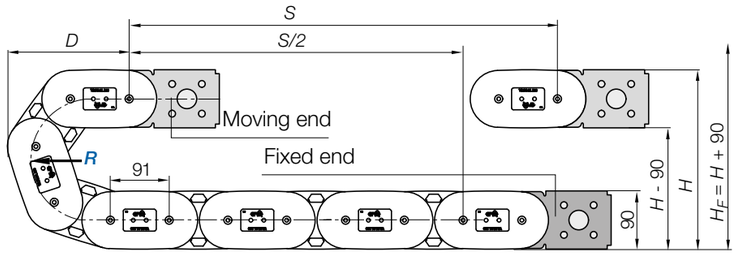

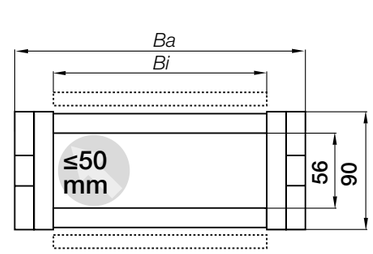

R	100[2]	125[2]	150	200	250	300	350	400	500
H	335	385	435	535	635	735	835	935	1,135
D	281.5	306.5	331.5	381.5	431.5	481.5	531.5	581.5	681.5
K	500	575	655	815	970	1,125	1,285	1,440	1.755

The required clearance height: $H_F = H + 90$mm (with 3.0kg/m fill weight)

2) Radius not available for e-tubes.

Inner height [mm]	**56**
Pitch [mm]	**91**
Links/m [pc.]	**11**
corresponds to [mm]	**1,001**
e-chain® length	$L_K = S/2 + K$

Available from stock

Upon request

Steel mounting brackets | Locking | Pivoting

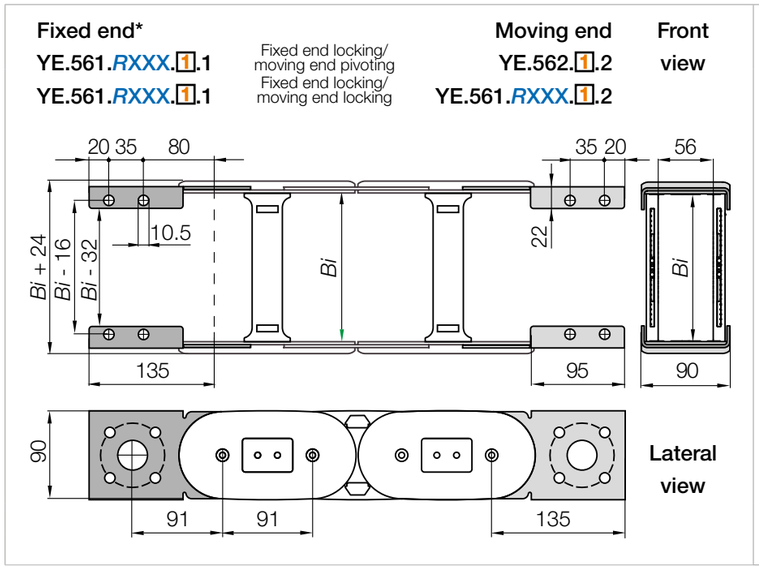

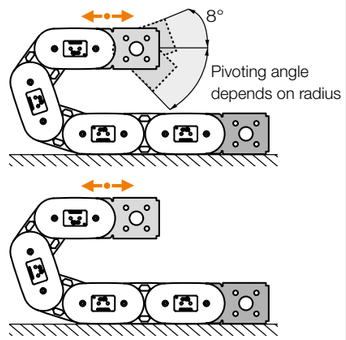

***Note:** The mounting bracket at the fixed point is **always a locking mounting bracket**. The mounting bracket on the moving end can be either pivoting or locking, depending on the application.

Moving end
Fixed end

Part No. Full set Moving end pivoting, fixed end* locking	Part No. Full set Moving end locking, fixed end* locking	Description Full set (both ends)
YE.562.RXXX.1.12.A	YE.561.RXXX.1.12.A	These e-chains® always start and end with outer links, pre-assembled.

Part No. Steel mounting brackets as individual parts		
Only fixed end*, locking	Only moving end, locking	Only moving end, pivoting
YE.561.RXXX.1.1.A	YE.561.RXXX.1.2.A	YE.562.1.2.A

Available from stock
Upon request

YE | Series YE.56 / YR.56

YE.56
YR.56

Steel mounting brackets | Locking | Pivoting

Note: The YE plastic-steel hybrid e-chains® can only be ordered with an odd number of links. This is because these e-chains® always end with outer links (odd number of links). The mounting brackets at the moving end and fixed end always form the end of the e-chain® and are inner links. **For odd number of links, please add index 1.**

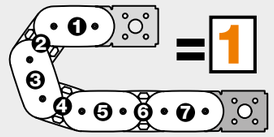

Order key

YE.562.R100.1.12.A

Series	Index radius	Odd number of links	Full set	Pre-fitted

Note: Possible variations for pre-fitted YE steel mounting brackets.
Please add index **.A** to receive mounting brackets pre-fitted.

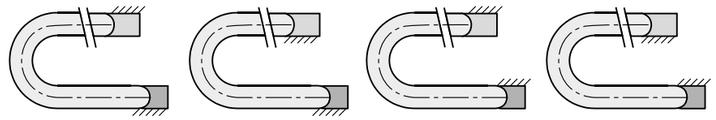

Complete Part No. with the required radius R.

Test - unsupported length FL_G with 5kg/m fill weight

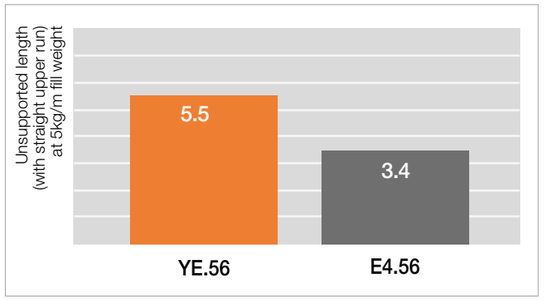

In a comparison test in its test laboratory, which is the largest in the industry, igus® compared the YE and E4.1 series with each other. The two systems were evaluated with regard to their unsupported length (with straight upper run) with a 5kg/m fill weight.

Result: With a fill weight of 5kg/m, the YE.56 series can travel up to 5.5m unsupported versus only 3.4m for the E4.56.

Available from stock
Upon request

Interior separation | Increase cable service life

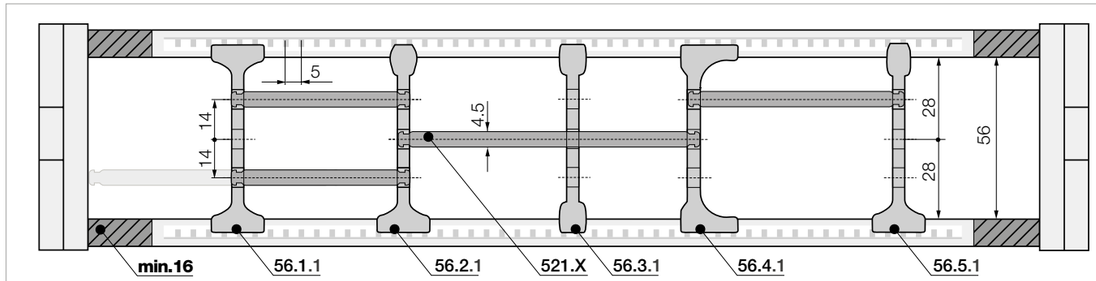

Note: Please be aware of the minimum lateral gap to the side links! **e-tube: 40mm** | **e-chain®: 16mm**
As standard separators are fitted every 2nd e-chain® link!



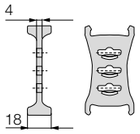

Part No.	
Standard separator	
unassembled	**56.1**
assembled	**56.1.1**

For all applications

Standard separator with a wide base for maximum holding force.



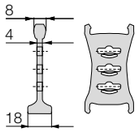

Part No.	
Separator, narrow top	
unassembled	**56.2**
assembled	**56.2.1**

For even faster installation

Wide on one side for high holding force, narrow on opposite side for easy cable fitting.



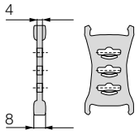

Part No.	
Separator, narrow	
unassembled	**56.3**
assembled	**56.3.1**

For a large number of thin cables

Separator with a narrow base for a large number of thin cables side by side. Saves space.



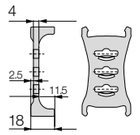

Part No.	
Separator, asymmetrical	
unassembled	**56.4**
assembled	**56.4.1**

For side-mounted applications

Asymmetrical separator, for defined gap distance. No additional spacers required.



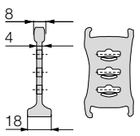

Part No.	
Notch separator	
unassembled	**56.5**
assembled	**56.5.1**

Locks securely in preset increments

Notch separator for exact positioning. Recommended for side-mounted applications.

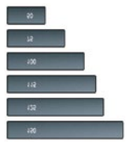

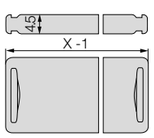

Part No.	
Shelf	
unassembled	**520.X**
assembled	**521.X**

Horizontal separation

Full-width shelf locks securely into separators at both ends, giving a fixed width. Can be used as full-width or modular shelving.

Width [mm]	Part No. unassembled	Part No. assembled
050	**520.050**	**521.050**
065	**520.065**	**521.065**
075	**520.075**	**521.075**
100	**520.100**	**521.100**
125	**520.125**	**521.125**
150	**520.150**	**521.150**
175	**520.175**	**521.175**
200	**520.200**	**521.200**
225	**520.225**	**521.225**
250	**520.250**	**521.250**
300	**520.300**	**521.300**
350	**520.350**	**521.350**
375	**520.375**	**521.375**
387	**520.387**	**521.387**
450	**520.450**	**521.450**

Interior separation | Other optional elements for higher holding force

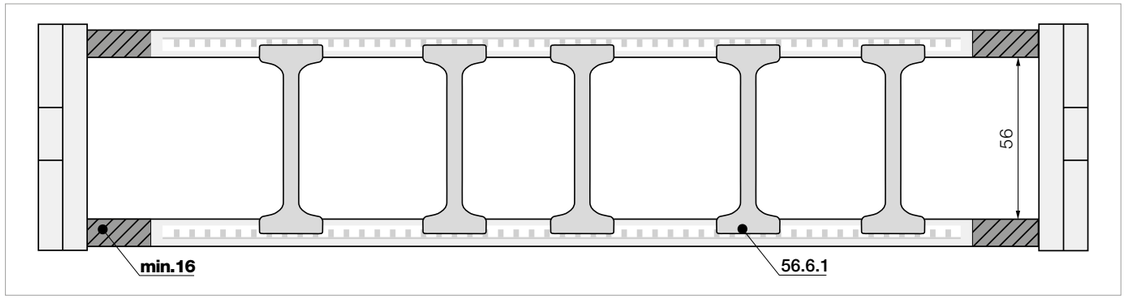

Note: Please be aware of the minimum lateral gap to the side links! **e-tube: 40mm** | **e-chain®: 16mm**
As standard separators are fitted every 2nd e-chain® link!



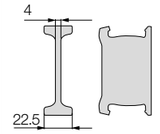

Part No.	
Notch locking separator*	
unassembled	**56.6**
assembled	**56.6.1**

Notch locking separator for increased holding force

For higher crossbar opening forces for high humidity and/or large hydraulic hoses. They can be positioned precisely and then locked in position.

The Chinese company LGMG builds vehicles with telescopic work platforms



Installing street lighting, repairing ships, taking photos: the Chinese company LGMG builds vehicles with telescopic work platforms for these purposes. For the guidance of power and data cables, the company uses hybrid e-chains® (YE.42.10.100.0) and chainflex® cables from igus® over a travel of around 40 metres. As the hybrid chains are made of steel and high-performance plastic, they were able to reduce the weight of the telescopic arm. The solution also optimised the straightness and torsional strength of the cable guidance.

YEHD | Series YEHD.112 / YEHD.108 / YRHD.108

Product range

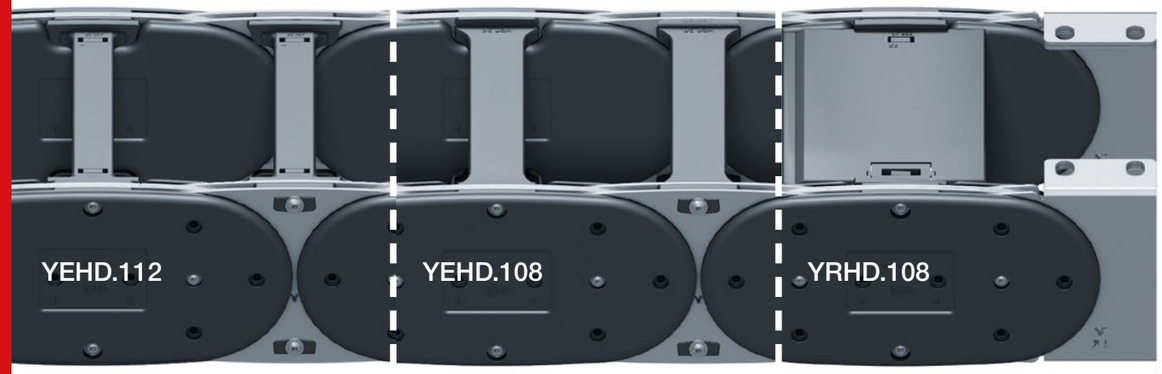

Part No. e-chains® with crossbars every link	Part No. e-tubes closed		Bi [mm]	Ba [mm]	E4.112 [kg/m]	R4.112 [kg/m]
YEHD.112.	YRHD.112.	20.□.0	200	248	≈ 21.724	≈ 23.492
YEHD.112.	–	207.□.0	207	255	≈ 21.780	–
YEHD.112.	–	21.□.0	212	260	≈ 21.797	–
YEHD.112.	–	22.□.0	225	273	≈ 21.858	–
YEHD.112.	–	23.□.0	237	285	≈ 21.914	–
YEHD.112.	YRHD.112.	25.□.0	250	298	≈ 21.976	≈ 24.165
YEHD.112.	–	26.□.0	262	310	≈ 22.032	–
YEHD.112.	–	27.□.0	275	323	≈ 22.093	–
YEHD.112.	–	28.□.0	287	335	≈ 22.150	–
YEHD.112.	YRHD.112.	30.□.0	300	348	≈ 22.211	≈ 24.838
YEHD.112.	–	31.□.0	312	360	≈ 22.267	–
YEHD.112.	–	32.□.0	325	373	≈ 22.328	–
YEHD.112.	–	33.□.0	337	385	≈ 22.385	–
YEHD.112.	YRHD.112.	35.□.0	350	398	≈ 22.446	≈ 25.505
YEHD.112.	–	36.□.0	362	410	≈ 22.553	–
YEHD.112.	–	37.□.0	375	423	≈ 22.616	–
YEHD.112.	–	38.□.0	387	435	≈ 22.674	–

Part No. e-chains® with crossbars every link	Part No. e-tubes closed		Bi [mm]	Ba [mm]	E4.112 [kg/m]	R4.112 [kg/m]
YEHD.108.		387.□.0*	387	435	≈ 23.265	–
YEHD.112.	YRHD.112.	40.□.0	400	448	≈ 22.737	≈ 26.190
YEHD.112.	–	41.□.0	412	460	≈ 22.795	–
YEHD.112.	–	42.□.0	425	473	≈ 22.858	–
YEHD.112.	–	43.□.0	437	485	≈ 22.916	–
YEHD.112.	–	45.□.0	450	498	≈ 22.979	–
YEHD.112.	–	46.□.0	462	510	≈ 23.037	–
YEHD.112.	–	47.□.0	475	523	≈ 23.100	–
YEHD.112.	–	48.□.0	487	535	≈ 23.159	–
YEHD.112.	YRHD.112.	50.□.0	500	548	≈ 23.222	≈ 27.394
YEHD.112.	–	51.□.0	512	560	≈ 23.296	–
YEHD.112.	–	52.□.0	525	573	≈ 23.360	–
YEHD.112.	–	53.□.0	537	585	≈ 23.418	–
YEHD.112.	–	55.□.0	550	598	≈ 23.482	–
YEHD.108.		550.□.0*	550	598	≈ 24.322	–
YEHD.112.	–	60.□.0	600	648	≈ 23.726	–

Available bend radii *R* [mm] | 250 | 325 | 400 | 500 | 600 |

Note: *YEHD.108 series heavy-duty version with reinforced, bolted crossbars for higher loads, **Part No. YEHD.108.387.□.0 and YEHD.108.550.□.0.**

Order key

YE.112.20.400.0

Series / Type | Inner height | Width index | Bend radius | Colour index

Order example:
Complete Part No. with the required radius *R*. Example:
YEHD.112.20.400.0 = crossbars removable along the inner and outer radius
YEHD.108.387.400.0 = reinforced, bolted crossbars, removable
YRHD.108.20.400.0 = lids openable along the outer radius from one side
Order index for colour options ▶ **www.igus.eu/info-colours**

Available from stock
Upon request

YEHD.112
YEHD.108
YRHD.108

YEHD | Series YEHD.112 / YEHD.108 / YRHD.108

Unsupported applications | Long unsupported lengths, ideal for inclined axes

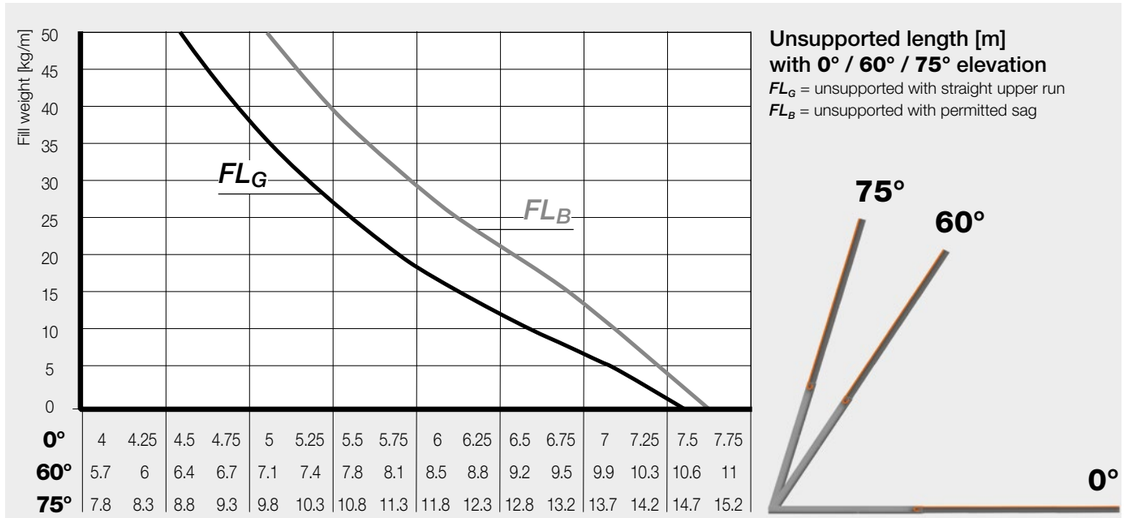

0°	4	4.25	4.5	4.75	5	5.25	5.5	5.75	6	6.25	6.5	6.75	7	7.25	7.5	7.75
60°	5.7	6	6.4	6.7	7.1	7.4	7.8	8.1	8.5	8.8	9.2	9.5	9.9	10.3	10.6	11
75°	7.8	8.3	8.8	9.3	9.8	10.3	10.8	11.3	11.8	12.3	12.8	13.2	13.7	14.2	14.7	15.2

Unsupported length ***FL_G*** / ***FL_B*** [m] with **0°** / **60°** / **75°** elevation

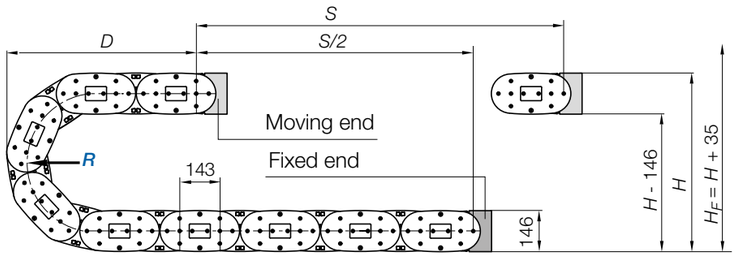

R	250	325	400	500	600
H	670	820	970	1,170	1,370
D	540	615	690	790	890
K	1,075	1.310	1,545	1,860	2,175

The required clearance height: $H_F = H + 35$mm (with 10kg/m fill weight)

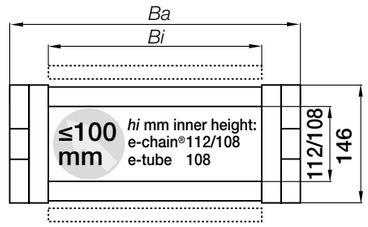

YEHD.112 e-chain® inner height [mm]	**112**
YEHD.108 e-chain® inner height [mm]	**108**
YERD.108 e-tube inner height [mm]	**108**
Pitch [mm]	**143**
Links/m [pc.]	**7**
corresponds to [mm]	**1,001**
e-chain® length	$L_K = S/2 + K$

Test - unsupported length FL_G with 5kg/m fill weight

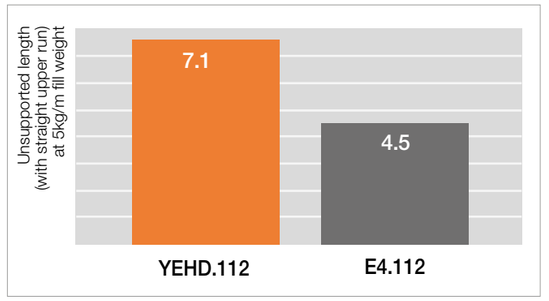

In a comparison test in its test laboratory, which is the largest in the industry, igus® compared the YEHD and E4.1 series with each other. The two systems were evaluated with regard to their unsupported length (with straight upper run) with a 5kg/m fill weight.

Result: With a fill weight of 5kg/m, the YEHD.112 series can travel up to 7.1m unsupported vesus only 3.4m for the E4.112.

Steel mounting brackets | Locking | Pivoting

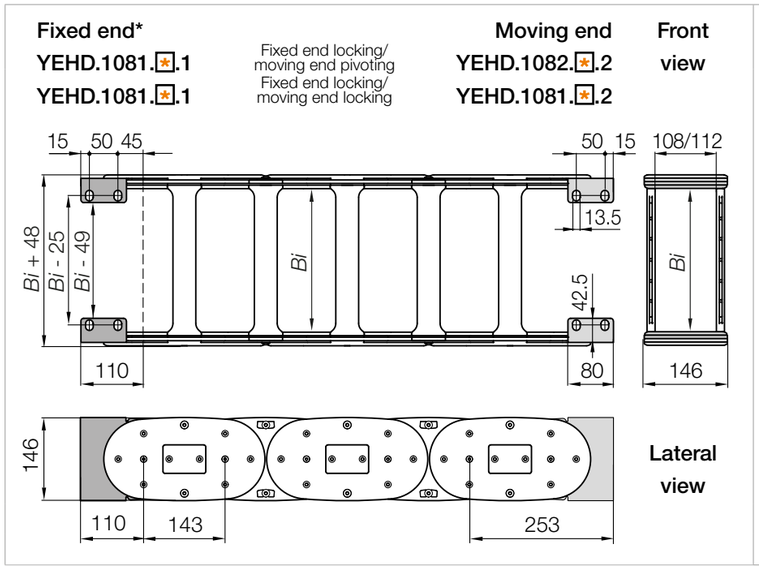

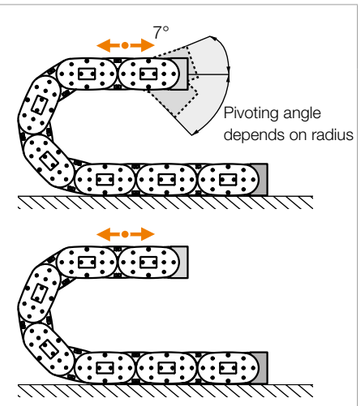

***Note:** The mounting bracket at the fixed point is **always a locking mounting bracket**. The mounting bracket on the moving end can be either pivoting or locking, depending on the application.

Moving end
Fixed end

Part No. Full set	Part No. Full set
Moving end pivoting, fixed end* locking	Moving end locking, fixed end* locking
YEHD.1082.*.12.**A**	YEHD.1081.*.12.**A**

Part No. Steel mounting brackets as individual parts		
Only fixed end*, locking	Only moving end, locking	Only moving end, pivoting
YEHD.1081.*.1.**A**	YEHD.1081.*.2.**A**	YEHD.1082.*.2.**A**

Note*: The e-chains® may end with either an inner or an outer side link. An outer side link should always be the first e-chain® link at the moving end. Please specify the index 1 (for odd) or 2 (for even) depending on an even or odd number of links required.

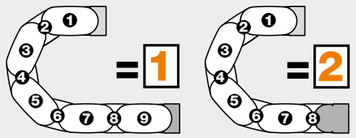

Order key

YEHD.1081.1.12.A

Series	Moving end locking / Fixed end* locking	Odd number of links	Full set	Pre-fitted

Note: Possible variations for pre-fitted YE steel mounting brackets. Please add index **.A** to receive mounting brackets pre-fitted.

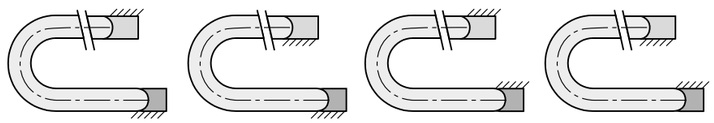

Interior separation | Increase cable service life

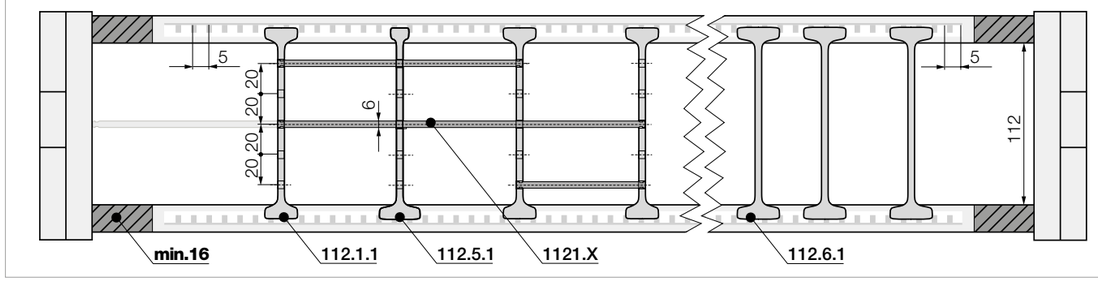

Note: Please be aware of the minimum lateral gap to the side links! **e-chain®: =16mm**
As standard separators are fitted every 2nd e-chain® link!

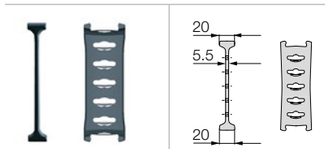

Part No. Standard separator	
unassembled	**112.1**
assembled	**112.1.1**

For all applications

Standard separator with a wide base for maximum holding force.

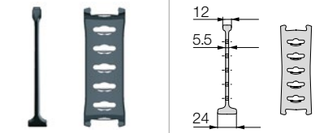

Part No. Notch separator	
unassembled	**112.5**
assembled	**112.5.1**

Locks securely in preset increments

Notch separator for exact positioning. Recommended for side-mounted applications.

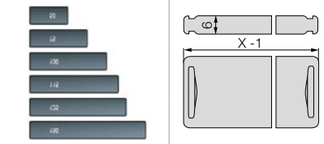

Part No. Shelf	
unassembled	**1120.X**
assembled	**1121.X**

Horizontal separation

Full-width shelf locks securely into separators at both ends, giving a fixed width. Can be used as full-width or modular shelving.

Width [mm]	Part No. unassembled	Part No. assembled
050	**1120.050**	**1121.050**
065	**1120.065**	**1121.065**
075	**1120.075**	**1121.075**
100	**1120.100**	**1121.100**
125	**1120.125**	**1121.125**
150	**1120.150**	**1121.150**
175	**1120.175**	**1121.175**
200	**1120.200**	**1121.200**
225	**1120.225**	**1121.225**
250	**1120.250**	**1121.250**
300	**1120.300**	**1121.300**
350	**1120.350**	**1121.350**
375	**1120.375**	**1121.375**
387	**1120.387**	**1121.387**
450	**1120.450**	**1121.450**

Interior separation | Other optional elements

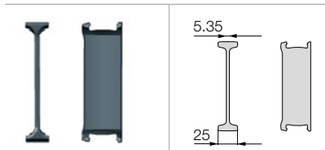

Part No. Notch locking separator	
unassembled	**112.6**
assembled	**112.6.1**

Notch locking separator for increased holding force

For higher crossbar opening forces for high humidity and/or large hydraulic hoses. They can be positioned precisely and then locked in position.

Available from stock
Upon request

YEHD | Series YEHD.108 / YRHD.108

Interior separation | Increase cable service life

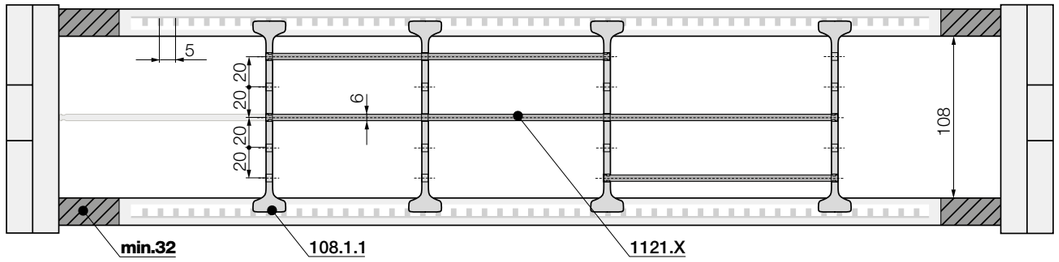

Note: Please be aware of the minimum lateral gap to the side links! **e-tubes: 32mm**
As standard separators are fitted every 2nd e-chain® link!



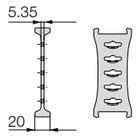

Part No.	
Standard separator	
unassembled	**108.1**
assembled	**108.1.1**

For all applications

Standard separator with a wide base for maximum holding force.

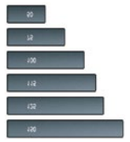

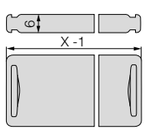

Part No.	
Shelf	
unassembled	**1120.X**
assembled	**1121.X**

Horizontal separation

Full-width shelf locks securely into separators at both ends, giving a fixed width. Can be used as full-width or modular shelving.

Width [mm]	Part No. unassembled	Part No. assembled
050	**1120.050**	**1121.050**
065	**1120.065**	**1121.065**
075	**1120.075**	**1121.075**
100	**1120.100**	**1121.100**

Width [mm]	Part No. unassembled	Part No. assembled
125	**1120.125**	**1121.125**
150	**1120.150**	**1121.150**
175	**1120.175**	**1121.175**
200	**1120.200**	**1121.200**

Width [mm]	Part No. unassembled	Part No. assembled
225	**1120.225**	**1121.225**
250	**1120.250**	**1121.250**
300	**1120.300**	**1121.300**
350	**1120.350**	**1121.350**

Width [mm]	Part No. unassembled	Part No. assembled
375	**1120.375**	**1121.375**
387	**1120.387**	**1121.387**
450	**1120.450**	**1121.450**

Available from stock
Upon request

YEHD | Application example

Hybrid tube YRHD used at DWK Drahtwerk Köln as a replacement for steel tube



High strength and high fill weight - both requirements of the DKW Drahtwerk Köln have led to the selection of the hybrid chain YRHD.108.25.500.0 (e-tube variant) in order to implement the unsupported travel length of 12.5m with a fill weight of 28kg/m. The lid and shelves of the energy tube can be opened so that it is possible to add or replace cables later.

Available from stock
Upon request

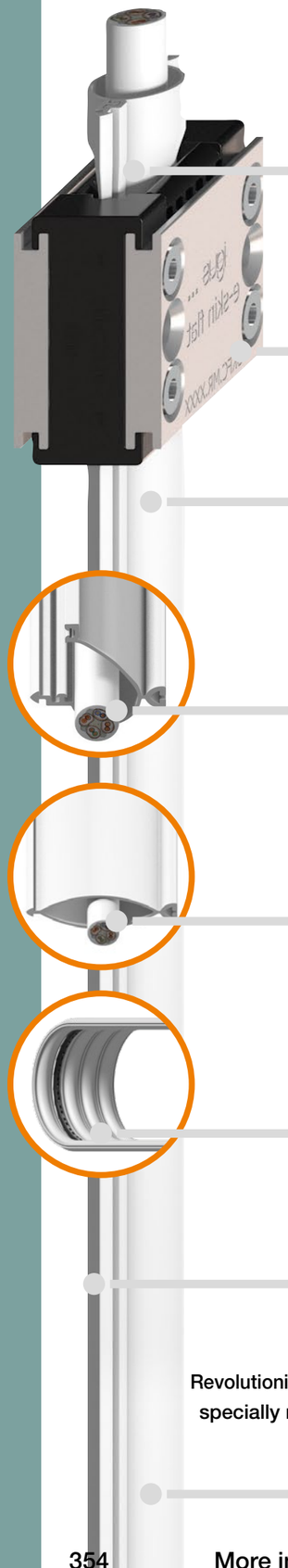

IPA cleanroom Class 1 for e-skin® flat profiles: virtually no wear or abrasion

Mounting brackets: stackable, variable width and with integrated strain relief - also for single profiles

Modular structure: extendable by connecting additional profiles

SKF.O openable: replace cables quickly with a special locking mechanism

SKF.C fully enclosed: prevent particle ingress with closed cable chambers version

Optional support e-chain®: SKF.S series for unsupported length and a defined bend radius

Flexible: can be shortened or widened

Revolutionise efficiency of the entire plant: specially matched chainflex® CFCLEAN braided structure.
More information ▶ Page 360

Connectable e-skin® flat profiles - SKF

The cable guides for automation systems and robots in the manufacture of displays, semiconductors, and microelectronic components have to meet special particle-free requirements. In contrast to commercially available solutions using fixed flat ribbon cables where cables are firmly fixed, the e-skin® flat energy supply system offers an openable chamber design that can be individually adjusted. Flexible braided cable elements (with or without connectors), e-skin® flat with support chains, hoses and so on, can now be changed or added in a few minutes.

Benefits

- Available in 2 versions: closed and openable with a special closure system
- Modular and compact design
- Optional with support e-chain® for longer unsupported lengths
- Multi-layer model possible
- Flexible, standard modular system, no special production, short delivery times
- Saving resources, as only individual elements are replaced in case of damage
- Replaces customer-specific flat ribbon cable
- chainflex® CFCLEAN cable offers high reliability thanks to its balanced braided structure

Typical application areas

- Cleanroom applications with compact installation spaces
- Short travels
- Display and semiconductor production
- LCD/LED panel production

Selection table

Series Flat profiles	Inner height *hi* [mm]	Outer height *ha* [mm]	Number of clamps per layer	Cable ≤ ø [mm]	Page
SKF.C - e-skin® flat, with closed cable chambers					
SKF10C	10	11	1 - 6	8	**356**
SKF12C*	12	13	1 - 6	10	**356**
SKF15C*	15	16	1 - 6	13	**356**
SKF.O - e-skin® flat, openable with a special locking mechanism					
SKF10O.	10	11	1 - 6	8	**356**
SKF12O	12	13	1 - 6	10	**356**
SKF15O	15	16	1 - 6	13	**356**

Series Support e-chain®	Width [mm]	Height [mm]	Bend radius *R* [mm]	Pitch [mm]	Page
SKF.S - support e-chain® for unsupported length and a defined bend radius					
SKF.S.08	8	8	040 -100	18 -25	**357**
SKF.S.10	10	10	125	30	**357**

* Support e-chain® optional.

Technical data

General properties	
Energy supply system, igumer SKF material - permitted temperature °C	+10°C up to +50°C
Mounting bracket, aluminium - permitted temperature °C	+10°C up to +50°C
Flammability class	UL94-HB

Proof IPA classification

IPA classification - report IG 2102-1212 for SKF, one layer with support chain
IPA classification - report IG 2107-1242 for SKF, three layers with support chain

Test parameters		Result
v_1 = 0.5m/s	a_1 = 1.0m/s²	Cleanroom class 1
v_2 = 1.0m/s	a_2 = 2.0m/s²	Cleanroom class 1
v_3 = 2.0m/s	a_3 = 4.0m/s²	Cleanroom class 1
Overall result		**ISO Class 1**

Fraunhofer IPA TESTED® DEVICE igus GmbH e-skin flat system Report No. IG 2102-1212

Fraunhofer IPA TESTED® DEVICE igus GmbH e-skin flat 3 layers Report No. IG 2107-1242

Note: This type of system should be designed in conjunction with our engineering team.
All information about these series is for guidance only - cleanroom solutions of this type should be designed in conjunction with igus® ▶ **www.igus.eu/contact**

e-skin® flat profiles | Series SKF.C / SKF.O

Product range

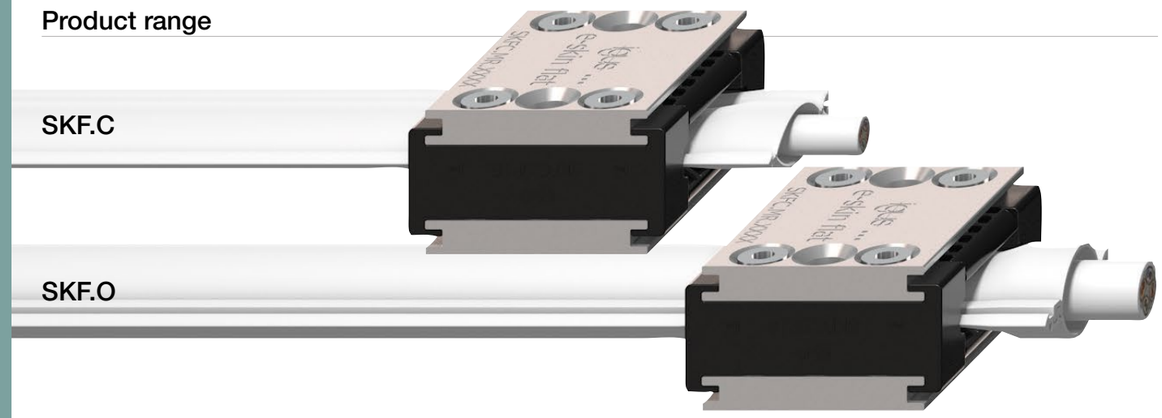

Part No.	Inner height *hi* [mm]	Outer height *ha* [mm]	Number of chambers	Cable ≤ ø [mm]	Weight [kg/m]
SKF.C fully enclosed, can be combined with support e-chain®					
SKF10C.1.1.10	10	11	2 - 6	8	≈ 0.032
SKF12C.1.1.10*	12	13	2 - 6	10	≈ 0.036
SKF15C.1.1.10*	15	16	2 - 6	13	≈ 0.042
SKF.O openable, with a special locking mechanism					
SKF10O.1.1.10	10	11	2 - 6	8	≈ 0.043
SKF12O.1.1.10	12	13	2 - 6	10	≈ 0.046
SKF15O.1.1.10	15	16	2 - 6	13	≈ 0.055

*Support e-chain® for unsupported length and an optionally available, defined bend radius ► please see next page.

Note: This type of system should be designed in conjunction with our engineering team.

Installation dimensions

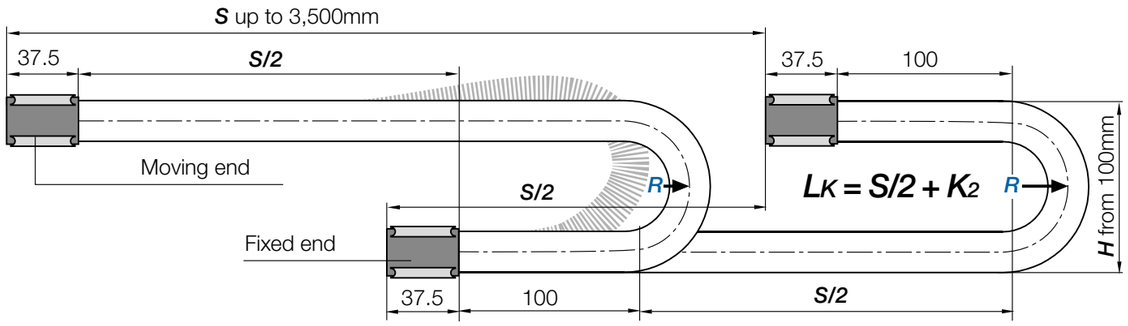

Note: The nominal clearance height = ***H*** and the allowance for the bend radius = ***K*** in the calculation of the energy supply length depend on the largest bend radius of the routed cables and their stiffness.

The following generally applies: $H = 2 \times R$ (largest bend radius of fitted cables) and or the used support chain $K = \pi \times R$ (largest bend radius of fitted cables) **+ 2 x 100mm + 2 x 37.5mm**.

Note: This type of system should be designed in conjunction with our engineering team.
All information about these series is for guidance only - cleanroom solutions of this type should be designed in conjunction with igus® ► **www.igus.eu/contact**

e-skin® flat profiles | Series SKF.S

Product range SKF.S | Support e-chain®



Part No.	Height [mm]	*R* [mm]	Pitch [mm]	Max. travel [m]*	Weight [kg/m]	For e-skin® SKF.C series
Support e-chain® SKF.S.08 for e-skin® SKF12C						
SKF.S.08.040.01.0	8	040	18	1.4	≈ 0.073	**SKF12C.1.1.10**
SKF.S.08.070.01.0	8	070	25	2.6	≈ 0.073	**SKF12C.1.1.10**
SKF.S.08.100.01.0	8	100	25	3.0	≈ 0.073	**SKF12C.1.1.10**
Support e-chain® SKF.S.10 for e-skin® SKF15C						
SKF.S.10.125.01.0	10	125	30	3.5	≈ 0.165	**SKF15C.1.1.10**

*Depending on the load, can only be realised with several e-skin® flat with support chains.

Note: This type of system should be designed in conjunction with our engineering team.

e-skin® flat variants | Openable, closed and closed with support e-chain®

The e-skin® flat profiles consist of individually connectable cable chambers. One or more cables can be put into these chambers. Here at least 2 chambers must be connected with each other. One chamber is closed or opened at a time and extended with further chambers until the required width is reached. For the closed single profiles SKF12C and SKF15C, a support chain is available, which equips the e-skin® flat with an unsupported length and the defined radius.

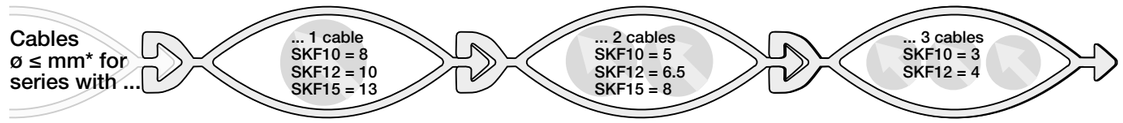

SKF.C fully enclosed. *Max. cable diameter depending on the number of cables fitted.

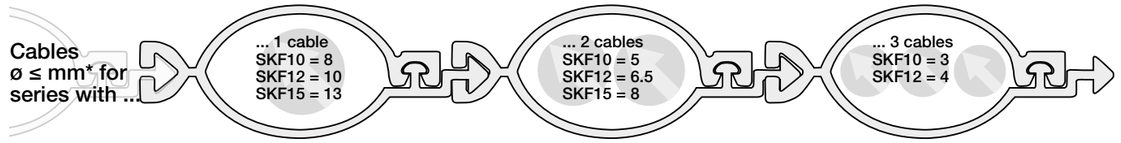

SKF.O openable. *Max. cable diameter depending on the number of cables fitted.

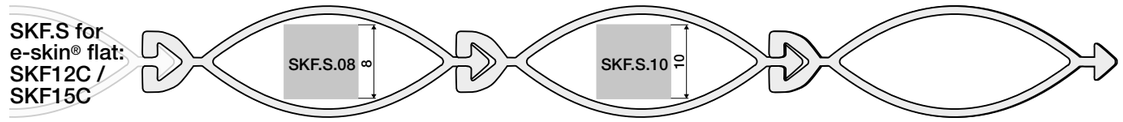

SKF.S support e-chain® (only in combination with SKF.C)

Aluminium mounting brackets | Stackable

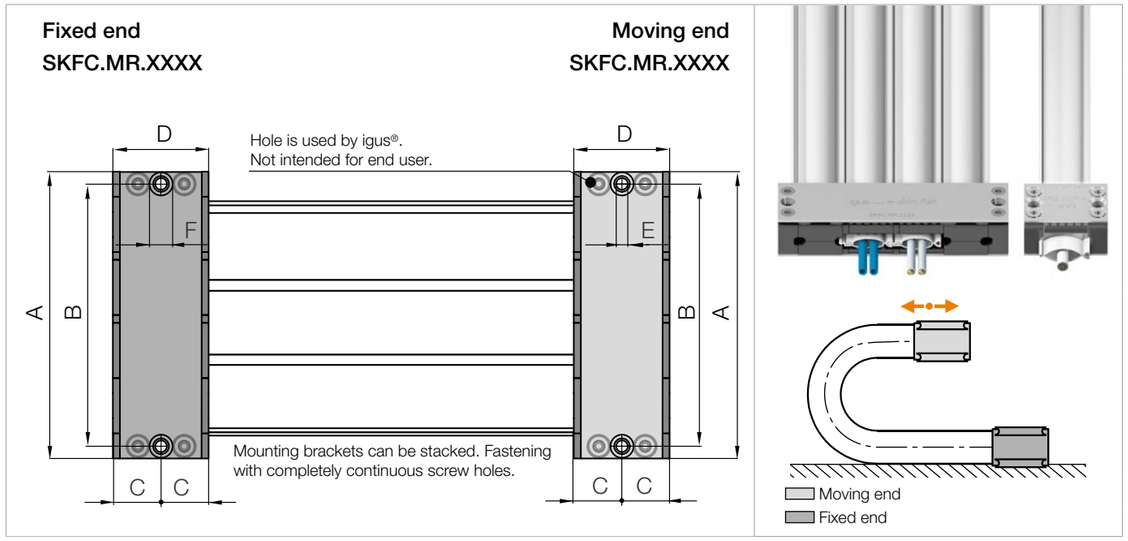

KMA	A	B	C	D	E ø	F ø	G ø
without tiewrap plates	[mm]	[mm]	[mm]	[mm]	[mm]	[mm]	[mm]
SKFC.MR.XXXX*	41 - 166.5	31.5 - 157	18.75	37.5	4.5	9	7

*Available for single and connected profiles of the e-skin® flat system.

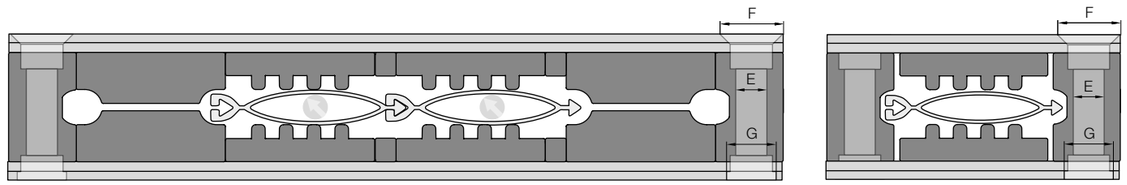

Schematic representation of the mounting brackets - variable width for connected and single profiles.

Note: This type of system should be designed in conjunction with our engineering team.
All information about these series is for guidance only - cleanroom solutions of this type should be designed in conjunction with igus® ▶ **www.igus.eu/contact**

Available from stock
Upon request

Aluminium mounting brackets design principle

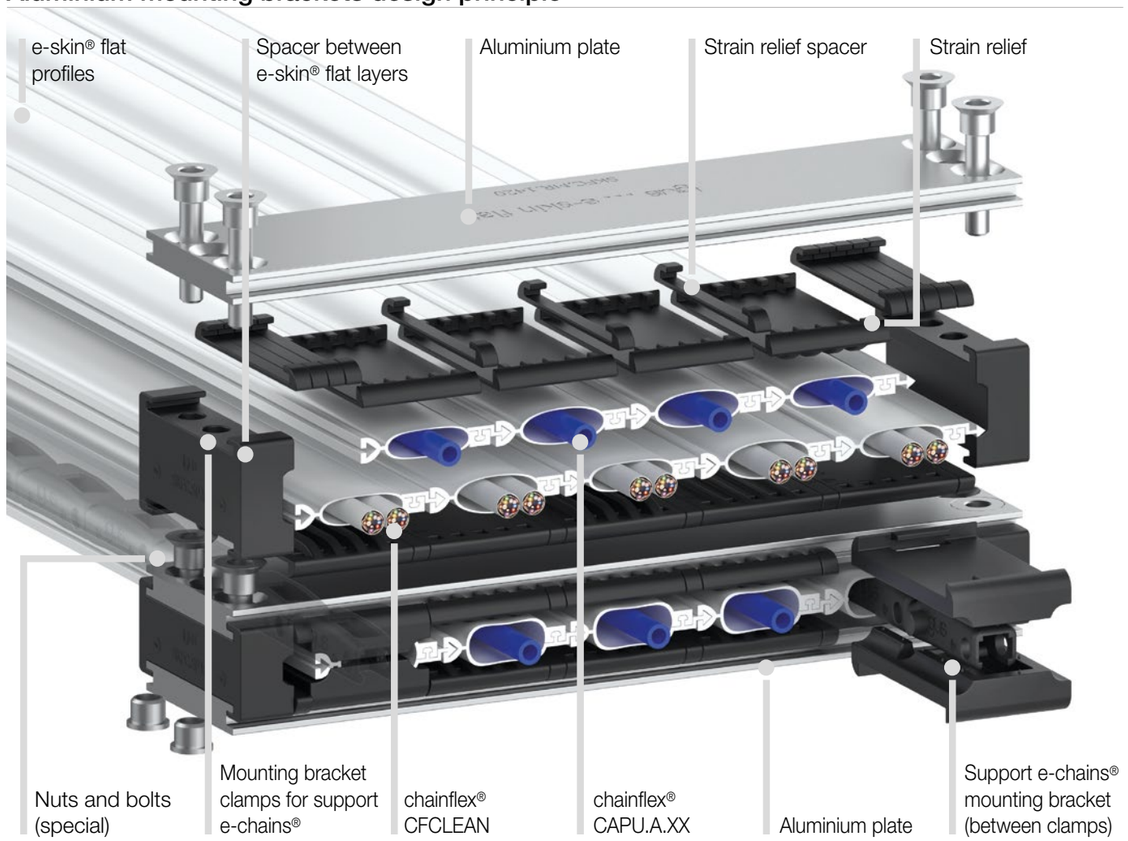

e-skin® flat profiles | Application example - in VPG systems



The e-skin® flat ribbon cable convinced Heidelberg Instruments and is used in Volume Pattern Generator systems (VPG). This compact system allows very small bend radii and is resistant to wear and abrasion during movement so that it can be used in cleanrooms - even in multiple layers, as tests by Fraunhofer IPA confirm.

e-skin® flat with CFCLEAN | Advantages



Almost no wear and abrasion:
IPA cleanroom Class 1

Low restoring forces: due to highly flexible stranded structures

Thinner:
approx. 16% smaller diameter[1)]
by dispensing with outer jacket

Lighter:
up to 21% weight reduction[1)]

Easy and time-saving maintenance:
Change a cable in a few seconds, even with readily harnessed connectors

Cost-effective:
no new ribbon cable required, if a new cable is to be added

Sustainable:
no waste in case of replacement, as the entire system does not need to be replaced

No bending of the system due to stiff jacket cables

1) Compared to commercially available jacketed cables

Powerful combination for your cleanroom - e-skin® flat with chainflex® CFCLEAN

The CFCLEAN product family has been specially developed and tested for use in e-skin® flat.The following goals were pursued during development: Very high flexibility with low restoring forces of maximum weight and diameter reduction. The high degree of flexibility was achieved by particularly fine stranded special conductors in a particularly soft and bend-resistant design.The low restoring forces with weight reduction were realised by dispensing with an outer jacket, the shielded stranded structures being guided by low-adhesion, particularly abrasion-resistant and highly banding based on PTFE with very high flexural strength. From stock, available from 1m.

- Up to 4-year guarantee: for 40 million double strokes with 70mm-bend radius
- Certified for use in cleanrooms
- With UL AWM certification
- All standard core/cross section combinations available

Typical application areas

● Flat Panel Display (FPD) industry ● Semiconductor production ● Production of OLEDs ● Medical technology ● Microelectronics industry

CFCLEAN | Overview

chainflex® cable	Bend radius [factor x d]	Temperature from/to [°C]	Approvals and standards	v max. [m/s] unsupported	a max.
Control elements					
CFCLEAN1	70	-10/+80		2	40
Coax elements					
CFCLEAN2	70	-10/+80		2	40
Data elements					
CFCLEAN3	70	-10/+80		2	40
Measuring system elements					
CFCLEAN4	70	-10/+80		2	40
Motor elements					
CFCLEAN7	70	-10/+80		2	40
Bus elements					
CFCLEAN8	70	-10/+80		2	40

Note: chainflex® CFCLEAN are not cables in the sense of the standards for wires and cables.Due to the absence of the outer jacket in CFCLEAN, which provides mechanical protection for cables, the use of chainflex® CFCLEAN is only permitted in e-skin® flat.

Proof IPA classification

IPA Classification - report IG 2107-1242, material/braided structure CFCLEAN3.01.05.02 and CAPU.A.06.0

Test parameters		Result
v_1 = 0.5m/s	a_1 = 1.0m/s²	Cleanroom class 1
v_2 = 1.0m/s	a_2 = 2.0m/s²	Cleanroom class 1
v_3 = 2.0m/s	a_3 = 4.0m/s²	Cleanroom class 1
Overall result		**ISO Class 1**

Fraunhofer IPA TESTED® DEVICE igus GmbH e-skin flat 3 layers Report No. IG 2107-1242

Guarantee igus chainflex 4 YEARS up to 4 years guarantee

igus 4-year chainflex cable guarantee and service life calculator based on 2 billion test cycles per year

chainflex® guarantee - as these types are solutions for special applications, please contact us directly for information on the guaranteed service life ▶ **info@igus.de**

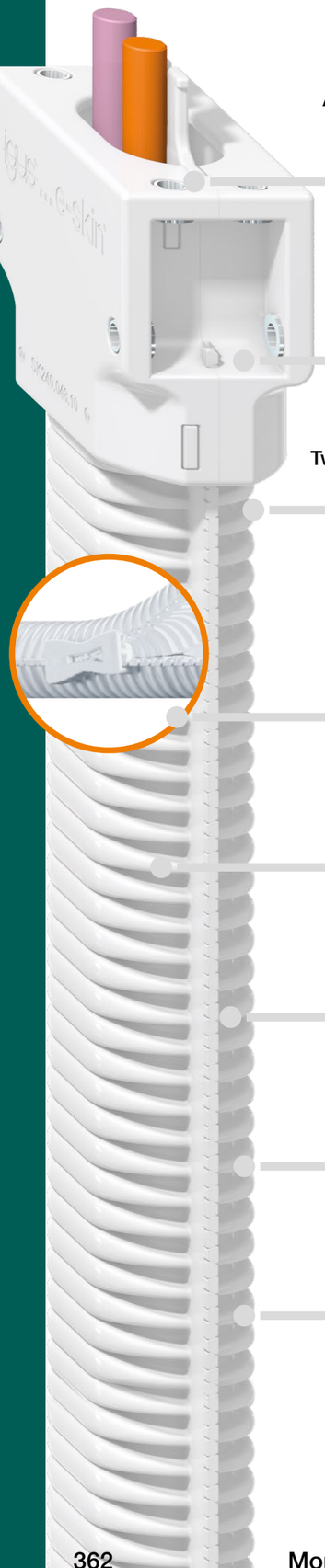

Attachment from any side: KMA mounting brackets with strain relief

IPA cleanroom Class 1 for e-skin® corrugated tube: virtually no wear or abrasion

Two-piece corrugated tube: upper and lower shell

Reclosable opening mechanism: easy opening and closing with "zipper" function

Space-saving: less installation space required

Cable-friendly: with defined minimum bend radius

Oval geometry: prevents unintentional sideways movement

Fully enclosed: protection against dust and water ingress

Cleanroom corrugated tube energy supply system - e-skin® SK, SKS

To keep cleanrooms particle-free, all machine parts, including energy supplies, must be abrasion-resistant. The e-skin® corrugated tube supplies systems with data, media, and energy without unwanted particles contaminating the air. The corrugated tube consists of separable upper and lower shells, which can be easily put together by a "zipper" to a fully enclosed tube. The simple reclosable mechanism enables easy maintenance and inspection of the installed cables.

Benefits

- Abrasion-resistant
- IPA classification ISO Class 1
- Compact and modular design
- Easy to open and flexible filling
- Reclosable opening mechanism
- e-skin® SK for longer unsupported lengths
- e-skin® soft SKS with more elastic material and lower installation height
- 5dB(A) quieter than usual "clean cable"
- Interior separation system consisting of "tribo-optimised" iglidur® material - to further minimise abrasion between the cables

Typical application areas

- Cleanroom
- Fast, short, unsupported applications
- Hanging and standing applications
- Display and semiconductor production
- Pick & place applications
- Medical technology
- All machines that use corrugated tubes

Selection table

Part No.	Inner height *hi* [mm]	Outer height *ha* [mm]	Inner width *Bi* [mm]	Outer width *Ba* [mm]	Bend radius *R* [mm]	Unsupported length ≤ [m]	Page
e-skin® SK - corrugated tube energy supply for longer unsupported lengths							
SK28	28	40	68	95	055	1.1	**364**
SK40	38	57	85	118	100	2.0	**364**
e-skin® soft SKS - corrugated tube energy supply with more elastic material and lower clearance height							
SKS20	20	25	33	50	055	0.6	**364**
SKS24	24	36	48	75	055	0.7	**364**
SKS28	28	40	68	95	055	0.7	**364**
SKS40	38	57	85	118	100	1.3	**364**

Technical data

General properties	
Speed FL_G/acceleration FL_G	≤ 10m/s / ≤ 75m/s²
SK energy supply system, igumer S material - permitted temperature °C	-10°C / +50°C
SK energy supply system, igumer SKS material - permitted temperature °C	-10°C / +50°C
Mounting bracket, igumid® NB material - permitted temperature °C	-10°C / +50°C
Flammability class	UL94-HB

Installation types, maximum travel lengths

Series	Unsupported	Vertical hanging	Vertical standing	Side mounted, unsupported
SK28	≤ 2.20m	upon request	upon request	upon request
SK40	≤ 4.00m	upon request	upon request	upon request
SKS20	≤ 1.20m	upon request	upon request	upon request
SKS24	≤ 1.40m	upon request	upon request	upon request
SKS28	≤ 1.40m	upon request	upon request	upon request
SKS40	≤ 2.60 m	upon request	upon request	upon request

Proof IPA classification

Report No. IG 1504-755 for 0.SK28.068.02.1 (prototype)
Report No. IG 1907-1125 for SKS28.068.02.1 including cables

Test parameters		Result
v_1 = 0.5m/s	a_1 = 1.0m/s²	Cleanroom class 1
v_2 = 1.0m/s	a_2 = 2.0m/s²	Cleanroom class 1
v_3 = 2.0m/s	a_3 = 4.0m/s²	Cleanroom class 1
Overall result		**ISO Class 1**

Product range



Part No. SK	Part No. SKS	*hi* [mm]	*ha* [mm]	*Bi* [mm]	*Ba* [mm]	*R min.* [mm]	SK H_F [mm]	SKS H_F [mm]	Weight [kg/m]
–	SKS20.033.02.1	20	25	33	50	055	–	160[1)]*/200[1)]*	≈ 0.20
–	SKS24.048.02.1	24	36	48	75	055	–	200[2)]	≈ 0.40
SK28.068.02.1	SKS28.068.02.1	28	40	68	95	055	265[2)]	200[2)]	≈ 0.54
SK40.085.02.1	SKS40.085.02.1	38	57	85	118	100	450[2)]	350[2)]	≈ 1.15

Note: *min. R*. The minimum bend radius is determined by the inner side corrugated tube!

1) Required clearance height: H_F with 0.50kg/m fill weight

2) Required clearance height: H_F with 0.75kg/m fill weight

*H_F: 160mm at S < 200m / H_F: 200mm at S > 200m

Order key

SKS28.068.02.1

Series / Type	Inner height	Width index	Version	Colour index

Note:
The minimum bend radius is determined by the inner side corrugated tube! No bend radius is specified in the part number, since it depends on travel and fill weight. The smallest specified radius below is the minimum to guarantee the service life of the cables. In most applications, however, the radius remains larger because the shape of the tube defines this.

Also available - e-skin® hybrid corrugated tubes SKY

- e-skin® hybrid SKY combines the advantages of e-skin® SK and e-skin® soft SKF, available upon request
- 13% lower clearance height than e-skin® SK28 und 28% longer unsupported length than SKS28 (based on test results in the igus® laboratory)
- For unsupported length up to 1.4m and installation space from 200mm



Available from stock

Upon request

Installation dimensions SK

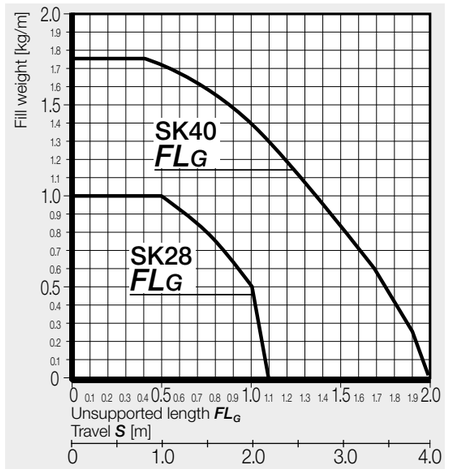

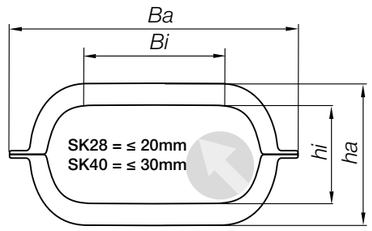

SK28 *hi* [mm]	28
SK40 *hi* [mm]	38
e-chain® length	$L_K = S/2 + K$

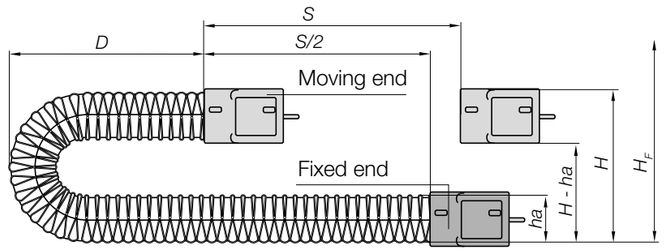

Series	SK28	SK40
R min.	055	100
H	250	350
D	160	300
K	399	707

Note: *min. R*. The minimum bend radius is determined by the inner side corrugated tube!

Installation height SKS

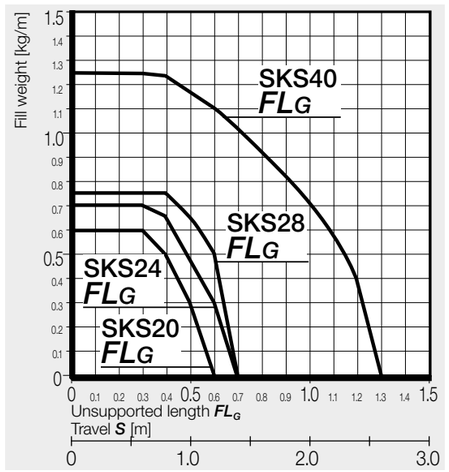

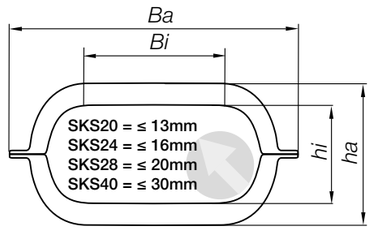

SKS20 *hi* [mm]	20
SKS24 *hi* [mm]	24
SKS28 *hi* [mm]	28
SKS40 *hi* [mm]	38
e-chain® length	$L_K = S/2 + K$

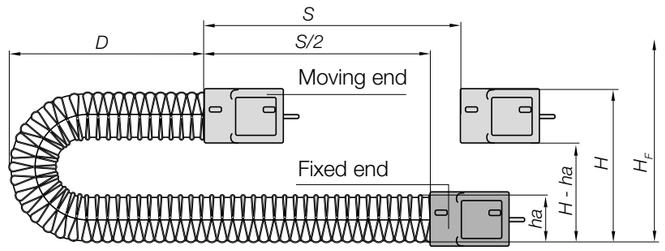

Series	SKS20	SKS24	SKS28	SKS40
R min.	055	055	055	100
H	150	150	150	300
D	125	150	160	300
K	300	310	280	630

Note: *min. R*. The minimum bend radius is determined by the inner side corrugated tube!

KMA mounting brackets | Attachment from any side

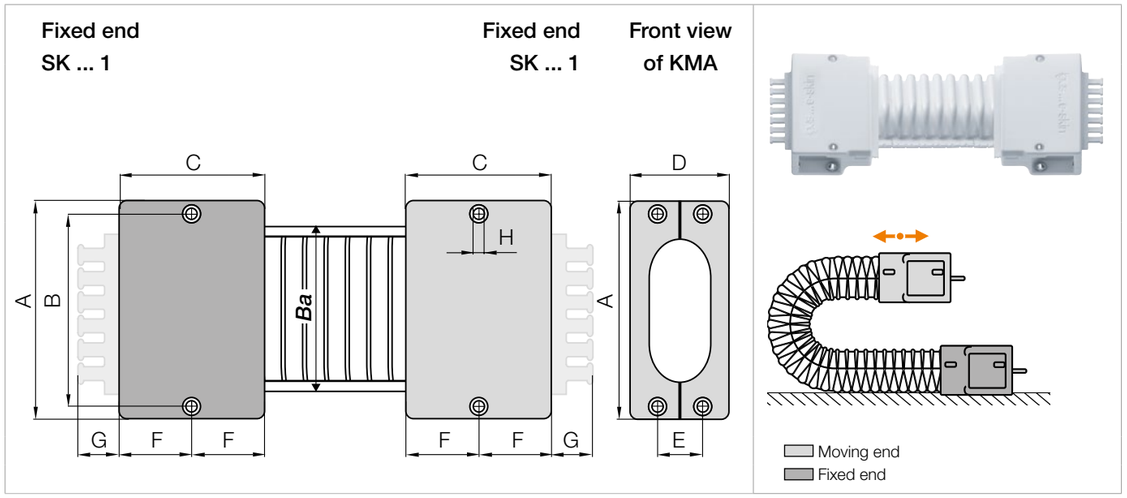

Width index	Part No. Full set KMA without tiewrap plates	KMA with tiewrap plates	A [mm]	B [mm]	C [mm]	D [mm]	E [mm]	F [mm]	G [mm]	H [mm]	Number of teeth
033.	–	**SK200.033.12ZB.1**	53	44	25	28	–	5	7	4.4	2 x 3
033.	–	**SK201.033.12ZB.1***	56	44	40	31	12	10	7	4.4	2 x 3
048.	**SK240.048.12.1**	**SK240.048.12ZB.1**	84	72	68	42	17	35	18	5.8	4
068.	**SK280.068.12.1**	**SK280.068.12ZB.1**	104	92	68	46	21	35	18	5.8	6
085.	**SK400.085.12.1**	**SK400.085.12ZB.1**	126	114	70	66	41	35	18	5.8	8

*Larger, reinforced mounting bracket for the smallest e-skin® soft SKS20.
(KMA = polymer metal mounting bracket)

Order key

SK280.068.12ZB.1.A

Series | Width index | Full set | With integrated strain relief tiewrap plates | Colour index | Pre-fitted

Note: The bracket orientations are set automatically when using this igus® KMA mounting bracket. To receive a KMA mounting bracket pre-fitted please add index **.A**.

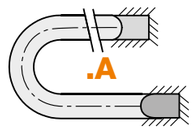

Available from stock
Upon request

e-skin® | Series SK / Series SKS

SK SKS

Interior separation | Smooth, round interior separation, iglidur® J material

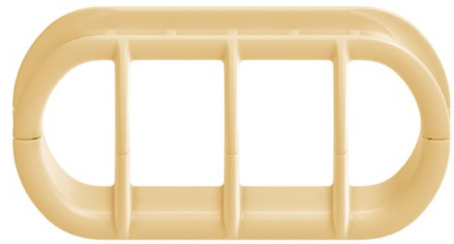

- Up to 77% less cable abrasion compared with igumid® G L standard material
- Consists of upper and lower shells onto which separators have already been sprayed
- Can be combined with shelves
- Highly wear-resistant thanks to tribo-plastic material iglidur® J from the iglidur® range of materials
- Maintenance-friendly and easy to retrofit

Installation dimensions [mm]	Part No. Smooth, round interior separation*		Installation dimensions [mm]	Part No. Full-width shelf, continuous	
For SKS20 series					
	unassembled **SK20.2.H.5**	assembled **SK20.2.H.5.1**	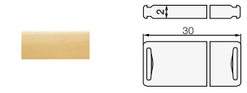	unassembled **110.30.J**	assembled **111.30.J**
For SKS24 series					
	unassembled **SK24.2.H.5**	assembled **SK24.2.H.5.1**	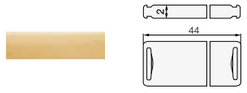	unassembled **110.44.J**	assembled **111.44.J**
For SK28 / SKS28 series					
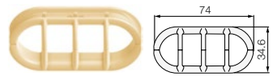	unassembled **SK28.3.H.5**	assembled **SK28.3.H.5.1**	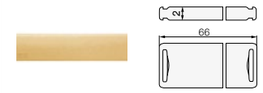	unassembled **110.66.J**	assembled **111.66.J**
For SK40 / SKS40 series					
	unassembled **SK40.3.H.5**	assembled **SK40.3.H.5.1**		unassembled **110.82.J**	assembled **111.82.J**

***Note:** Always fit onto the connection points.

e-skin® corrugated tubes - designed in seconds

- Create filling options and configure them completely with interior separation, mounting brackets and chainflex® cables
- Automatic creation of a parts list and drawing with dimensioning
- Easy inquiry and order of the complete corrugated tube



Available from stock
Upon request

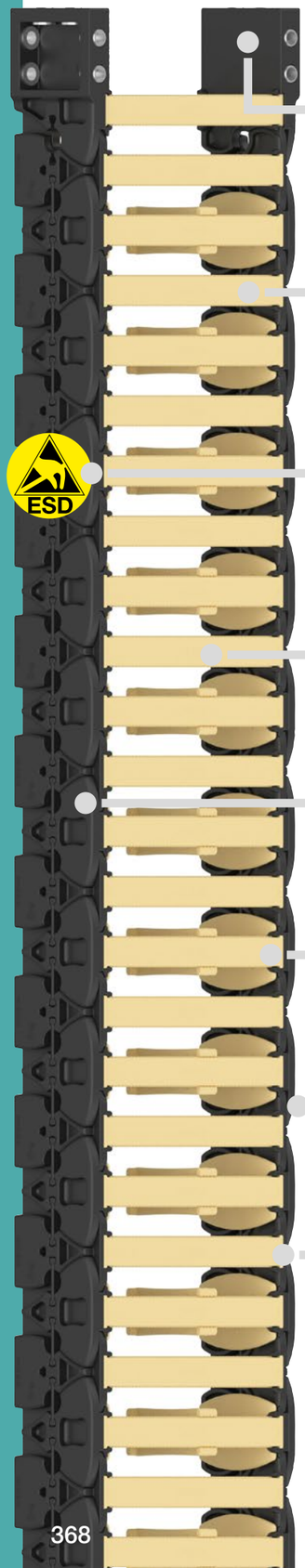

Attachment from any side with KMA mounting brackets

Fast assembly: crossbars removable along the inner and outer radius

Electrostatically dissipative: side parts made of ESD material to prevent static buildup

Standard: crossbars and interior separations made from iglidur® J

Dynamic: high speeds and accelerations

Long service life: low vibration, high strength

IPA cleanroom Class 1: virtually no wear or abrasion

Modular design: can be easily lengthened and shortened

Highest cleanroom suitability, very low abrasion, high strength - C6

The series meeting the highest cleanroom requirements is available in three inner heights: 29, 38 and 53mm. Optimised with the crossbars every link along the outer radius and as standard with crossbars and interior separations made of iglidur® J, the optimum friction partner for any cable jacket material. The side links are made of tribo-optimised low-wear dissipative ESD material as standard.

Benefits

- Optimised design without any measurable abrasion
- For ISO cleanroom Class 1 applications
- High strength due to tough double stop-dog system
- Very quiet operation
- Side parts made of ESD material
- Long service life due to low life cycle costs
- Easy and therefore cost-saving installation
- Tribo-optimised iglidur® J crossbars and interior separations

Typical application areas

- Electrical manufacturing
- Semiconductor industry
- FPD production
- Microelectronics
- Panel robots
- Packaging
- Plotters/printers
- Pharmaceutical industry

Selection table

Part No.	Inner height *hi* [mm]	Outer height *ha* [mm]	Inner width *Bi* [mm]	Outer width *Ba* [mm]	Bend radius *R* [mm]	Unsupported length ≤ [m]	Page
C6 - e-chains® with crossbars every link, crossbars removable along the inner and outer radius							
C6.29	29	38	30 - 140	46 - 156	055 - 150	≈ 1.75	**370**
C6.38	38	47	30 - 140	48 - 158	060 - 150	≈ 2.50	**374**
C6.53	53	67.5	50 - 175	74 - 199	075 - 200	≈ 3.00	**378**

Technical data

General properties

Speed FL_G/acceleration FL_G	≤ 20m/s / ≤ 200m/s²
Speed FL_B/acceleration FL_B	≤ 3m/s / ≤ 6m/s²
igumid® ESD LW side part material - permitted temperature °C	upon request
iglidur® J crossbar material - permitted temperature °C	-50°C / +90°C
Crossbar material, igumid® TE - permitted temperature °C	-40°C / +70°C
Flammability class, igumid® ESD LW, iglidur® J, igumid® TE	VDE 0304 IIC UL94-HB

Installation types, maximum travel lengths

Series	Unsupported	Vertical hanging	Vertical standing	Side mounted, unsupported
C6.29	≤ 3.50m	≤ 25m	≤ 2.0m	upon request
C6.38	≤ 5.00m	≤ 50m	≤ 2.0m	upon request
C6.53	≤ 6.00m	≤ 50m	≤ 2.0m	upon request

Proof

IPA Qualification Certificate - Report IG 2304-1412 for C6 system C6, C6.29.060.100.17 series

Test parameters		Result
v_1 = 0.5m/s	a_1 = 1.0m/s²	Cleanroom Class 1
v_2 = 1.0m/s	a_2 = 2.0m/s²	Cleanroom Class 1
v_3 = 2.0m/s	a_3 = 4.0m/s²	Cleanroom Class 1
Overall result		**ISO Class 1**

Fraunhofer IPA TESTED® DEVICE igus GmbH C6.29.060.100.17 Report No. IG 2304-1412 valid until November 22, 2029

Product range



Part No. e-chains® Crossbars removable	*Bi* [mm]	*Ba* [mm]	C6.29 [kg/m]
C6.29.030.□.17	30	46	≈ 0.63
C6.29.040.□.17	40	56	≈ 0.68
C6.29.050.□.17	50	66	≈ 0.72
C6.29.060.□.17	60	76	≈ 0.77
C6.29.070.□.17	70	86	≈ 0.80

Part No. e-chains® Crossbars removable	*Bi* [mm]	*Ba* [mm]	C6.29 [kg/m]
C6.29.080.□.17	80	96	≈ 0.85
C6.29.100.□.17	100	116	≈ 0.95
C6.29.120.□.17	120	136	≈ 1.05
C6.29.140.□.17	140	156	≈ 1.16

Available bend radii *R* [mm] | 055 | 075 | 100 | 150 |

Order key

C6.29.100.100.17

Series / Type	Inner height	Width index	Bend radius	Colour index

Order example:
Complete Part No. with the required radius □ *R* □. Example:
C6.29.100.100.17 = openable along inner and outer radius, from both sides

Available from stock
Upon request

Unsupported applications | Short travels

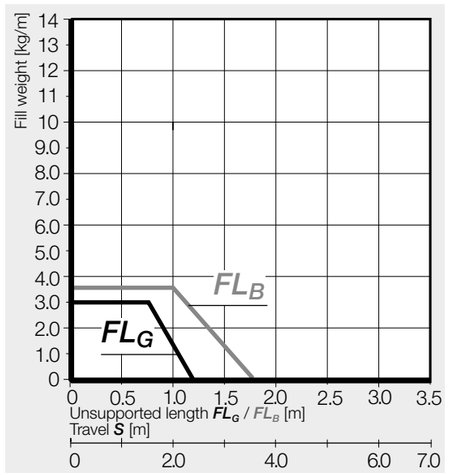

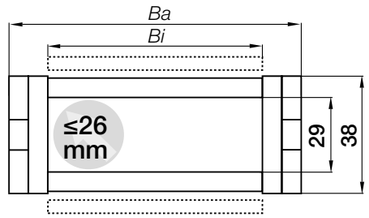

Inner height [mm]	29
Pitch [mm]	22
Links/m [pc.]	46
corresponds to [mm]	1,012
e-chain® length	$L_K = S/2 + K$

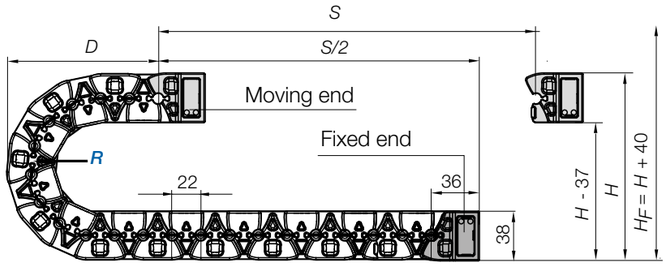

R	055	075	100	150
H	178	218	268	368
D	107	127	152	202
K	217	236	315	472

The required clearance height: $H_F = H + 40$mm (with 2.0kg/m fill weight)

Available from stock
Upon request

KMA mounting brackets | Attachment from any side | Pivoting

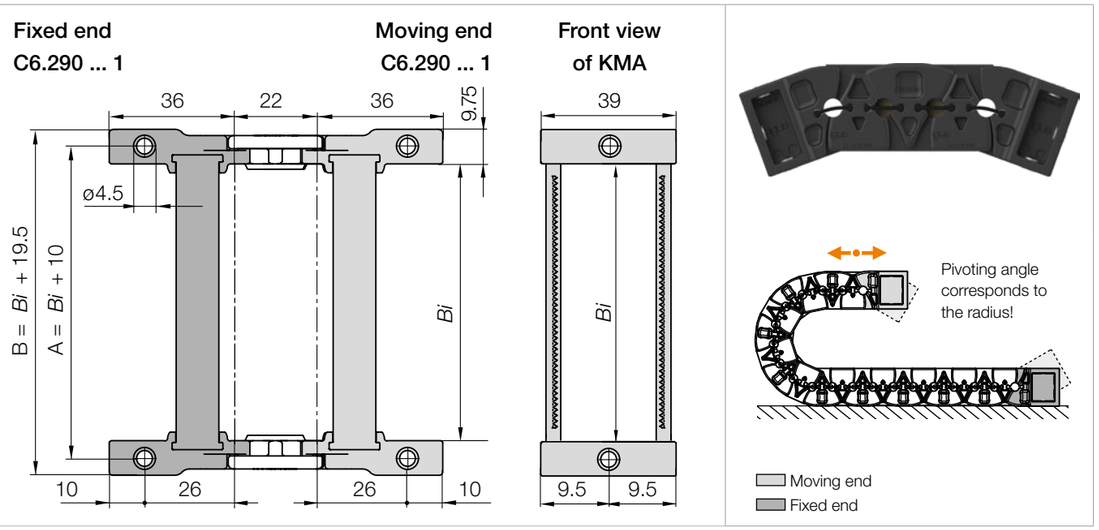

Width index	KMA full set Part No. pivoting	A [mm]	B [mm]	Bi [mm]
030.	C6.290.030.12	40	49.5	30
040.	C6.290.040.12	50	59.5	40
050.	C6.290.050.12	60	69.5	50
060.	C6.290.060.12	70	79.5	60
070.	C6.290.070.12	80	89.5	70

Width index	KMA full set Part No. pivoting	A [mm]	B [mm]	Bi [mm]
080.	C6.290.080.12	90	99.5	80
100.	C6.290.100.12	110	119.5	100
120.	C6.290.120.12	130	139.5	120
140 .	C6.290.140.12	140	149.5	140

(KMA = polymer metal mounting bracket)

Order key

C6.290.100.12 .A

Series	Width index	Full set	Pre-fitted

Note: The bracket orientations are set automatically when using this igus® KMA mounting bracket. To receive a KMA mounting bracket pre-fitted please add index **.A**.

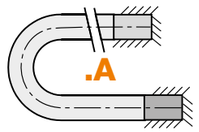

KMA mounting brackets only available for an odd number of links.

Available from stock
Upon request

Interior separation | For minimum cable abrasion, made from iglidur® J

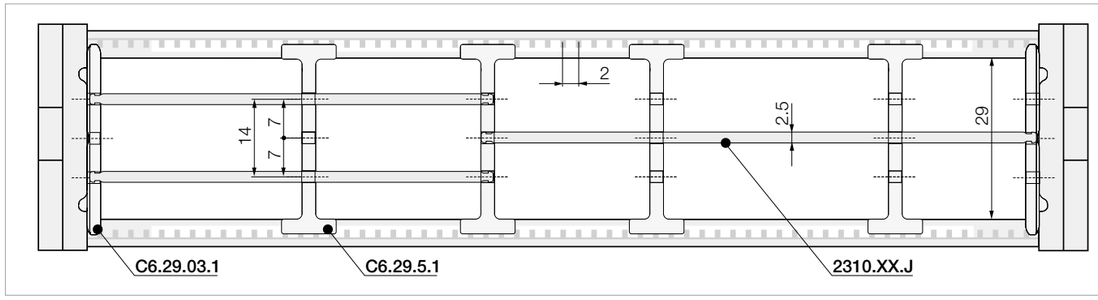

No lateral gap to side links necessary.
As standard separators are fitted every 2nd e-chain® link!

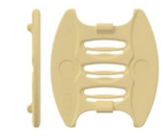

Part No. Side plate	
unassembled	C6.29.03
assembled	C6.29.03.1

Slotted side plate

Side plate made from iglidur® J for minimum cable abrasion. Allows modular shelving right up to the side links. No clearance required!



Part No. Notch separator	
unassembled	C6.29.5
assembled	C6.29.5.1

Locks securely in preset increments

iglidur® J notch separator for exact positioning.



Part No. Strain relief separator	
unassembled	C6.29.5.Z
assembled	C6.29.5.Z.1

Strain relief separators

Separator with integrated strain relief teeth made from iglidur® J. For assembly either at the first or last e-chain® link. For restricted space conditions.



Part No. Shelf	
unassembled	2300.XX.J
assembled	2310.XX.J

Horizontal separation made from iglidur® J

Full-width shelf locks securely into separators at both ends, giving a fixed width. Can be used as full-width or modular shelving.

Width [mm]	Part No. unassembled	Part No. assembled
025	2300.025.J	2310.025.J
030	2300.030.J	2310.030.J
040	2300.040.J	2310.040.J
050	2300.050.J	2310.050.J
060	2300.060.J	2310.060.J
070	2300.070.J	2310.070.J
080	2300.080.J	2310.080.J
100	2300.100.J	2310.100.J
120	2300.120.J	2310.120.J
125	2300.125.J	2310.125.J
140	2300.140.J	2310.140.J

More widths available upon request, please consult igus® for delivery time.

Available from stock
Upon request

Product range

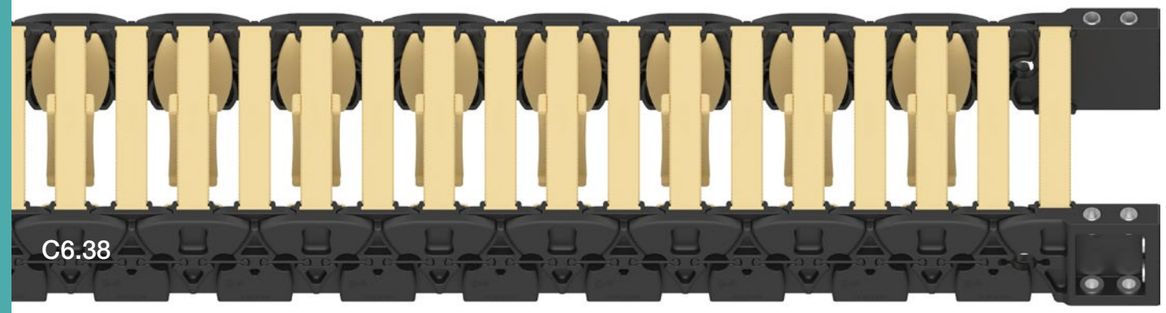

Part No. e-chains® Crossbars removable	Bi [mm]	Ba [mm]	C6.38 [kg/m]
C6.38.030.□.17	30	46	≈ 0.84
C6.38.040.□.17	40	56	≈ 0.88
C6.38.050.□.17	50	66	≈ 0.91
C6.38.060.□.17	60	76	≈ 0.96
C6.38.070.□.17	70	86	≈ 0.99

Part No. e-chains® Crossbars removable	Bi [mm]	Ba [mm]	C6.38 [kg/m]
C6.38.080.□.17	80	96	≈ 1.03
C6.38.100.□.17	100	116	≈ 1.11
C6.38.120.□.17	120	136	≈ 1.20
C6.38.140.□.17	140	156	≈ 1.29

Available bend radii *R* [mm] | 060 | 075 | 100 | 125 | 150 |

Order key

C6.38.100.100.17

Series / Type	Inner height	Width index	Bend radius	Colour index

Order example:
Complete Part No. with the required radius □ *R*. Example:
C6.38.100.100.17 = crossbars removable along the inner and outer radius

Available from stock
Upon request

Unsupported applications | Short travels

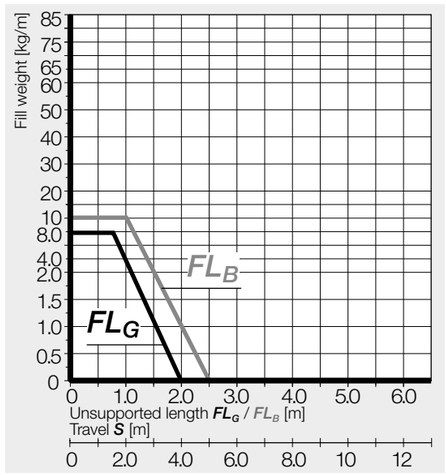

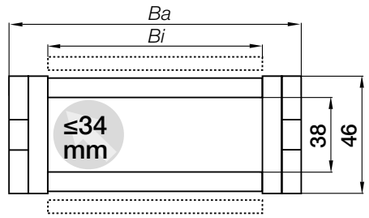

Inner height [mm]	38
Pitch [mm]	25
Links/m [pc.]	40
corresponds to [mm]	1,000
e-chain® length	$L_K = S/2 + K$

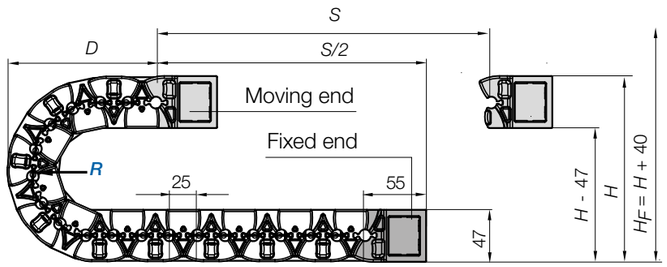

R	060	075	100	125	150
H	205	235	285	335	385
D	121	136	161	186	211
K	239	236	315	393	472

The required clearance height: H_F = *H* + **40mm** (with 2.0kg/m fill weight)

Available from stock
Upon request

KMA mounting brackets | Attachment from any side | Pivoting

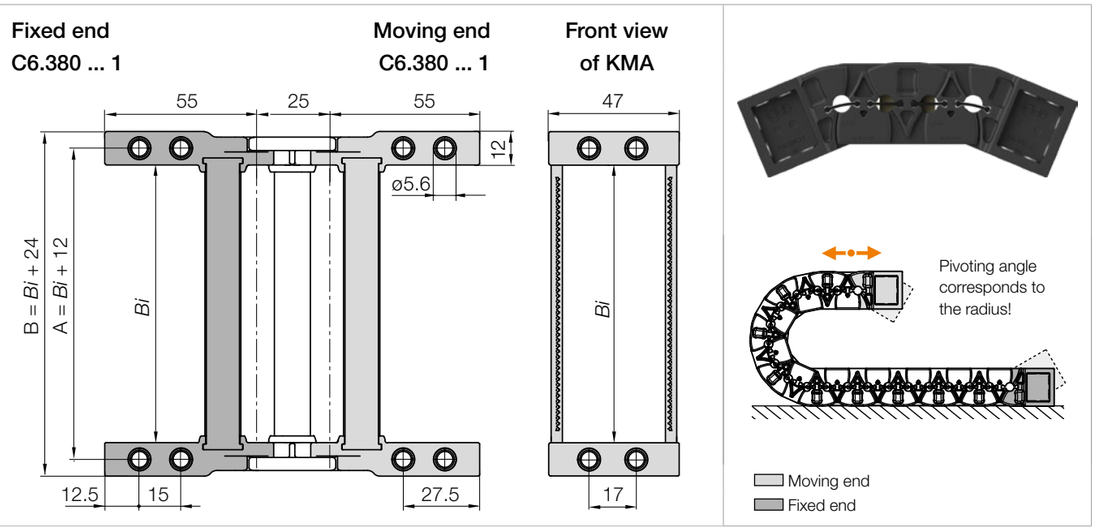

Width index	KMA full set Part No. pivoting	A [mm]	B [mm]	Bi [mm]
030.	C6.380.030.12	42	54	30
040.	C6.380.040.12	52	64	40
050.	C6.380.050.12	62	74	50
060.	C6.380.060.12	72	84	60
070.	C6.380.070.12	82	94	70

Width index	KMA full set Part No. pivoting	A [mm]	B [mm]	Bi [mm]
080.	C6.380.080.12	92	104	80
100.	C6.380.100.12	112	124	100
120.	C6.380.120.12	132	144	120
140.	C6.380.140.12	152	164	140

(KMA = polymer metal mounting bracket)

Order key

C6.380.100.12 .A

Series	Width index	Full set	Pre-fitted

Note: The bracket orientations are set automatically when using this igus® KMA mounting bracket. To receive a KMA mounting bracket pre-fitted please add index **.A**.

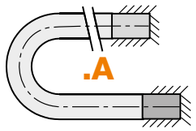

KMA mounting brackets only available for an odd number of links.

Available from stock
Upon request

Interior separation | For minimum cable abrasion, made from iglidur® J

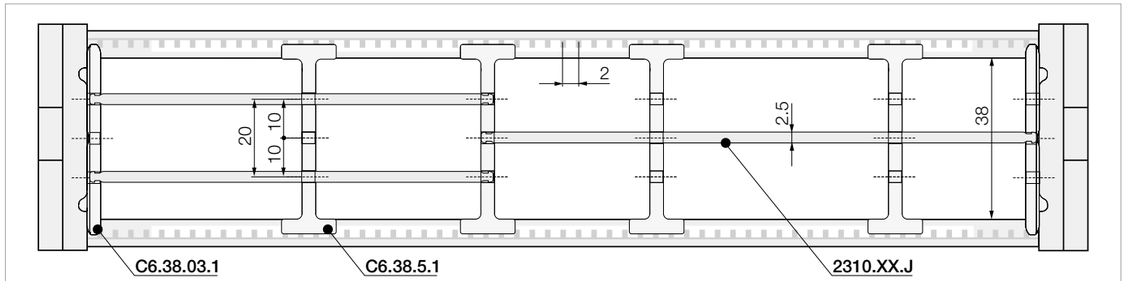

No lateral gap to side links necessary.
As standard separators are fitted every 2nd e-chain® link!

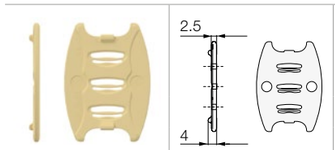

Part No. Side plate	
unassembled	C6.38.03
assembled	C6.38.03.1

Slotted side plate

Side plate made from iglidur® J for minimum cable abrasion. Allows modular shelving right up to the side links. No clearance required!

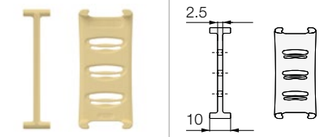

Part No. Notch separator	
unassembled	C6.38.5
assembled	C6.38.5.1

Locks securely in preset increments

iglidur® J notch separator for exact positioning.

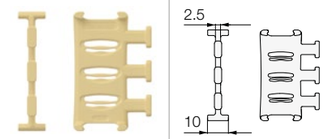

Part No Strain relief separator	
unassembled	C6.38.5.Z
assembled	C6.38.5.Z.1

Strain relief separators

Separator with integrated strain relief teeth made from iglidur® J. For assembly either at the first or last e-chain® link. For restricted space conditions.

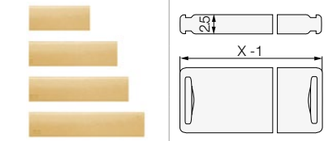

Part No. Shelf	
unassembled	2300.XX.J
assembled	2310.XX.J

Horizontal separation made from iglidur® J

Full-width shelf locks securely into separators at both ends, giving a fixed width. Can be used as full-width or modular shelving.

Width [mm]	Part No. unassembled	Part No. assembled
025	2300.025.J	2310.025.J
030	2300.030.J	2310.030.J
040	2300.040.J	2310.040.J
050	2300.050.J	2310.050.J
060	2300.060.J	2310.060.J
070	2300.070.J	2310.070.J
080	2300.080.J	2310.080.J
100	2300.100.J	2310.100.J
120	2300.120.J	2310.120.J
125	2300.125.J	2310.125.J
140	2300.140.J	2310.140.J

More widths available upon request, please consult igus® for delivery time.

Available from stock
Upon request

Product range

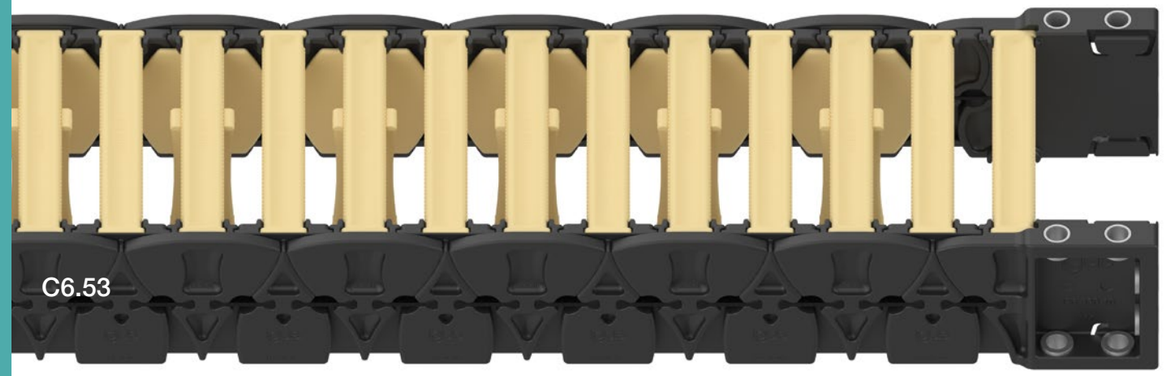

Part No. e-chains® Crossbars removable	Bi [mm]	Ba [mm]	C6.53 [kg/m]
C6.53.050.□□.17	50	74	≈ 1.53
C6.53.062.□□.17	62.5	86.5	≈ 1.59
C6.53.075.□□.17	75	99	≈ 1.67
C6.53.087.□□.17	87.5	111.5	≈ 1.73

Part No. e-chains® Crossbars removable	Bi [mm]	Ba [mm]	C6.53 [kg/m]
C6.53.100.□□.17	100	124	≈ 1.80
C6.53.125.□□.17	125	149	≈ 1.92
C6.53.175.□□.17	175	199	≈ 2.18

Available bend radii *R* [mm] | 075 | 100 | 125 | 150 | 175 | 200 |

Order key

C6.53.100.100.17

Series / Type	Inner height	Width index	Bend radius	Colour index

Order example:
Complete Part No. with the required radius □*R*□. Example:
C6.53.100.100.17 = crossbars removable along the inner and outer radius

Available from stock
Upon request

Unsupported applications | Short travels

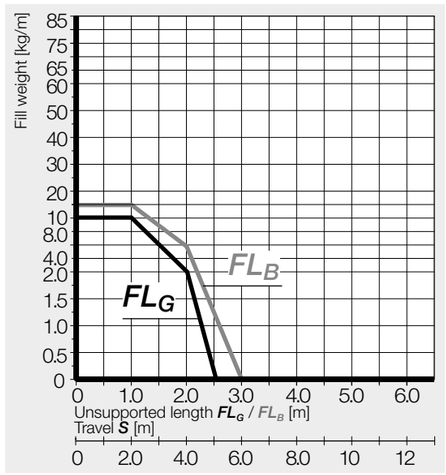

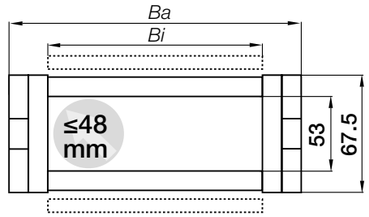

Inner height [mm]	53
Pitch [mm]	30
Links/m [pc.]	34
corresponds to [mm]	1,020
e-chain® length	$L_K = S/2 + K$

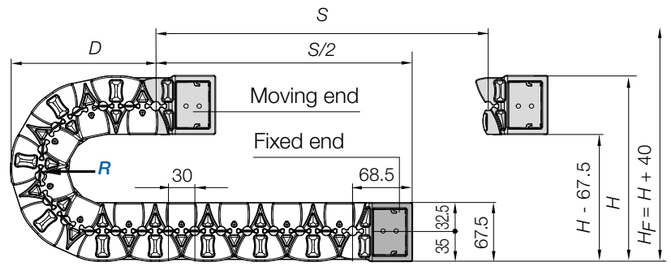

R	075	100	125	150	175	200
H	270	320	370	420	470	520
D	155	180	205	230	255	280
K	296	375	453	532	610	689

The required clearance height: $H_F = H$ + **40mm** (with 2.0kg/m fill weight)

Available from stock
Upon request

KMA mounting brackets | Attachment from any side | Pivoting

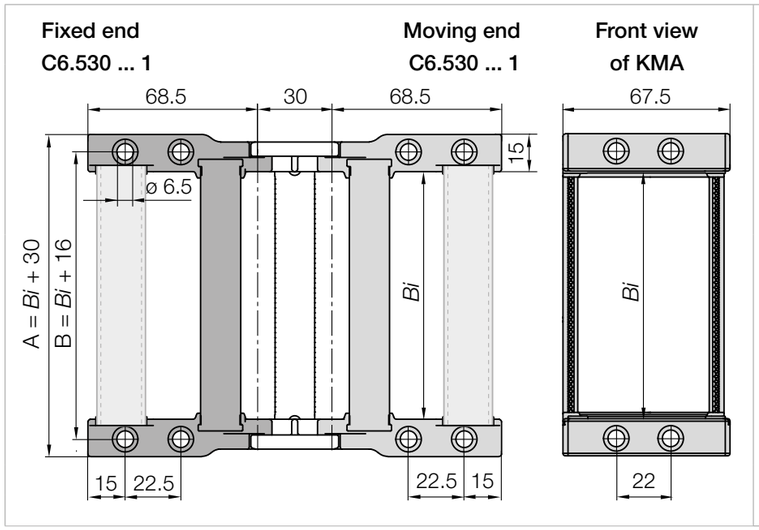

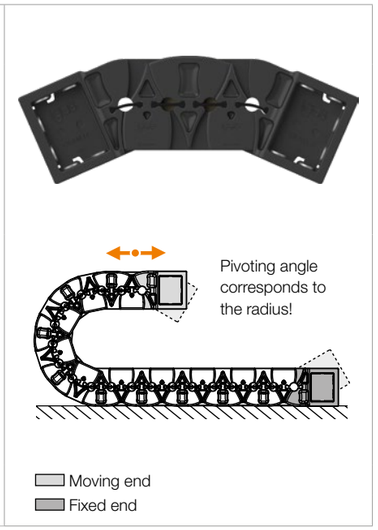

Width index	KMA full set Part No. pivoting	A [mm]	B [mm]	Bi [mm]
050.	C6.530.050.12.☐	80	66	50
062.	C6.530.062.12.☐	92.5	78.5	62.5
075.	C6.530.075.12.☐	105	91	75
087.	C6.530.087.12.☐	117.5	103.5	87.5

Width index	KMA full set Part No. pivoting	A [mm]	B [mm]	Bi [mm]
100.	C6.530.100.12.☐	130	116	100
125.	C6.530.125.12.☐	155	141	125
175.	C6.530.175.12.☐	205	191	175

(KMA = polymer metal mounting bracket)

Order key

C6.530.100.12 .C .A2

Series	Width index	Full set	C-profile option	Pre-fitted
C6.530	100	12	.C	.A2

Note: Possible orientations for KMA mounting brackets. For mounting brackets pre-fitted **without strain relief**, please add index **.A**. For types pre-fitted **with strain relief** please add index **.A1**, **.A2**, **.A3** or **.A4**.



For the C-profile option please add index **.C**. KMA mounting brackets are only available for an odd number of links.

Available from stock
Upon request

Interior separation | For minimum cable abrasion, made from iglidur® J

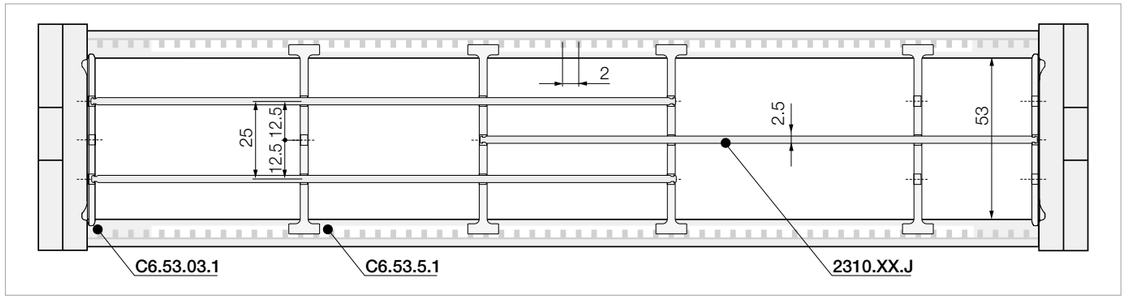

No lateral gap to side links necessary.
As standard separators are fitted every 2nd e-chain® link!



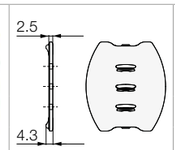

Part No. Side plate	
unassembled	C6.53.03
assembled	C6.53.03.1

Slotted side plate

Side plate made from iglidur® J for minimum cable abrasion. Allows modular shelving right up to the side links. No clearance required!



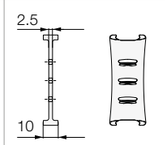

Part No. Notch separator	
unassembled	C6.53.5
assembled	C6.53.5.1

Locks securely in preset increments

iglidur® J notch separator for exact positioning.



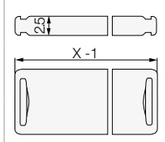

Part No. Shelf	
unassembled	2300.XX.J
assembled	2310.XX.J

Horizontal separation made from iglidur® J

Full-width shelf locks securely into separators at both ends, giving a fixed width. Can be used as full-width or modular shelving.

Width [mm]	Part No. unassembled	Part No. assembled
025	2300.025.J	2310.025.J
030	2300.030.J	2310.030.J
040	2300.040.J	2310.040.J
050	2300.050.J	2310.050.J
060	2300.060.J	2310.060.J
070	2300.070.J	2310.070.J
080	2300.080.J	2310.080.J
100	2300.100.J	2310.100.J
120	2300.120.J	2310.120.J
125	2300.125.J	2310.125.J
140	2300.140.J	2310.140.J

More widths available upon request, please consult igus® for delivery time.

Available from stock
Upon request

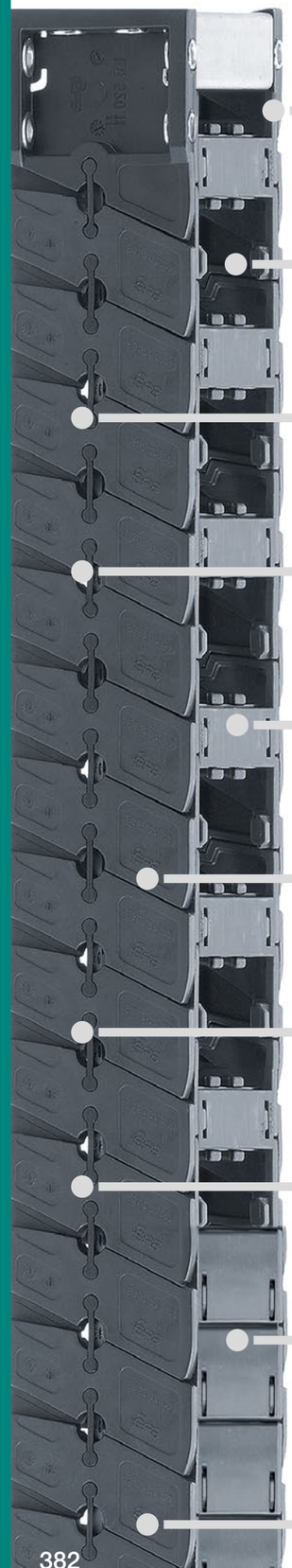

Attachment from any side with KMA mounting brackets

Low noise from 37dB(A)[1]: small pitch for low noise, smooth running

Long service life: low vibration, high strength

Dynamic: high speeds and accelerations

Quick assembly: openable along the inner and outer radius

Modular design: can be easily lengthened and shortened

No wear: polymer spring - no pin and bore connection

High strength: for unsupported applications

Variant: available as closed e-tube for some sizes

Fraunhofer IPA ISO Class 1 and dry cleanroom ISO Class 4 certified

Extremely low noise, vibration and abrasion, cleanroom suitable - system E6

The E6 series offers numerous advantages in addition to long life. It provides extremely quiet, low vibration operation, complimenting low vibration linear drives. It has virtually no polygon effect which can occur during the rolling motion of a standard e-chain®. The ultra-low noise levels have been confirmed in a recent report by the Rheinland Technical Inspection Agency. Our extensive product range offers the right e-chain® size for any application; a wide range of interior separation is also available.

Benefits

- For very high speeds and accelerations
- For small bend radii
- High strength
- Dry-room-compatible energy supply system with a long service life
- Low-noise 37dB(A)[1] - extremely low noise and vibration
- A series usable for all areas: cleanroom, dry cleanroom, and standard environments

1) Extremely low-noise - tested at the igus® lab

Typical application areas

- Cleanroom
- Stage and theatre technology
- Printing machines
- Automation
- Machine tools
- Measuring machines
- Semiconductor industry
- Medical technology
- Electronics industry
- Battery production

Selection table

Part No.	Inner height *hi* [mm]	Outer height *ha* [mm]	Inner width *Bi* [mm]	Outer width *Ba* [mm]	Bend radius *R* [mm]	Unsupported length ≤ [m]	Page
E6 - e-chains® with crossbars every 2nd link, crossbars removable along the inner and outer radius							
E6.29	29	35	30 - 140	46 - 156	055 - 150	≈ 1.75	**384**
E6.35	35	42	30 - 140	50 - 160	055 - 150	≈ 1.90	**388**
E6.40	40	54	40 - 300	60 - 320	063 - 200	≈ 2.50	**392**
E6.52	52	65	40 - 300	64 - 324	075 - 250	≈ 3.00	**398**
E6.62	62	84	50 - 400	86 - 436	115 - 350	≈ 4.00	**402**
E6.80L	80	108	87 - 550	115 - 578	150 - 300	≈ 2.50	**408**
E6.80	80	108	50 - 600	100 - 650	150 - 450	≈ 5.25	**414**
R6 - fully enclosed e-tubes, lids removable along the inner and outer radii							
R6.29	28	35	30 - 120	46 - 136	055 - 150	≈ 1.75	**384**
R6.40	40	54	62	82	063 - 200	≈ 2.50	**392**
R6.52	52	65	50 - 200	74 - 224	075 - 250	≈ 3.00	**398**

Proof

Certified for cleanrooms and dry cleanrooms

Fraunhofer IPA TESTED DEVICE igus GmbH E6.29.060.100.0 Report No. IG 2409-1552

Fraunhofer IPA TESTED DEVICE igus GmbH E6.29.060.100.0 Report No. IG 2303-1408

Technical data

General properties

Speed gliding[1] / acceleration gliding[1]	upon request
Speed FL_G/acceleration FL_G	≤ 20 [m/s] / ≤ 200 [m/s²]
Speed FL_B/acceleration FL_B	≤ 3 [m/s] / ≤ 6 [m/s²]
igumid® GE side part material - permitted temperature °C	-40°C / +120°C
igumid® G LW crossbar material - permitted temperature °C	-40°C / +120°C
Crossbar material, igumid® TE - permitted temperature °C	-40°C / +70°C
Flammability class	VDE 0304 IIC UL94-HB

Installation types, maximum travel lengths

Series	Unsupported	Gliding[1]	Vertical hanging	Vertical standing	Side mounted, unsupported
E6.29 / R6.29	≤ 3.50m	upon request	≤ 30m	≤ 2.0m	upon request
E6.35	≤ 3.80m	upon request	≤ 30m	≤ 2.0m	upon request
E6.40 / R6.40	≤ 5.00m	upon request	≤ 30m	≤ 2.0m	upon request
E6.52 / R6.52	≤ 6.00m	upon request	≤ 50m	≤ 2.0m	upon request
E6.62	≤ 8.00m	upon request	≤ 60m	≤ 3.0m	upon request
E6.80L	≤ 5.00m	upon request	≤ 60m	≤ 4.0m	upon request
E6.80	≤ 10.5m	upon request	≤ 60m	≤ 4.0m	upon request

1) If a gliding application is required for a long travel, please consult igus®.

Product range

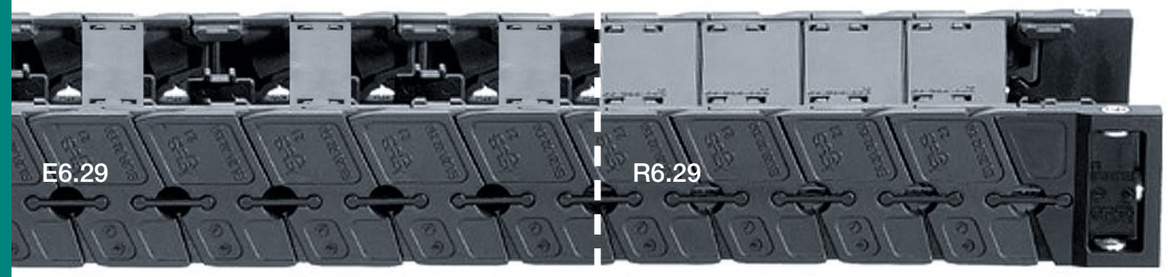

Part No. e-chains® cross-bars removable	Part No. e-tubes lids removable	*Bi* [mm]	*Ba* [mm]	E6.29 [kg/m]	R6.29 [kg/m]
E6.29.030.□.0	R6.29.030.□.0	30	46	≈ 0.73	≈ 0.80
E6.29.040.□.0	R6.29.040.□.0	40	56	≈ 0.75	≈ 0.85
E6.29.050.□.0	R6.29.050.□.0	50	66	≈ 0.78	≈ 0.89
E6.29.060.□.0	R6.29.060.□.0	60	76	≈ 0.80	≈ 0.94
E6.29.070.□.0	–	70	86	≈ 0.83	≈ 0.97
E6.29.080.□.0	R6.29.080.□.0	80	96	≈ 0.85	≈ 1.03
E6.29.090.□.0	–	90	106	≈ 0.88	≈ 1.08
E6.29.100.□.0	–	100	116	≈ 0.90	≈ 1.13
E6.29.110.□.0	R6.29.110.□.0	110	126	≈ 0.93	≈ 1.18
E6.29.120.□.0	R6.29.120.□.0	120	136	≈ 0.95	≈ 1.22
E6.29.140.□.0	–	140	156	≈ 1.00	–

Available bend radii *R* [mm] | 055 | 075 | 100 | 150 |

Order key

E6.29.080.100.0

Series / Type	Inner height	Width index	Bend radius	Colour index

Order example:
Complete Part No. with the required radius □ *R*. Example:
E6.29.080.100.0 = crossbars removable along the inner and outer radius
R6.29.080.100.0 = lids removable along the inner and outer radii
Order index for colour options ▶ **www.igus.eu/info-colours**

Available from stock
Upon request

Unsupported applications | Short travels

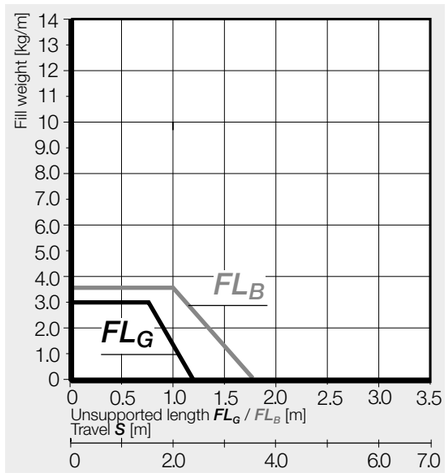

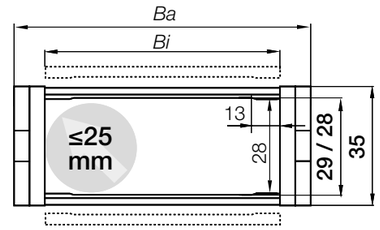

E6.29 inner height [mm]	29
R6.29 inner height [mm]	28
Pitch [mm]	22
Links/m [pc.]	46
corresponds to [mm]	1,012
e-chain® length	$L_K = S/2 + K$

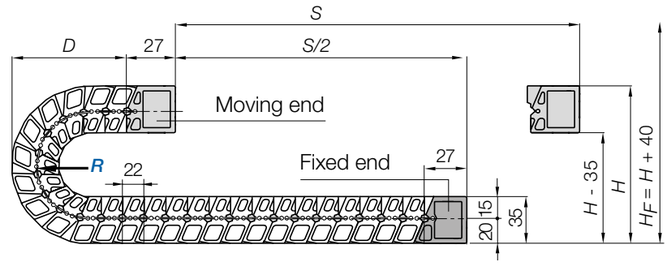

R	055	075	100	150
H	180	220	270	370
D	108	128	153	203
K	220	280	360	520

The required clearance height: $H_F = H$ **+ 40mm** (with 2.0kg/m fill weight)

Note: If a gliding application is required for a long travel, please consult igus®.

Available from stock
Upon request

KMA mounting brackets | Attachment from any side | Pivoting

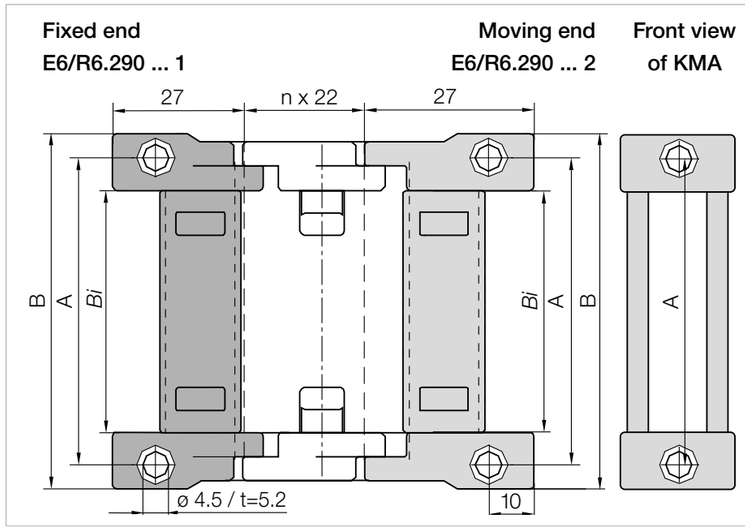

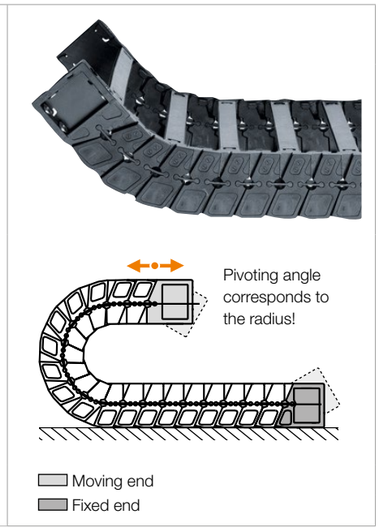

Width index	Full set KMA, pivoting				
	Part No. e-chains®	Part No. e-tubes	A [mm]	B [mm]	Bi [mm]
030.	**E6.290.030.12**	**R6.290.030.12**	40	59.5	30
040.	**E6.290.040.12**	**R6.290.040.12**	50	69.5	40
050.	**E6.290.050.12**	**R6.290.050.12**	60	79.5	50
060.	**E6.290.060.12**	**R6.290.060.12**	70	89.5	60
070.	**E6.290.070.12**	–	80	99.5	70
080.	**E6.290.080.12**	**R6.290.080.12**	90	109.5	80

Width index	Full set KMA, pivoting				
	Part No. e-chains®	Part No. e-tubes	A [mm]	B [mm]	Bi [mm]
090.	**E6.290.090.12**	–	100	119.5	90
100.	**E6.290.100.12**	–	110	129.5	100
110.	**E6.290.110.12**	**R6.290.110.12**	120	139.5	110
120.	**E6.290.120.12**	**R6.290.120.12**	130	149.5	120
140.	**E6.290.140.12**	–	150	169.5	140

(KMA = polymer metal mounting bracket)

Order key

E6.290 . 080.12 . A

Series	Width index	Full set	Pre-fitted

Note: The bracket orientations are set automatically when using this igus® KMA mounting bracket. To receive a KMA mounting bracket pre-fitted please add index **.A**.

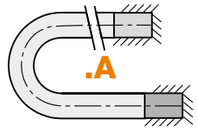

Available from stock
Upon request

Interior separation | Increase cable service life (only for e-chains®, for e-tubes ▶ next page)

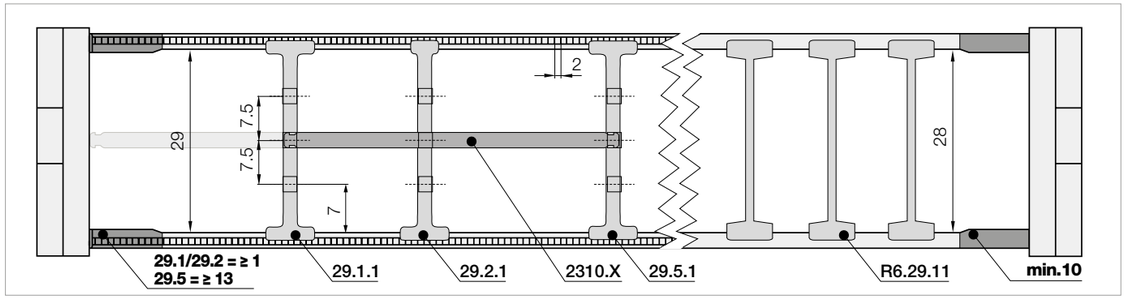

Note for e-tubes: Please be aware of the minimum lateral gap to the side links! **10mm**
e-chains®: Please be aware of the minimum lateral gap to the side links! **29.1/29.2 = 1mm / 29.5 = 13mm**
As standard separators are fitted every 2nd e-chain® link!

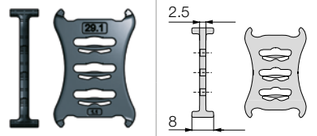

Part No. **Standard separator**
unassembled **29.1**
assembled **29.1.1**

For all applications
Standard separator with a wide base for maximum holding force.

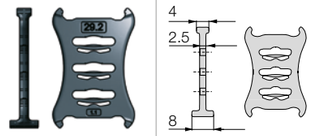

Part No. **Separator, narrow top**
unassembled **29.2**
assembled **29.2.1**

For even faster installation
Wide on one side for high holding force, narrow on opposite side for easy cable fitting.

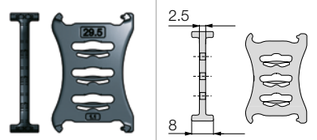

Part No. **Notch separator**
unassembled **29.5**
assembled **29.5.1**

Locks securely in preset increments
Notch separator for exact positioning. Recommended for side-mounted applications.

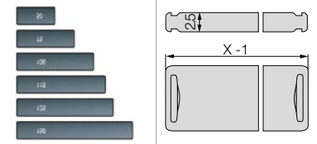

Part No. **Shelf**
unassembled **2300.X**
assembled **2310.X**

Horizontal separation
Full-width shelf locks securely into separators at both ends, giving a fixed width. Can be used as full-width or modular shelving.

Width [mm]	Part No. unassembled	Part No. assembled
015	**2300.015**	**2310.015**
025	**2300.025**	**2310.025**
030	**2300.030**	**2310.030**
038	**2300.038**	**2310.038**
040	**2300.040**	**2310.040**
050	**2300.050**	**2310.050**

Width [mm]	Part No. unassembled	Part No. assembled
057	**2300.057**	**2310.057**
060	**2300.060**	**2310.060**
062	**2300.062**	**2310.062**
065	**2300.065**	**2310.065**
070	**2300.070**	**2310.070**
075	**2300.075**	**2310.075**

Width [mm]	Part No. unassembled	Part No. assembled
077	**2300.077**	**2310.077**
080	**2300.080**	**2310.080**
087	**2300.087**	**2310.087**
090	**2300.090**	**2310.090**
100	**2300.100**	**2310.100**
103	**2300.103**	**2310.103**

Width [mm]	Part No. unassembled	Part No. assembled
110	**2300.110**	**2310.110**
120	**2300.120**	**2310.120**
125	**2300.125**	**2310.125**

Interior separation (only for e-tubes)

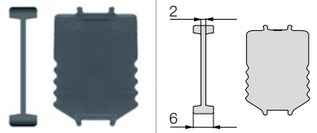

Part No. **Separator for e-tubes**
unassembled **R6.29.1**
assembled **R6.29.1.1**

Separator for e-tubes
Notches on the separator indicate the clamping side of the separator. The notches on this separator mark the side that fixes to the lid.

Product range



Part No. e-chains® crossbars removable	*Bi* [mm]	*Ba* [mm]	E6.35 [kg/m]
E6.35.030.□.0	30	50	≈ 0.88
E6.35.040.□.0	40	60	≈ 0.90
E6.35.050.□.0	50	70	≈ 0.92
E6.35.060.□.0	60	80	≈ 0.94
E6.35.070.□.0	70	90	≈ 0.96
E6.35.080.□.0	80	100	≈ 0.99

Part No. e-chains® crossbars removable	*Bi* [mm]	*Ba* [mm]	E6.35 [kg/m]
E6.35.090.□.0	90	110	≈ 1.01
E6.35.100.□.0	100	120	≈ 1.03
E6.35.110.□.0	110	130	≈ 1.05
E6.35.120.□.0	120	140	≈ 1.07
E6.35.140.□.0	140	160	≈ 1.11

Available bend radii *R* [mm] | 055 | 075 | 100 | 150 |

Order key

E6.35.100.100.0

Series / Type | Inner height | Width index | Bend radius | Colour index

Order example:
Complete Part No. with the required radius □ *R*. Example:
E6.35.100.100.0 = crossbars removable along the inner and outer radius
Order index for colour options ▶ **www.igus.eu/info-colours**

Available from stock
Upon request

Unsupported applications | Short travels

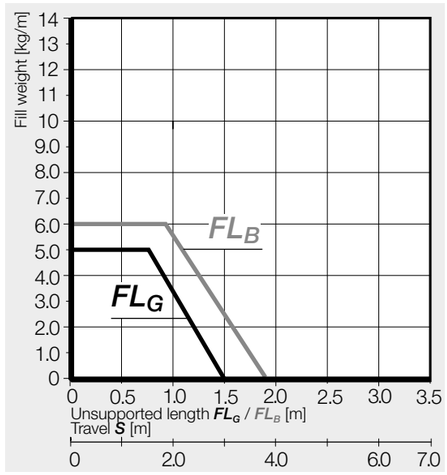

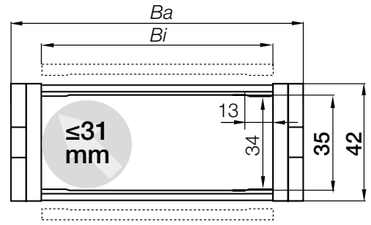

Inner height [mm]	35
Pitch [mm]	25
Links/m [pc.]	40
corresponds to [mm]	1,000
e-chain® length	$L_K = S/2 + K$

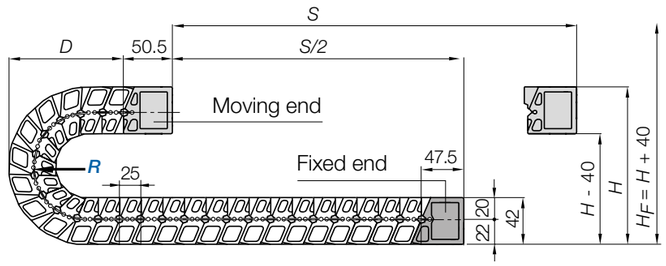

R	055	075	100	150
H	189	229	279	379
D	115	135	160	210
K	225	290	365	525

The required clearance height: $H_F = H$ **+ 40mm** (with 2.0kg/m fill weight)

Note: If a gliding application is required for a long travel, please consult igus®.

Available from stock
Upon request

KMA mounting brackets | Attachment from any side | Pivoting

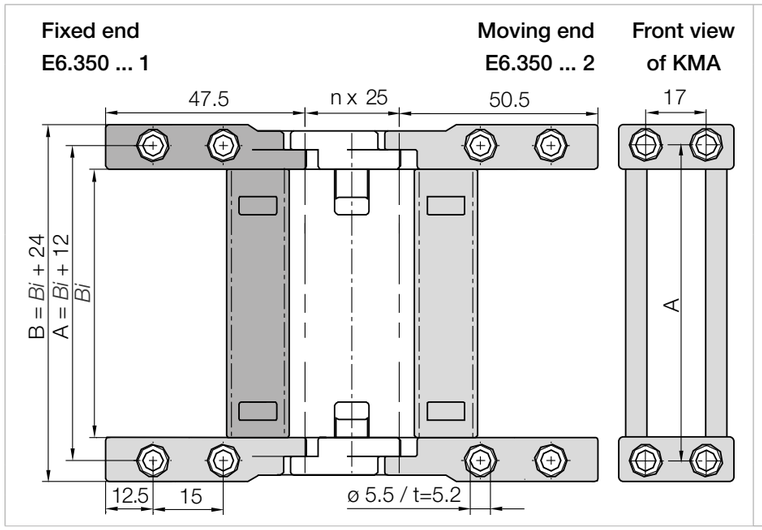

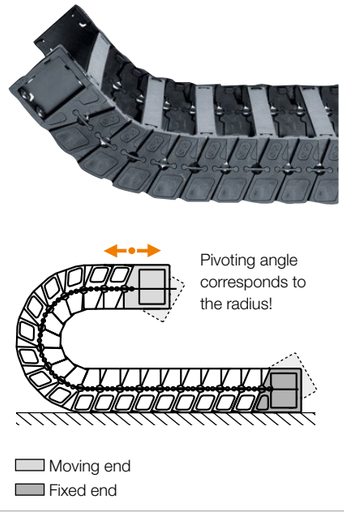

Width index	KMA full set Part No. pivoting	A [mm]	B [mm]	Bi [mm]
030.	**E6.350.030.12**	42	54	30
040.	**E6.350.040.12**	52	64	40
050.	**E6.350.050.12**	62	74	50
060.	**E6.350.060.12**	72	84	60
070.	**E6.350.070.12**	82	94	70
080.	**E6.350.080.12**	92	104	80

Width index	KMA full set Part No. pivoting	A [mm]	B [mm]	Bi [mm]
090.	**E6.350.090.12**	102	114	90
100.	**E6.350.100.12**	112	124	100
110.	**E6.350.110.12**	122	134	110
120.	**E6.350.120.12**	132	144	120
140.	**E6.350.140.12**	152	164	140

(KMA = polymer metal mounting bracket)

Order key

E6.350 . 100.12 . A

Series | Width index | Full set | Pre-fitted

Note: The bracket orientations are set automatically when using this igus® KMA mounting bracket. To receive a KMA mounting bracket pre-fitted please add index **.A**.

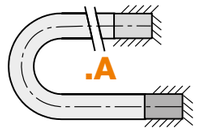

Available from stock
Upon request

Interior separation | Increase cable service life

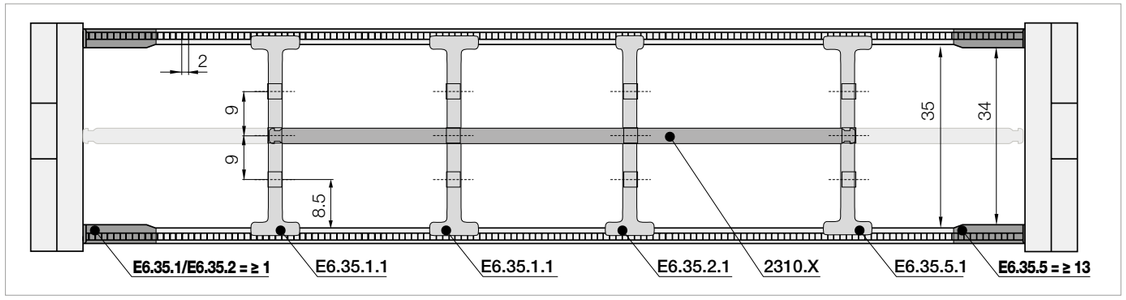

Note: Please be aware of the minimum lateral gap to the side links! **E6.35.1/E6.35.2 = 1mm / E6.35.5 = 13mm**
As standard separators are fitted every 2nd e-chain® link!

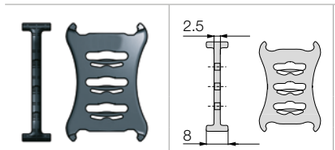

Part No. **Standard separator**
unassembled **E6.35.1**
assembled **E6.35.1.1**

For all applications
Standard separator with a wide base for maximum holding force.

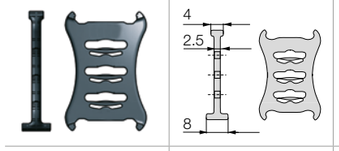

Part No. **Separator, narrow top**
unassembled **E6.35.2**
assembled **E6.35.2.1**

For even faster installation
Wide on one side for high holding force, narrow on opposite side for easy cable fitting.

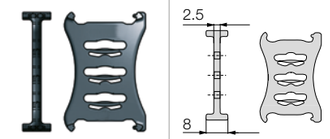

Part No. **Notch separator**
unassembled **E6.35.5**
assembled **E6.35.5.1**

Locks securely in preset increments
Notch separator for exact positioning. Recommended for side-mounted applications.

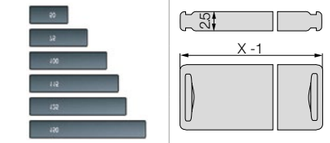

Part No. **Shelf**
unassembled **2300.X**
assembled **2310.X**

Horizontal separation
Full-width shelf locks securely into separators at both ends, giving a fixed width. Can be used as full-width or modular shelving.

Width [mm]	Part No. unassembled	Part No. assembled
015	**2300.015**	**2310.015**
025	**2300.025**	**2310.025**
030	**2300.030**	**2310.030**
038	**2300.038**	**2310.038**
040	**2300.040**	**2310.040**
050	**2300.050**	**2310.050**

Width [mm]	Part No. unassembled	Part No. assembled
057	**2300.057**	**2310.057**
060	**2300.060**	**2310.060**
062	**2300.062**	**2310.062**
065	**2300.065**	**2310.065**
070	**2300.070**	**2310.070**
075	**2300.075**	**2310.075**

Width [mm]	Part No. unassembled	Part No. assembled
077	**2300.077**	**2310.077**
080	**2300.080**	**2310.080**
087	**2300.087**	**2310.087**
090	**2300.090**	**2310.090**
100	**2300.100**	**2310.100**
103	**2300.103**	**2310.103**

Width [mm]	Part No. unassembled	Part No. assembled
110	**2300.110**	**2310.110**
120	**2300.120**	**2310.120**
125	**2300.125**	**2310.125**

Available from stock
Upon request

Product range

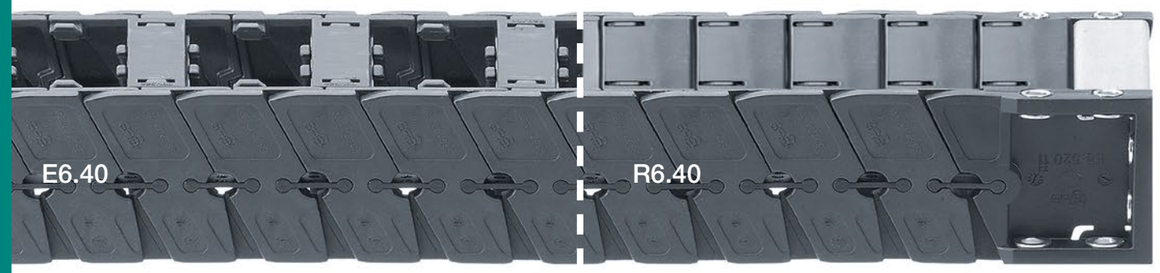

Part No. e-chains® cross-bars removable	Part No. e-tubes lids removable	*Bi* [mm]	*Ba* [mm]	E6.40 [kg/m]	R6.40 [kg/m]
E6.40.040.□.0	–	40	60	≈ 1.29	–
E6.40.050.□.0	–	50	70	≈ 1.33	–
E6.40.052.□.0	–	52	72	≈ 1.34	–
E6.40.062.□.0	R6.40.062.□.0	62	82	≈ 1.38	≈ 1.59
E6.40.070.□.0	–	70	90	≈ 1.41	–
E6.40.075.□.0	–	75	95	≈ 1.43	–
E6.40.087.□.0	–	87	107	≈ 1.48	–
E6.40.100.□.0	–	100	120	≈ 1.53	–

Part No. e-chains® cross-bars removable	Part No. e-tubes lids removable	*Bi* [mm]	*Ba* [mm]	E6.40 [kg/m]	R6.40 [kg/m]
E6.40.125.□.0	–	125	145	≈ 1.63	–
E6.40.150.□.0	–	150	170	≈ 1.73	–
E6.40.175.□.0	–	175	195	≈ 1.83	–
E6.40.200.□.0	–	200	220	≈ 1.93	–
E6.40.225.□.0	–	225	245	≈ 2.02	–
E6.40.250.□.0	–	250	270	≈ 2.12	–
E6.40.275.□.0	–	275	295	≈ 2.22	–
E6.40.300.□.0	–	300	320	≈ 2.32	–

Available bend radii *R* [mm] | 063 | 075 | 100 | 125 | 150 | 200 |

Order key

E6.40.062.100.0

Series / Type	Inner height	Width index	Bend radius	Colour index

Order example:
Complete Part No. with the required radius □ *R*. Example:
E6.40.062.100.0 = crossbars removable along the inner and outer radius
R6.40.062.100.0 = lids removable along the inner and outer radii
Order index for colour options ▶ **www.igus.eu/info-colours**

Available from stock
Upon request

Unsupported applications | Short travels

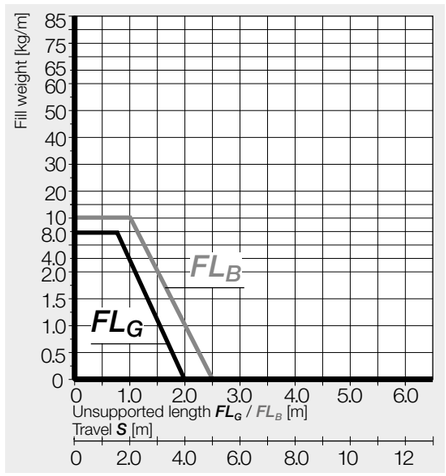

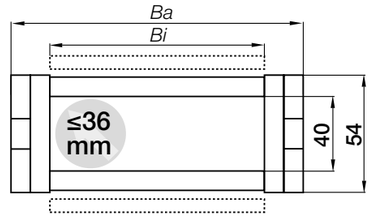

Inner height [mm]	40
Pitch [mm]	27.8
Links/m [pc.]	36
corresponds to [mm]	1,001
e-chain® length	$L_K = S/2 + K$

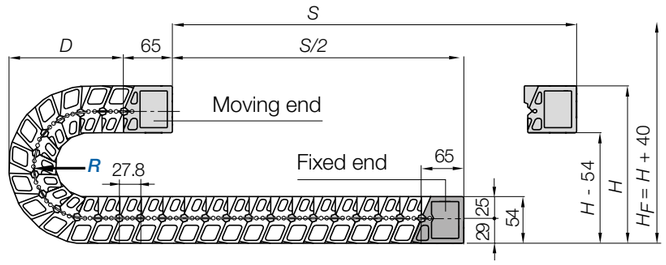

R	063	075	100	125	150	200
H	224	248	298	348	398	498
D	134	146	171	196	221	271
K	255	295	370	450	530	685

The required clearance height: $H_F = H + 40$mm (with 2.0kg/m fill weight)

Note: If a gliding application is required for a long travel, please consult igus®.

Available from stock
Upon request

KMA mounting brackets | Attachment from any side | Pivoting

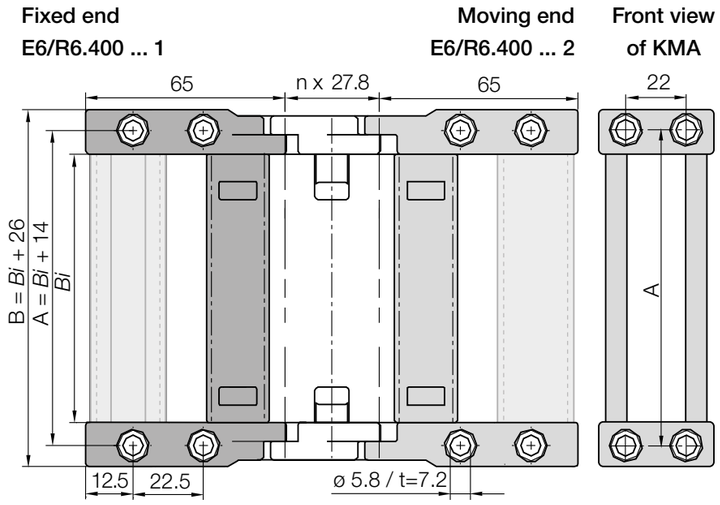

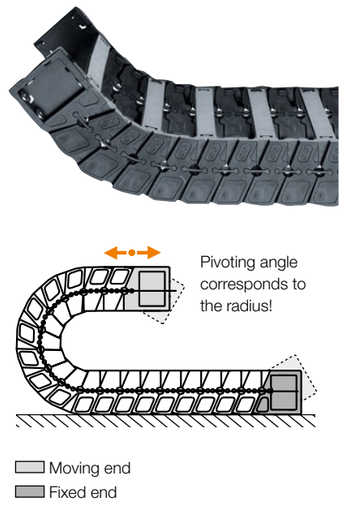

Width index	Full set KMA, pivoting				
	Part No. e-chains®	Part No. e-tubes	A [mm]	B [mm]	*Bi* [mm]
040.	E6.400.040.12.☐	–	54	66	40
050.	E6.400.050.12.☐	–	64	76	50
052.	E6.400.052.12.☐	–	66	78	52
062.	E6.400.062.12.☐	R6.400.062.12.☐	76	88	62
070.	E6.400.070.12.☐	–	84	96	70
075.	E6.400.075.12.☐	–	89	101	75
087.	E6.400.087.12.☐	–	101	113	87
100.	E6.400.100.12.☐	–	114	126	100

Width index	Full set KMA, pivoting				
	Part No. e-chains®	Part No. e-tubes	A [mm]	B [mm]	*Bi* [mm]
125.	E6.400.125.12.☐	–	139	151	125
150.	E6.400.150.12.☐	–	154	176	150
175.	E6.400.175.12.☐	–	189	201	175
200.	E6.400.200.12.☐	–	214	226	200
225.	E6.400.225.12.☐	–	239	251	225
250.	E6.400.250.12.☐	–	264	276	250
275.	E6.400.275.12.☐	–	289	301	275
300.	E6.400.300.12.☐	–	314	326	300

(KMA = polymer metal mounting bracket)

Order key

E6.400.100.12 .C.A2

Series	Width index	Full set	C-profile option	Pre-fitted

Note: Possible orientations for KMA mounting brackets. For mounting brackets pre-fitted **without strain relief**, please add index **.A**. For types pre-fitted **with strain relief** please add index **.A1**, **.A2**, **.A3** or **.A4**.



For the C-profile option please add index **.C**.

Available from stock
Upon request

Interior separation | Increase cable service life (only for e-chains®, for e-tubes ▶ next page)

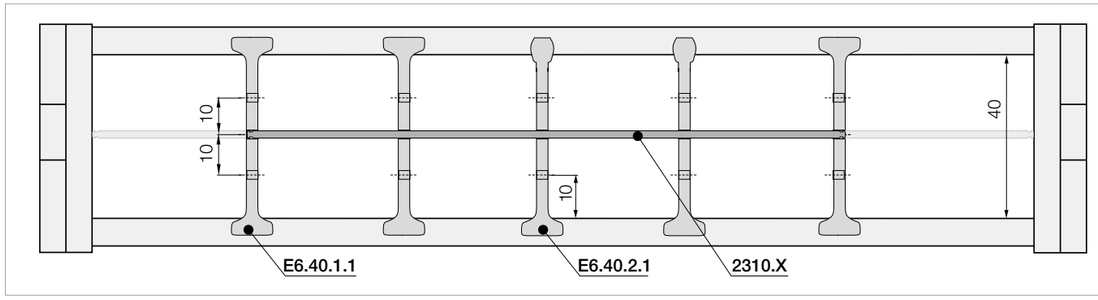

No lateral gap to side links necessary.
As standard separators are fitted every 2nd e-chain® link!

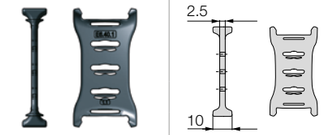

Part No.
Standard separator
unassembled **E6.40.1**
assembled **E6.40.1.1**

For all applications

Standard separator with a wide base for maximum holding force.

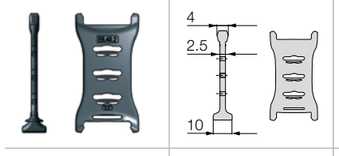

Part No.
Separator, narrow top
unassembled **E6.40.2**
assembled **E6.40.2.1**

For even faster installation

Wide on one side for high holding force, narrow on opposite side for easy cable fitting.

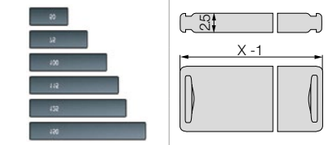

Part No.
Shelf
unassembled **2300.X**
assembled **2310.X**

Horizontal separation

Full-width shelf locks securely into separators at both ends, giving a fixed width. Can be used as full-width or modular shelving.

Width [mm]	Part No. unassembled	Part No. assembled
015	**2300.015**	**2310.015**
025	**2300.025**	**2310.025**
030	**2300.030**	**2310.030**
038	**2300.038**	**2310.038**
040	**2300.040**	**2310.040**
050	**2300.050**	**2310.050**

Width [mm]	Part No. unassembled	Part No. assembled
057	**2300.057**	**2310.057**
060	**2300.060**	**2310.060**
062	**2300.062**	**2310.062**
065	**2300.065**	**2310.065**
070	**2300.070**	**2310.070**
075	**2300.075**	**2310.075**

Width [mm]	Part No. unassembled	Part No. assembled
077	**2300.077**	**2310.077**
080	**2300.080**	**2310.080**
087	**2300.087**	**2310.087**
090	**2300.090**	**2310.090**
100	**2300.100**	**2310.100**
103	**2300.103**	**2310.103**

Width [mm]	Part No. unassembled	Part No. assembled
110	**2300.110**	**2310.110**
120	**2300.120**	**2310.120**
125	**2300.125**	**2310.125**

Available from stock
Upon request

Interior separation (only for e-tubes, for e-chains® ▶ previous page)

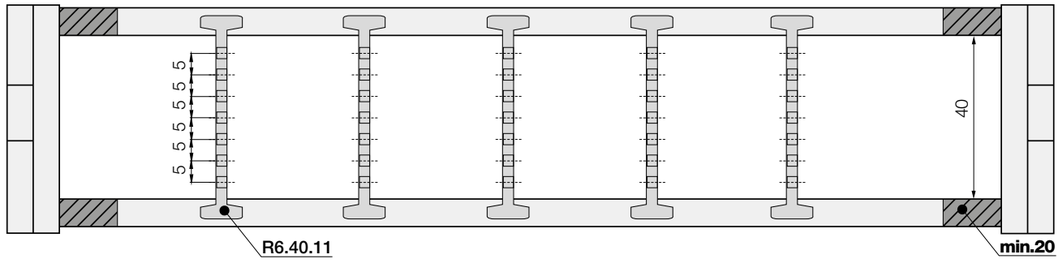

Note: Please be aware of the minimum lateral gap to the side links! **e-tubes: 20mm**
As standard separators are fitted every 2nd e-chain® link!

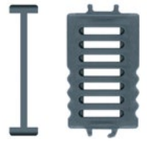

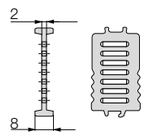

Part No.	
Separator for e-tubes	
unassembled	**R6.40.1**
assembled	**R6.40.1.1**

Separator for e-tubes

Notches on the separator indicate the clamping side of the separator. The notches on this separator mark the side that fixes to the lid.



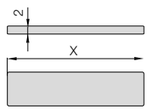

Part No.	
Full-width shelf	
unassembled	**110.X**
assembled	**111.X**

Horizontal separation

Full-width shelf locks securely into separators at both ends, giving a fixed width. Can be used as full-width or modular shelving.

Width [mm]	Part No. unassembled	Part No. assembled	Width [mm]	Part No. unassembled	Part No. assembled	Width [mm]	Part No. unassembled	Part No. assembled	Width [mm]	Part No. unassembled	Part No. assembled
30	**110.30**	**111.30**	60	**110.60**	**111.60**	90	**110.90**	**111.90**	120	**110.120**	**111.120**
40	**110.40**	**111.40**	70	**110.70**	**111.70**	100	**110.100**	**111.100**			
50	**110.50**	**111.50**	80	**110.80**	**111.80**	110	**110.110**	**111.110**			

Available from stock
Upon request

Product range

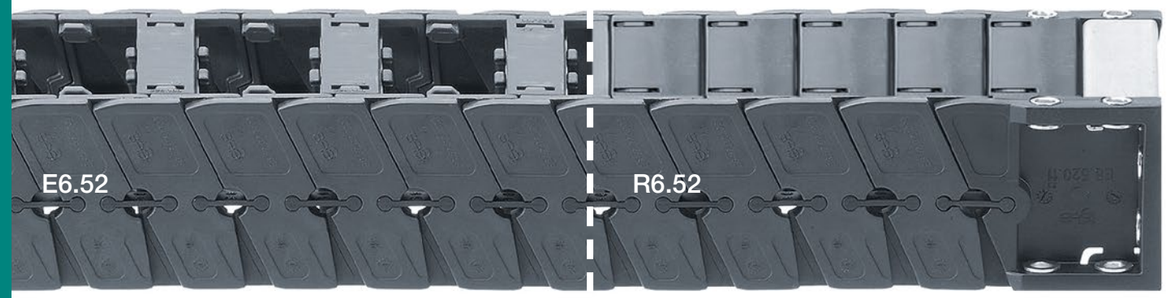

Part No. e-chains® cross-bars removable	Part No. e-tubes lids removable	*Bi* [mm]	*Ba* [mm]	E6.52 [kg/m]	R6.52 [kg/m]
E6.52.040.□□.0	–	40	64	≈ 1.76	≈ 1.78
E6.52.050.□□.0	R6.52.050.□□.0	50	74	≈ 1.80	≈ 1.89
E6.52.052.□□.0	–	52	66	≈ 1.81	≈ 1.92
E6.52.062.□□.0	–	62	86	≈ 1.84	≈ 1.97
E6.52.070.□□.0	–	70	94	≈ 1.87	≈ 2.07
E6.52.075.□□.0	R6.52.075.□□.0	75	99	≈ 1.89	≈ 2.12
E6.52.087.□□.0	–	87	111	≈ 1.94	≈ 2.21
E6.52.100.□□.0	R6.52.100.□□.0	100	124	≈ 1.98	≈ 2.35
E6.52.125.□□.0	R6.52.125.□□.0	125	149	≈ 2.07	≈ 2.57
E6.52.150.□□.0	R6.52.150.□□.0	150	174	≈ 2.17	≈ 2.80
E6.52.175.□□.0	R6.52.175.□□.0	175	199	≈ 2.26	≈ 3.03
E6.52.200.□□.0	R6.52.200.□□.0	200	224	≈ 2.36	≈ 3.25
E6.52.225.□□.0	–	225	249	≈ 2.45	≈ 3.46
E6.52.250.□□.0	–	250	274	≈ 2.54	≈ 3.68
E6.52.275.□□.0	–	275	299	≈ 2.64	≈ 3.92
E6.52.300.□□.0	–	300	324	≈ 2.73	≈ 4.15

Available bend radii *R* [mm] | 075 | 100 | 125 | 150 | 200 | 250 |

Order key

E6.52.100.100.0

Series / Type	Inner height	Width index	Bend radius	Colour index

Order example:
Complete Part No. with the required radius □□. Example:
E6.52.100.100.0 = crossbars removable along the inner and outer radius
R6.52.100.100.0 = lids removable along the inner and outer radii
Order index for colour options ▶ **www.igus.eu/info-colours**

Available from stock
Upon request

Unsupported applications | Short travels

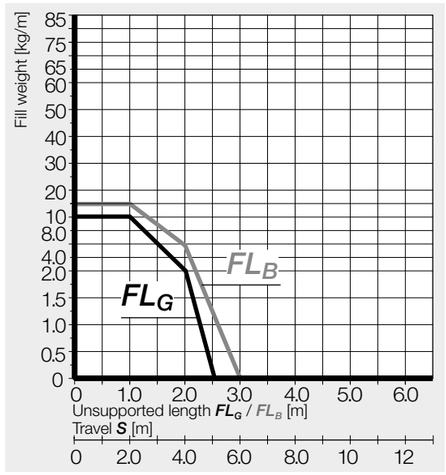

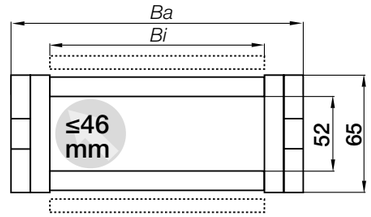

Inner height [mm]	52
Pitch [mm]	30
Links/m [pc.]	34
corresponds to [mm]	1,020
e-chain® length	$L_K = S/2 + K$

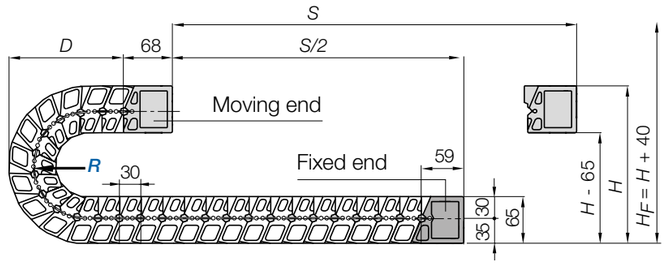

R	075	100	125	150	200	250
H	270	320	365	420	520	620
D	155	180	203	230	280	330
K	300	375	455	535	690	850

The required clearance height: $H_F = H + 40$mm (with 2.0kg/m fill weight)

Note: If a gliding application is required for a long travel, please consult igus®.

Available from stock
Upon request

KMA mounting brackets | Attachment from any side | Pivoting

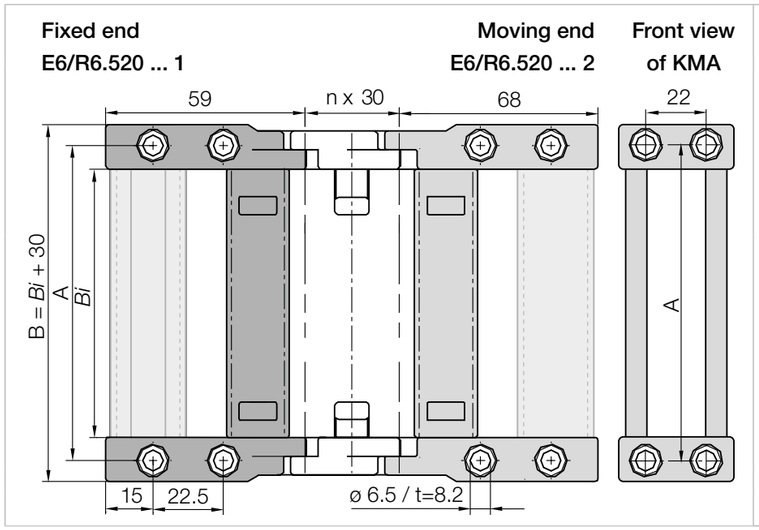

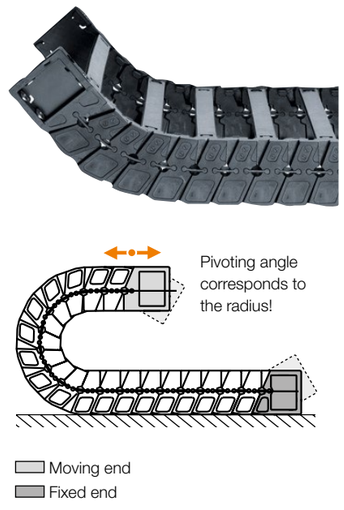

Width index	Full set KMA, pivoting				
	Part No. e-chains®	Part No. e-tubes	A [mm]	B [mm]	*Bi* [mm]
040.	E6.520.040.12.☐	–	56	70	40
050.	E6.520.050.12.☐	R6.520.050.12.☐	66	80	50
052.	E6.520.052.12.☐	–	68	82	52
062.	E6.520.062.12.☐	–	78	92	62
070.	E6.520.070.12.☐	–	86	100	70
075.	E6.520.075.12.☐	R6.520.075.12.☐	91	105	75
087.	E6.520.087.12.☐	–	103	117	87
100.	E6.520.100.12.☐	R6.520.100.12.☐	116	130	100

Width index	Full set KMA, pivoting				
	Part No. e-chains®	Part No. e-tubes	A [mm]	B [mm]	*Bi* [mm]
125.	E6.520.125.12.☐	R6.520.125.12.☐	141	155	125
150.	E6.520.150.12.☐	R6.520.150.12.☐	166	180	150
175.	E6.520.175.12.☐	R6.520.175.12.☐	191	205	175
200.	E6.520.200.12.☐	R6.520.200.12.☐	216	230	200
225.	E6.520.225.12.☐	–	241	255	225
250.	E6.520.250.12.☐	–	266	280	250
275.	E6.520.275.12.☐	–	291	300	275
300.	E6.400.300.12.☐	–	316	330	300

(KMA = polymer metal mounting bracket)

Order key

E6.520.100.12 .C .A2

Series | Width index | Full set | C-profile option | Pre-fitted

Note: Possible orientations for KMA mounting brackets. For mounting brackets pre-fitted **without strain relief**, please add index **.A**. For types pre-fitted **with strain relief** please add index **.A1**, **.A2**, **.A3** or **.A4**.



For the C-profile option please add index **.C**.

Available from stock
Upon request

Interior separation | Increase cable service life (only for e-chains®)

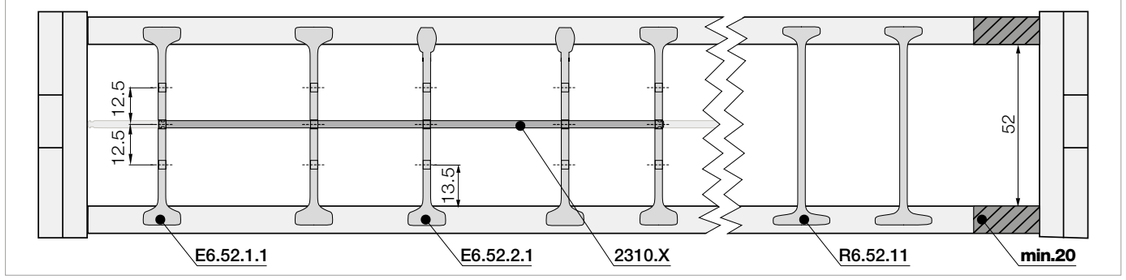

Note for e-tubes: Please be aware of the minimum lateral gap to the side links! **20mm**
e-chains®: No lateral gap to side links necessary.
As standard separators are fitted every 2nd e-chain® link!

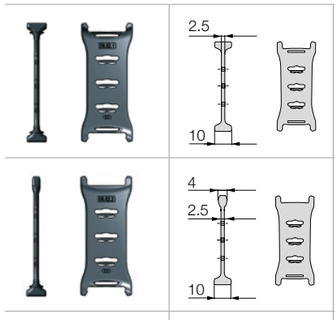

Part No. Standard separator	
unassembled	**E6.52.1**
assembled	**E6.52.1.1**

For all applications

Standard separator with a wide base for maximum holding force.

Part No. Separator, narrow top	
unassembled	**E6.52.2**
assembled	**E6.52.2.1**

For even faster installation

Wide on one side for high holding force, narrow on opposite side for easy cable fitting.

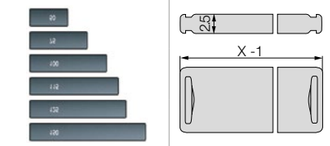

Part No. Shelf	
unassembled	**2300.X**
assembled	**2310.X**

Horizontal separation

Full-width shelf locks securely into separators at both ends, giving a fixed width. Can be used as full-width or modular shelving.

Width [mm]	Part No. unassembled	Part No. assembled
015	**2300.015**	**2310.015**
025	**2300.025**	**2310.025**
030	**2300.030**	**2310.030**
038	**2300.038**	**2310.038**
040	**2300.040**	**2310.040**
050	**2300.050**	**2310.050**

Width [mm]	Part No. unassembled	Part No. assembled
057	**2300.057**	**2310.057**
060	**2300.060**	**2310.060**
062	**2300.062**	**2310.062**
065	**2300.065**	**2310.065**
070	**2300.070**	**2310.070**
075	**2300.075**	**2310.075**

Width [mm]	Part No. unassembled	Part No. assembled
077	**2300.077**	**2310.077**
080	**2300.080**	**2310.080**
087	**2300.087**	**2310.087**
090	**2300.090**	**2310.090**
100	**2300.100**	**2310.100**
103	**2300.103**	**2310.103**

Width [mm]	Part No. unassembled	Part No. assembled
110	**2300.110**	**2310.110**
120	**2300.120**	**2310.120**
125	**2300.125**	**2310.125**

Interior separation (only for e-tubes)

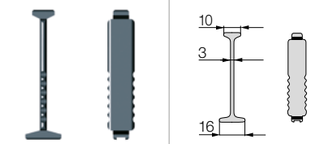

Part No. Separator for e-tubes	
unassembled	**R6.52.1**
assembled	**R6.52.1.1**

Separator for e-tubes

Notches on the separator indicate the clamping side of the separator. The notches on this separator mark the side that fixes to the lid.

Available from stock
Upon request

Product range



Part No. e-chains® crossbars removable	Bi [mm]	Ba [mm]	E6.62 [kg/m]
E6.62.05. ☐.0	50	86	≈ 3.22
E6.62.06. ☐.0	68	104	≈ 3.28
E6.62.07. ☐.0	75	111	≈ 3.31
E6.62.087. ☐.0	87	123	≈ 3.35
E6.62.097. ☐.0	97	133	≈ 3.38
E6.62.10. ☐.0	100	136	≈ 3.39
E6.62.11. ☐.0	108	144	≈ 3.42
E6.62.112. ☐.0	112	148	≈ 3.43
E6.62.12. ☐.0	125	161	≈ 3.48
E6.62.137. ☐.0	137	173	≈ 3.52
E6.62.15. ☐.0	150	186	≈ 3.57
E6.62.162. ☐.0	162	198	≈ 3.61
E6.62.17. ☐.0	168	204	≈ 3.63
E6.62.18. ☐.0	175	211	≈ 3.65
E6.62.187. ☐.0	187	223	≈ 3.69
E6.62.20. ☐.0	200	236	≈ 3.74

Part No. e-chains® crossbars removable	Bi [mm]	Ba [mm]	E6.62 [kg/m]
E6.62.212. ☐.0	212	248	≈ 3.78
E6.62.23. ☐.0	225	261	≈ 3.83
E6.62.237. ☐.0	237	273	≈ 3.87
E6.62.25. ☐.0	250	286	≈ 3.91
E6.62.262. ☐.0	262	298	≈ 3.95
E6.62.28. ☐.0	275	311	≈ 4.00
E6.62.29. ☐.0	287	323	≈ 4.04
E6.62.30. ☐.0	300	336	≈ 4.09
E6.62.312. ☐.0	312	348	≈ 4.13
E6.62.325. ☐.0	325	361	≈ 4.17
E6.62.337. ☐.0	337	373	≈ 4.21
E6.62.350. ☐.0	350	386	≈ 4.26
E6.62.362. ☐.0	362	398	≈ 4.30
E6.62.375. ☐.0	375	411	≈ 4.35
E6.62.387. ☐.0	387	423	≈ 4.39
E6.62.400. ☐.0	400	436	≈ 4.43

Available bend radii *R* [mm] | 115 | 150 | 200 | 250 | 300 | 350 |

Order key

E6.62.10.250.0

Series / Type | Inner height | Width index | Bend radius | Colour index

Order example:
Complete Part No. with the required radius ☐*R*. Example:
E6.62.10.250.0 = crossbars removable along the inner and outer radius
Order index for colour options ▶ **www.igus.eu/info-colours**

Available from stock
Upon request

Unsupported applications | Short travels

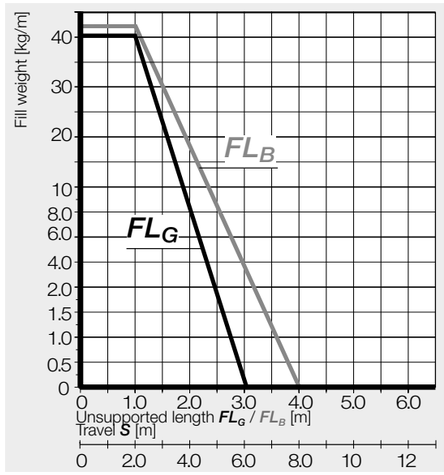

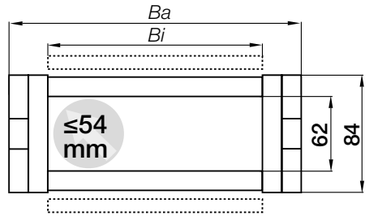

Inner height [mm]	62
Pitch [mm]	50
Links/m [pc.]	20
corresponds to [mm]	1,000
e-chain® length	$L_K = S/2 + K$

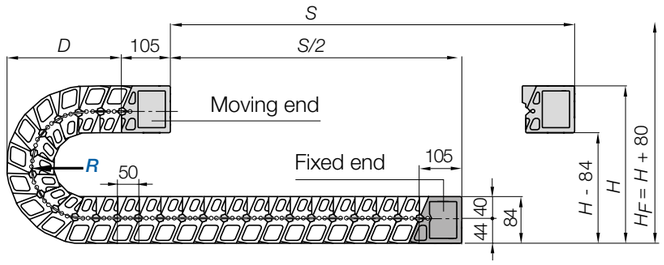

R	115	150	200	250	300	350
H	388	458	558	658	758	858
D	234	269	319	369	419	469
K	465	575	730	890	1,045	1,200

The required clearance height: $H_F = H + 80$mm (with 2.0kg/m fill weight)

Note: If a gliding application is required for a long travel, please consult igus®.

Available from stock
Upon request

KMA mounting brackets | Attachment from any side | Pivoting

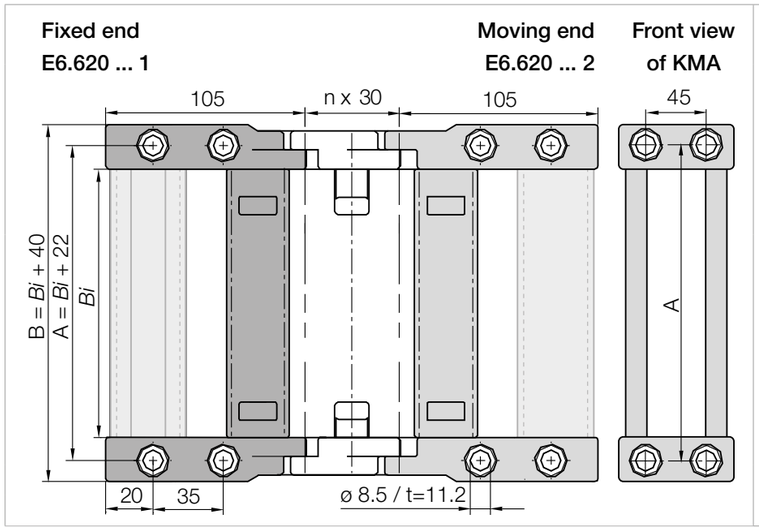

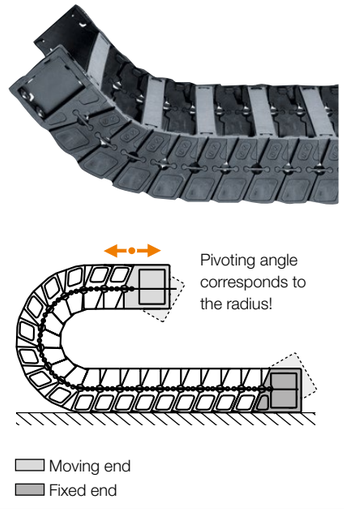

Width index	KMA full set Part No. pivoting	A [mm]	B [mm]	Bi [mm]
05.	E6.620.05. 12.☐	72	90	50
06.	E6.620.06. 12.☐	90	108	68
07.	E6.620.07. 12.☐	97	115	75
087.	E6.620.087.12.☐	109	127	87
097.	E6.620.097.12.☐	119	137	97
10.	E6.620.10. 12.☐	122	140	100
11.	E6.620.11. 12.☐	130	148	108
112.	E6.620.112.12.☐	134	152	112
12.	E6.620.12. 12.☐	147	165	125
137.	E6.620.137.12.☐	159	177	137
15.	E6.620.15. 12.☐	172	190	150
162.	E6.620.162.12.☐	184	202	162
17.	E6.620.17. 12.☐	190	208	168
18.	E6.620.18. 12.☐	197	215	175
187.	E6.620.187.12.☐	209	227	187
20.	E6.620.20. 12.☐	222	240	200

Width index	KMA full set Part No. pivoting	A [mm]	B [mm]	Bi [mm]
212.	E6.620.212.12.☐	234	252	212
23.	E6.620.23. 12.☐	247	265	225
237.	E6.620.237.12.☐	259	277	237
25.	E6.620.25. 12.☐	272	290	250
262.	E6.620.262.12.☐	284	302	262
28.	E6.620.28. 12.☐	297	315	275
29.	E6.620.29. 12.☐	309	327	287
30.	E6.620.30. 12.☐	322	340	300
312	E6.620.312.12.☐	334	352	312
325.	E6.620.325.12.☐	347	365	325
337.	E6.620.337.12.☐	359	377	337
350.	E6.620.350.12.☐	372	390	350
362	E6.620.362.12.☐	384	402	362
375.	E6.620.375.12.☐	397	415	375
387.	E6.620.387.12.☐	409	427	387
400.	E6.620.400.12.☐	422	440	400

(KMA = polymer metal mounting bracket)

Order key

E6.620.10.12.C.A2

Series | Width index | Full set | C-profile option | Pre-fitted

Note: Possible orientations for KMA mounting brackets. For mounting brackets pre-fitted **without strain relief**, please add index **.A**. For types pre-fitted **with strain relief** please add index **.A1**, **.A2**, **.A3** or **.A4**.



For the C-profile option please add index **.C**.

Interior separation | Increase cable service life

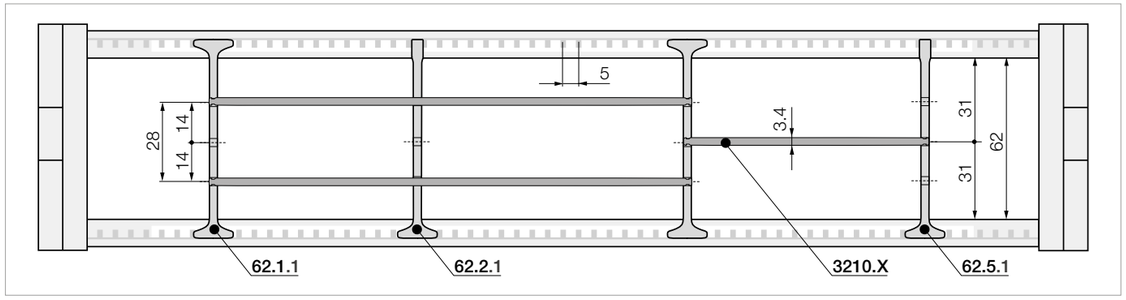

No lateral gap to side links necessary.
As standard separators are fitted every 2nd e-chain® link!

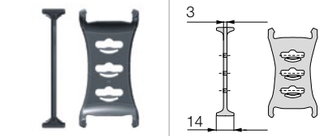

Part No.
Standard separator
unassembled **62.1**
assembled **62.1.1**

For all applications

Standard separator with a wide base for maximum holding force.

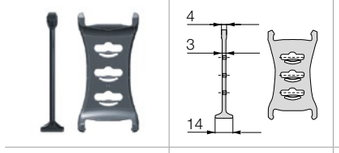

Part No.
Separator, narrow top
unassembled **62.2**
assembled **62.2.1**

For even faster installation

Wide on one side for high holding force, narrow on opposite side for easy cable fitting.

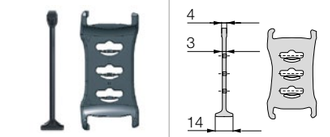

Part No.
Notch separator*
unassembled **62.5**
assembled **62.5.1**

Locks securely in preset increments

Notch separator* for exact positioning. Recommended for side-mounted applications. *Suitable from ***Bi*** 75

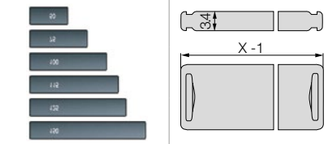

Part No.
Shelf
unassembled **3200.X**
assembled **3210.X**

Horizontal separation

Full-width shelf locks securely into separators at both ends, giving a fixed width. Can be used as full-width or modular shelving.

Width [mm]	Part No. unassembled	Part No. assembled
050	3200.050	3210.050
075	3200.075	3210.075
100	3200.100	3210.100

Width [mm]	Part No. unassembled	Part No. assembled
115	3200.115	3210.115
125	3200.125	3210.125
150	3200.150	3210.150

Width [mm]	Part No. unassembled	Part No. assembled
175	3200.175	3210.175
200	3200.200	3210.200
225	3200.225	3210.225

Width [mm]	Part No. unassembled	Part No. assembled
250	3200.250	3210.250

Available from stock
Upon request

Interior separation | To allow faster filling

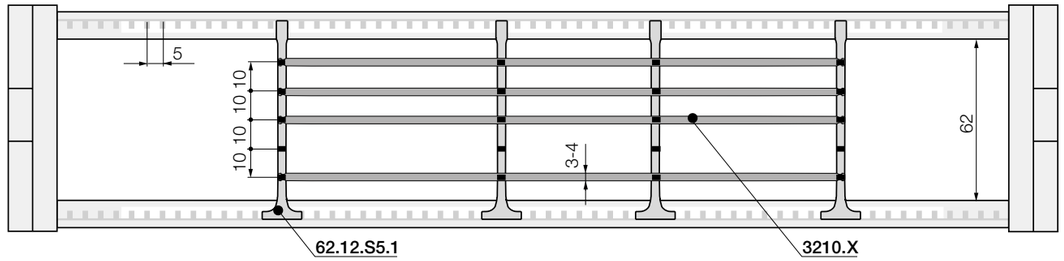

No lateral gap to side links necessary.
As standard separators are fitted every 2nd e-chain® link!



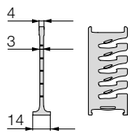

Part No.	
Lean separator	
unassembled	**62.12.S5**
assembled	**62.12.S5.1**

Lean separators[1)]

Quick fitting of shelves in several layers. Enables extremely fast replacement of individual cables in very full e-chains®. Only suitable for e-chains®.

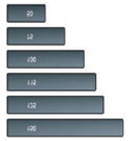

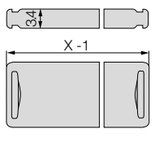

Part No.	
Shelf	
unassembled	**3200.X**
assembled	**3210.X**

Horizontal separation

Full-width shelf locks securely into separators at both ends, giving a fixed width. Can be used as full-width or modular shelving.

Width [mm]	Part No. unassembled	Part No. assembled
050	**3200.050**	**3210.050**
075	**3200.075**	**3210.075**
100	**3200.100**	**3210.100**

Width [mm]	Part No. unassembled	Part No. assembled
115	**3200.115**	**3210.115**
125	**3200.125**	**3210.125**
150	**3200.150**	**3210.150**

Width [mm]	Part No. unassembled	Part No. assembled
175	**3200.175**	**3210.175**
200	**3200.200**	**3210.200**
225	**3200.225**	**3210.225**

Width [mm]	Part No. unassembled	Part No. assembled
250	**3200.250**	**3210.250**



Lean separator for even faster filling: quickly insert several layers of cables into the e-chain® and reduce the installation time by up to 50%. Measured on a 4m long e-chain® fitted with 12 cables. **1) Note: Please combine a maximum of four lean separators with one shelf. Not suitable for side-mounted e-chains®!**

Available from stock
Upon request

Product range



Part No. e-chains® crossbars removable	*Bi* [mm]	*Ba* [mm]	E6.80L [kg/m]
E6.80L.08.□.0	87	115	≈ 3.28
E6.80L.10.□.0	100	128	≈ 3.33
E6.80L.11.□.0	112	140	≈ 3.38
E6.80L.12.□.0	125	153	≈ 3.43
E6.80L.13.□.0	137	165	≈ 3.49
E6.80L.15.□.0	150	178	≈ 3.55
E6.80L.16.□.0	162	190	≈ 3.61
E6.80L.17.□.0	175	203	≈ 3.67
E6.80L.18.□.0	187	215	≈ 3.73
E6.80L.20.□.0	200	228	≈ 3.79
E6.80L.21.□.0	212	240	≈ 3.85
E6.80L.22.□.0	225	253	≈ 3.91
E6.80L.23.□.0	237	265	≈ 3.97
E6.80L.25.□.0	250	278	≈ 4.02
E6.80L.26.□.0	262	290	≈ 4.09
E6.80L.27.□.0	275	303	≈ 4.14
E6.80L.28.□.0	287	315	≈ 4.20
E6.80L.30.□.0	300	328	≈ 4.26
E6.80L.31.□.0	312	340	≈ 4.32

Part No. e-chains® crossbars removable	*Bi* [mm]	*Ba* [mm]	E6.80L [kg/m]
E6.80L.32.□.0	325	353	≈ 4.38
E6.80L.33.□.0	337	365	≈ 4.44
E6.80L.35.□.0	350	378	≈ 4.50
E6.80L.36.□.0	362	390	≈ 4.56
E6.80L.37.□.0	375	403	≈ 4.62
E6.80L.38.□.0	387	415	≈ 4.68
E6.80L.40.□.0	400	428	≈ 4.74
E6.80L.41.□.0	412	440	≈ 4.80
E6.80L.42.□.0	425	453	≈ 4.85
E6.80L.43.□.0	437	465	≈ 4.92
E6.80L.45.□.0	450	478	≈ 5.03
E6.80L.46.□.0	462	490	≈ 5.09
E6.80L.47.□.0	475	503	≈ 5.15
E6.80L.48.□.0	487	515	≈ 5.21
E6.80L.50.□.0	500	528	≈ 5.27
E6.80L.51.□.0	512	540	≈ 5.33
E6.80L.52.□.0	525	553	≈ 5.39
E6.80L.53.□.0	537	565	≈ 5.45
E6.80L.55.□.0	550	578	≈ 5.51

Available bend radii *R* [mm] | 150 | 175 | 200 | 250 | 300 |

Order key

E6.80L.10.175.0

Series / Type | Inner height | Width index | Bend radius | Colour index

Order example:
Complete Part No. with the required radius □ *R*. Example:
E6.80L.10.175.0 = crossbars removable along the inner and outer radius
Order index for colour options ▶ **www.igus.eu/info-colours**

Unsupported applications | Short travels

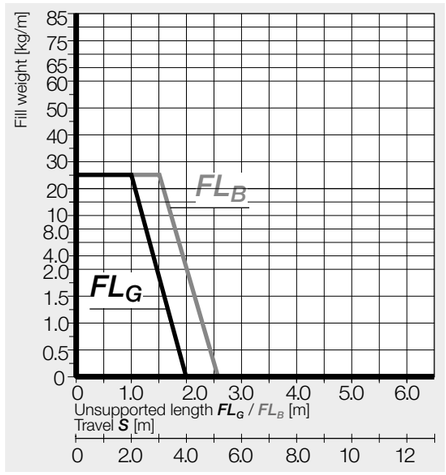

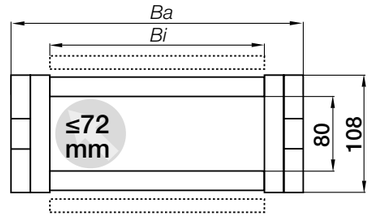

Inner height [mm]	80
Pitch [mm]	65
Links/m [pc.]	16
corresponds to [mm]	1,040
e-chain® length	$L_K = S/2 + K$

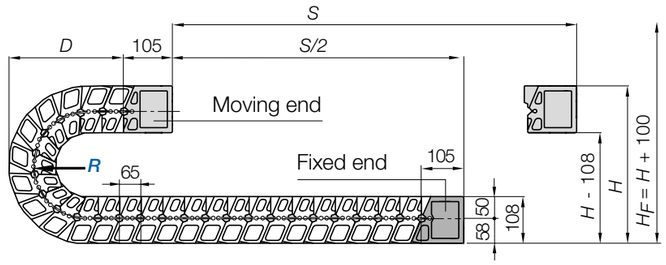

R	150	175	200	250	300
H	516	566	616	716	816
D	306	331	356	406	456
K	605	680	760	915	1,075

The required clearance height: $H_F = H$ **+ 100mm** (with 5.0kg/m fill weight)

Note: If a gliding application is required for a long travel, please consult igus®.

Available from stock
Upon request

KMA mounting brackets | Attachment from any side | Pivoting

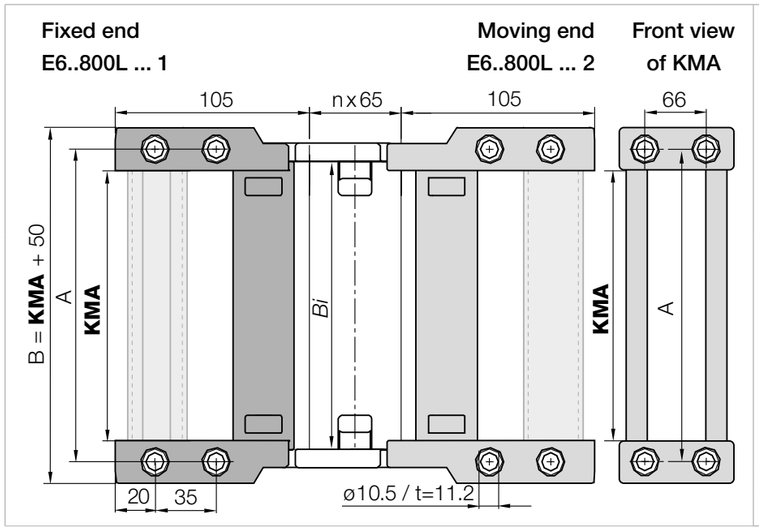

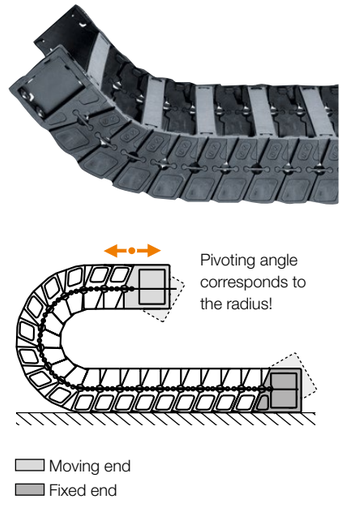

Width index	KMA full set Part No. pivoting	A [mm]	KMA [mm]
08.	E6.800L.08. 12.□	103	75
10.	E6.800L.10. 12.□	115	87
11.	E6.800L.11. 12.□	128	100
12.	E6.800L.12. 12.□	140	112
13.	E6.800L.13. 12.□	153	125
15.	E6.800L.15. 12.□	165	137
16.	E6.800L.16. 12.□	178	150
17.	E6.800L.17. 12.□	190	162
18.	E6.800L.18. 12.□	203	175
20.	E6.800L.20. 12.□	215	187
21.	E6.800L.21. 12.□	228	200
22.	E6.800L.22. 12.□	240	212
23.	E6.800L.23. 12.□	253	225
25.	E6.800L.25. 12.□	265	237
26.	E6.800L.26. 12.□	278	250
27.	E6.800L.27. 12.□	290	262
28.	E6.800L.28. 12.□	303	275
30.	E6.800L.30. 12.□	315	287
31.	E6.800L.31. 12.□	328	300

Width index	KMA full set Part No. pivoting	A [mm]	KMA [mm]
32.	E6.800L.32. 12.□	340	312
33.	E6.800L.33. 12.□	353	325
35.	E6.800L.35. 12.□	365	337
36.	E6.800L.36. 12.□	378	350
37.	E6.800L.37. 12.□	390	362
38.	E6.800L.38. 12.□	403	375
40.	E6.800L.40. 12.□	415	387
41.	E6.800L.41. 12.□	428	400
42.	E6.800L.42. 12.□	440	412
43.	E6.800L.43. 12.□	453	425
45.	E6.800L.45. 12.□	465	437
46.	E6.800L.46. 12.□	478	450
47.	E6.800L.47. 12.□	490	462
48.	E6.800L.48. 12.□	503	475
50.	E6.800L.50. 12.□	515	487
51.	E6.800L.51. 12.□	528	500
52.	E6.800L.52. 12.□	540	512
53.	E6.800L.53. 12.□	553	525
55.	E6.800L.55. 12.□	565	537

(KMA = polymer metal mounting bracket)

Order key

E6.800L.10 .12 .C .A2

Series | Width index | Full set | C-profile option | Pre-fitted

Note: Possible orientations for KMA mounting brackets. For mounting brackets pre-fitted **without strain relief**, please add index **.A**. For types pre-fitted **with strain relief** please add index **.A1**, **.A2**, **.A3** or **.A4**.



For the C-profile option please add index **.C**.

Interior separation | Increase cable service life

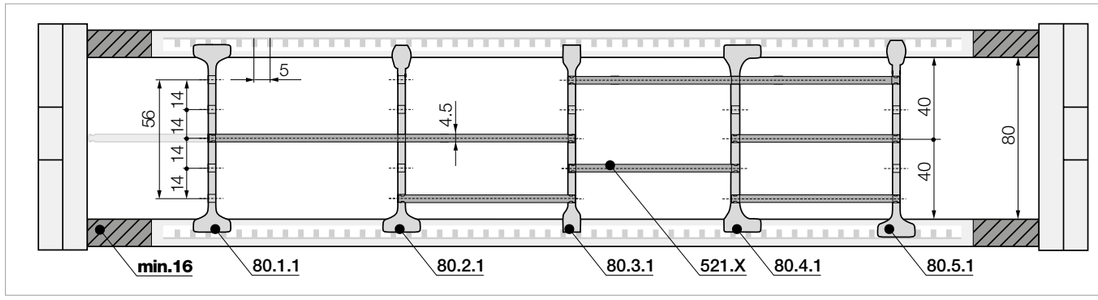

Note: Please be aware of the minimum lateral gap to the side links! **e-chain®: =16mm**
As standard separators are fitted every 2nd e-chain® link!



Part No. Standard separator	
unassembled	**80.1**
assembled	**80.1.1**

For all applications

Standard separator with a wide base for maximum holding force.



Part No. Separator, narrow top	
unassembled	**80.2**
assembled	**80.2.1**

For even faster installation

Wide on one side for high holding force, narrow on opposite side for easy cable fitting.



Part No. Separator, narrow	
unassembled	**80.3**
assembled	**80.3.1**

For a large number of thin cables

Separator with a narrow base for a large number of thin cables side by side. Saves space.



Part No. Separator, asymmetrical	
unassembled	**80.4**
assembled	**80.4.1**

For side-mounted applications

Asymmetrical separator, for defined gap distance. No additional spacers required.



Part No. Notch separator	
unassembled	**80.5**
assembled	**80.5.1**

Locks securely in preset increments

Notch separator for exact positioning. Recommended for side-mounted applications.



Part No. Shelf	
unassembled	**520.X**
assembled	**521.X**

Horizontal separation

Full-width shelf locks securely into separators at both ends, giving a fixed width. Can be used as full-width or modular shelving.

Width [mm]	Part No. unassembled	Part No. assembled
050	**520.050**	**521.050**
065	**520.065**	**521.065**
075	**520.075**	**521.075**
100	**520.100**	**521.100**

Width [mm]	Part No. unassembled	Part No. assembled
125	**520.125**	**521.125**
150	**520.150**	**521.150**
175	**520.175**	**521.175**
200	**520.200**	**521.200**

Width [mm]	Part No. unassembled	Part No. assembled
225	**520.225**	**521.225**
250	**520.250**	**521.250**
300	**520.300**	**521.300**
350	**520.350**	**521.350**

Width [mm]	Part No. unassembled	Part No. assembled
375	**520.375**	**521.375**
387	**520.387**	**521.387**
450	**520.450**	**521.450**

Interior separation | To allow faster filling

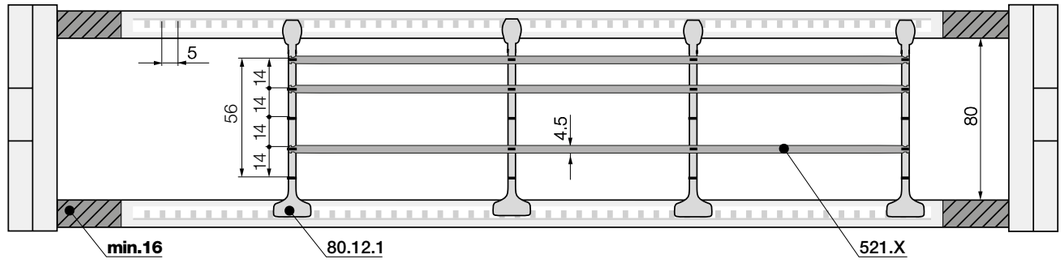

Note: Please be aware of the minimum lateral gap to the side links! **e-chain®: =16mm**
As standard separators are fitted every 2nd e-chain® link!



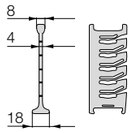

Part No.	
Lean separator	
unassembled	**80.12**
assembled	**80.12.1**

Lean separators[1)]

Quick fitting of shelves in several layers. Enables extremely fast replacement of individual cables in very full e-chains®. Only suitable for e-chains®.

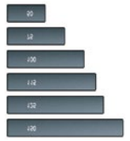

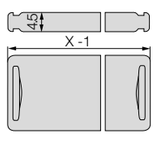

Part No.	
Shelf	
unassembled	**520.X**
assembled	**521.X**

Horizontal separation

Full-width shelf locks securely into separators at both ends, giving a fixed width. Can be used as full-width or modular shelving.

Width [mm]	Part No. unassembled	Part No. assembled
050	**520.050**	**521.050**
065	**520.065**	**521.065**
075	**520.075**	**521.075**
100	**520.100**	**521.100**

Width [mm]	Part No. unassembled	Part No. assembled
125	**520.125**	**521.125**
150	**520.150**	**521.150**
175	**520.175**	**521.175**
200	**520.200**	**521.200**

Width [mm]	Part No. unassembled	Part No. assembled
225	**520.225**	**521.225**
250	**520.250**	**521.250**
300	**520.300**	**521.300**
350	**520.350**	**521.350**

Width [mm]	Part No. unassembled	Part No. assembled
375	**520.375**	**521.375**
387	**520.387**	**521.387**
450	**520.450**	**521.450**



Lean separator for even faster filling: quickly insert several layers of cables into the e-chain® and reduce the installation time by up to 50%. Measured on a 4m long e-chain® fitted with 12 cables. **1) Note: Please combine a maximum of four lean separators with one shelf. Not suitable for side-mounted e-chains®!**

Available from stock
Upon request

Product range



Part No. e-chains® crossbars removable	*Bi* [mm]	*Ba* [mm]	E6.80 [kg/m]
E6.80.05.□.0	50	100	≈ 5.21
E6.80.06.□.0	65	115	≈ 5.28
E6.80.07.□.0	75	125	≈ 5.33
E6.80.08.□.0	87	137	≈ 5.38
E6.80.10.□.0	100	150	≈ 5.45
E6.80.11.□.0	112	162	≈ 5.50
E6.80.12.□.0	125	175	≈ 5.57
E6.80.13.□.0	137	187	≈ 5.62
E6.80.15.□.0	150	200	≈ 5.68
E6.80.16.□.0	162	212	≈ 5.74
E6.80.17.□.0	175	225	≈ 5.80
E6.80.18.□.0	187	237	≈ 5.86
E6.80.20.□.0	200	250	≈ 5.92
E6.80.21.□.0	212	262	≈ 5.98
E6.80.22.□.0	225	275	≈ 6.04
E6.80.23.□.0	237	287	≈ 6.10
E6.80.25.□.0	250	300	≈ 6.16
E6.80.26.□.0	262	312	≈ 6.21
E6.80.27.□.0	275	325	≈ 6.28
E6.80.28.□.0	287	337	≈ 6.33
E6.80.30.□.0	300	350	≈ 6.39

Part No. e-chains® crossbars removable	*Bi* [mm]	*Ba* [mm]	E6.80 [kg/m]
E6.80.31.□.0	312	362	≈ 6.45
E6.80.32.□.0	325	375	≈ 6.51
E6.80.33.□.0	337	387	≈ 6.57
E6.80.35.□.0	350	400	≈ 6.63
E6.80.36.□.0	362	412	≈ 6.69
E6.80.37.□.0	375	425	≈ 6.75
E6.80.38.□.0	387	437	≈ 6.80
E6.80.40.□.0	400	450	≈ 6.88
E6.80.41.□.0	412	462	≈ 6.92
E6.80.42.□.0	425	475	≈ 6.99
E6.80.43.□.0	437	487	≈ 7.04
E6.80.45.□.0	450	500	≈ 7.10
E6.80.46.□.0	462	512	≈ 7.16
E6.80.47.□.0	475	525	≈ 7.22
E6.80.48.□.0	487	537	≈ 7.28
E6.80.50.□.0	500	550	≈ 7.34
E6.80.51.□.0	512	562	≈ 7.40
E6.80.52.□.0	525	575	≈ 7.46
E6.80.53.□.0	537	587	≈ 7.52
E6.80.55.□.0	550	600	≈ 7.58
E6.80.60.□.0	600	650	≈ 7.81

Available bend radii *R* [mm] | 150 | 200 | 250 | 300 | 350 | 400 | 450 |

Order key

E6.80.10.300.0

Series / Type | Inner height | Width index | **Bend radius** | Colour index

Order example:
Complete Part No. with the required radius □. Example:
E6.80.10.300.0 = crossbars removable along the inner and outer radius
Order index for colour options ▶ **www.igus.eu/info-colours**

Unsupported applications | Short travels

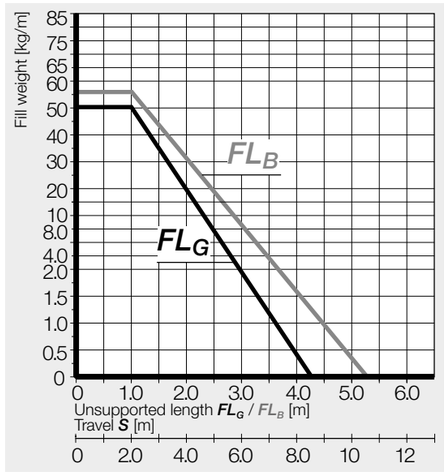

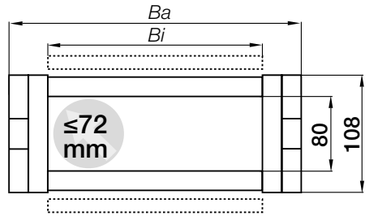

Inner height [mm]	80
Pitch [mm]	65
Links/m [pc.]	16
corresponds to [mm]	1,040
e-chain® length	$L_K = S/2 + K$

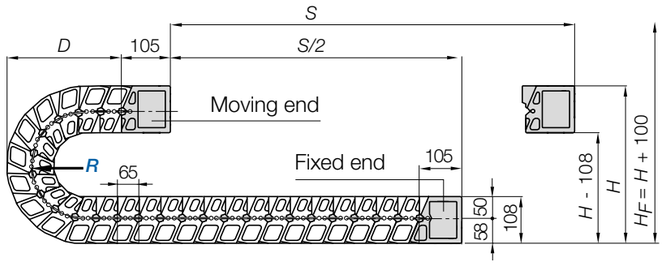

R	150	200	250	300	350	400	450
H	516	616	716	816	916	1,016	1,116
D	306	356	406	456	506	556	606
K	605	760	920	1,075	1,230	1,390	1,545

The required clearance height: H_F = ***H*** **+ 100mm** (with 5.0kg/m fill weight)

Note: If a gliding application is required for a long travel, please consult igus®.

Available from stock
Upon request

KMA mounting brackets | Attachment from any side | Pivoting

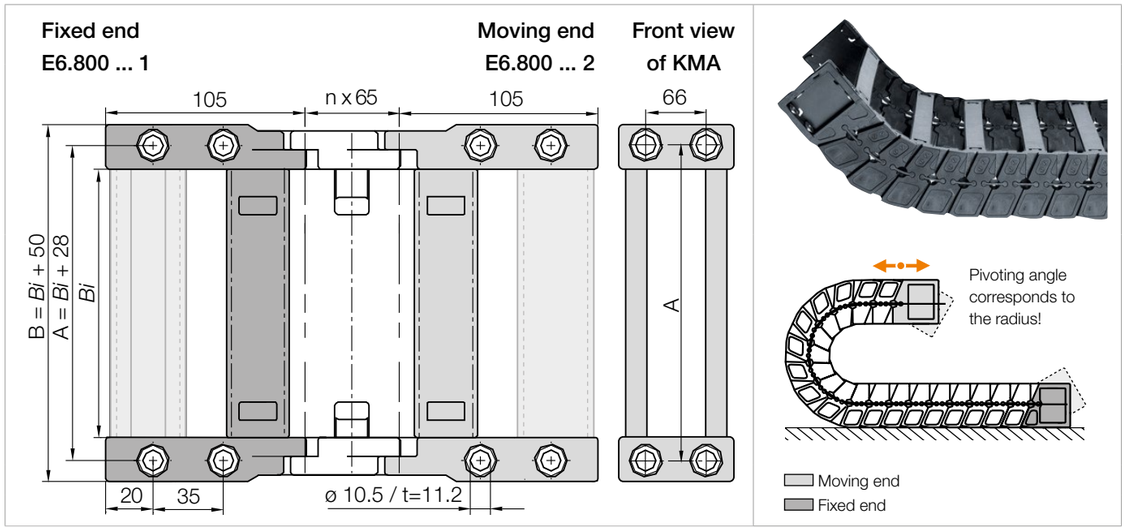

Width index	KMA full set Part No. pivoting	A [mm]	B [mm]	Bi [mm]
05.	E6.800.05.12.☐	78	100	50
06.	E6.800.06.12.☐	93	115	65
07.	E6.800.07.12.☐	103	125	75
08.	E6.800.08.12.☐	115	137	87
10.	E6.800.10.12.☐	128	150	100
11.	E6.800.11.12.☐	140	162	112
12.	E6.800.12.12.☐	153	175	125
13.	E6.800.13.12.☐	165	187	137
15.	E6.800.15.12.☐	178	200	150
16.	E6.800.16.12.☐	190	212	162
17.	E6.800.17.12.☐	203	225	175
18.	E6.800.18.12.☐	215	237	187
20.	E6.800.20.12.☐	228	250	200
21.	E6.800.21.12.☐	240	262	212
22.	E6.800.22.12.☐	253	275	225
23.	E6.800.23.12.☐	265	287	237
25.	E6.800.25.12.☐	278	300	250
26.	E6.800.26.12.☐	290	412	262
27.	E6.800.27.12.☐	303	325	275
28.	E6.800.28.12.☐	315	337	287
30.	E6.800.30.12.☐	328	350	300

Width index	KMA full set Part No. pivoting	A [mm]	B [mm]	Bi [mm]
31.	E6.800.31.12.☐	340	362	312
32.	E6.800.32.12.☐	353	375	325
33.	E6.800.33.12.☐	365	387	337
35.	E6.800.35.12.☐	378	400	350
36.	E6.800.36.12.☐	390	412	362
37.	E6.800.37.12.☐	403	425	375
38.	E6.800.38.12.☐	415	437	387
40.	E6.800.40.12.☐	428	450	400
41.	E6.800.41.12.☐	440	462	412
42.	E6.800.42.12.☐	453	475	425
43.	E6.800.43.12.☐	465	487	437
45.	E6.800.45.12.☐	478	500	450
46.	E6.800.46.12.☐	490	512	462
47.	E6.800.47.12.☐	503	525	475
48.	E6.800.48.12.☐	515	537	487
50.	E6.800.50.12.☐	528	550	500
51.	E6.800.51.12.☐	540	562	512
52.	E6.800.52.12.☐	553	575	525
53.	E6.800.53.12.☐	565	587	537
55.	E6.800.55.12.☐	578	600	550
60.	E6.800.60.12.☐	628	650	600

(KMA = polymer metal mounting bracket)

Order key

E6.800.10 .12 .C .A2

Series | Width index | Full set | C-profile option | Pre-fitted

Note: Possible orientations for KMA mounting brackets. For mounting brackets pre-fitted **without strain relief**, please add index **.A**. For types pre-fitted **with strain relief** please add index **.A1**, **.A2**, **.A3** or **.A4**.



For the C-profile option please add index **.C**.

Interior separation | Increase cable service life

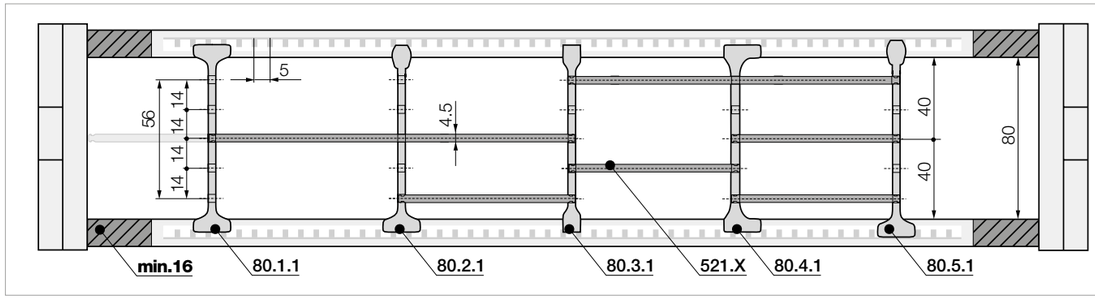

Note: Please be aware of the minimum lateral gap to the side links! **e-chain®: =16mm**
As standard separators are fitted every 2nd e-chain® link!



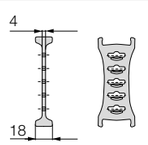

Part No. **Standard separator**
unassembled **80.1**
assembled **80.1.1**

For all applications
Standard separator with a wide base for maximum holding force.



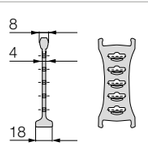

Part No. **Separator, narrow top**
unassembled **80.2**
assembled **80.2.1**

For even faster installation
Wide on one side for high holding force, narrow on opposite side for easy cable fitting.



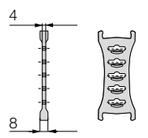

Part No. **Separator, narrow**
unassembled **80.3**
assembled **80.3.1**

For a large number of thin cables
Separator with a narrow base for a large number of thin cables side by side. Saves space.



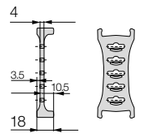

Part No. **Separator, asymmetrical**
unassembled **80.4**
assembled **80.4.1**

For side-mounted applications
Asymmetrical separator, for defined gap distance. No additional spacers required.



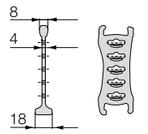

Part No. **Notch separator**
unassembled **80.5**
assembled **80.5.1**

Locks securely in preset increments
Notch separator for exact positioning. Recommended for side-mounted applications.



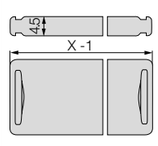

Part No. **Shelf**
unassembled **520.X**
assembled **521.X**

Horizontal separation
Full-width shelf locks securely into separators at both ends, giving a fixed width. Can be used as full-width or modular shelving.

Width [mm]	Part No. unassembled	Part No. assembled
050	520.050	521.050
065	520.065	521.065
075	520.075	521.075
100	520.100	521.100

Width [mm]	Part No. unassembled	Part No. assembled
125	520.125	521.125
150	520.150	521.150
175	520.175	521.175
200	520.200	521.200

Width [mm]	Part No. unassembled	Part No. assembled
225	520.225	521.225
250	520.250	521.250
300	520.300	521.300
350	520.350	521.350

Width [mm]	Part No. unassembled	Part No. assembled
375	520.375	521.375
387	520.387	521.387
450	520.450	521.450

Interior separation | To allow faster filling

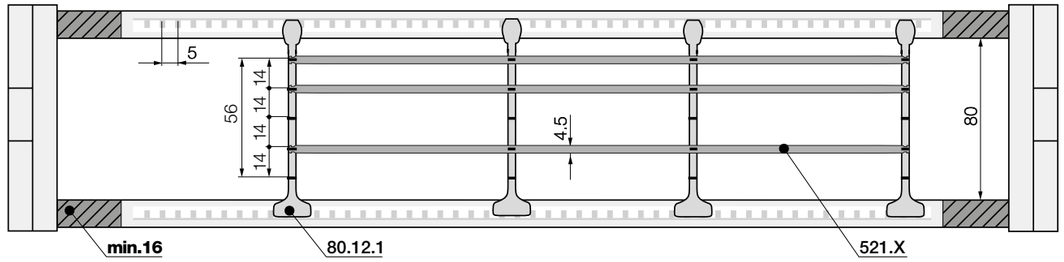

Note: Please be aware of the minimum lateral gap to the side links! **e-chain®: =16mm**
As standard separators are fitted every 2nd e-chain® link!



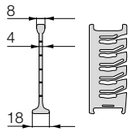

Part No.	
Lean separator	
unassembled	**80.12**
assembled	**80.12.1**

Lean separators[1)]

Quick fitting of shelves in several layers. Enables extremely fast replacement of individual cables in very full e-chains®. Only suitable for e-chains®.

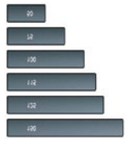

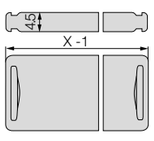

Part No.	
Shelf	
unassembled	**520.X**
assembled	**521.X**

Horizontal separation

Full-width shelf locks securely into separators at both ends, giving a fixed width. Can be used as full-width or modular shelving.

Width [mm]	Part No. unassembled	Part No. assembled
050	**520.050**	**521.050**
065	**520.065**	**521.065**
075	**520.075**	**521.075**
100	**520.100**	**521.100**

Width [mm]	Part No. unassembled	Part No. assembled
125	**520.125**	**521.125**
150	**520.150**	**521.150**
175	**520.175**	**521.175**
200	**520.200**	**521.200**

Width [mm]	Part No. unassembled	Part No. assembled
225	**520.225**	**521.225**
250	**520.250**	**521.250**
300	**520.300**	**521.300**
350	**520.350**	**521.350**

Width [mm]	Part No. unassembled	Part No. assembled
375	**520.375**	**521.375**
387	**520.387**	**521.387**
450	**520.450**	**521.450**



Lean separator for even faster filling: quickly insert several layers of cables into the e-chain® and reduce the installation time by up to 50%. Measured on a 4m long e-chain® fitted with 12 cables. **1) Note: Please combine a maximum of four lean separators with one shelf. Not suitable for side-mounted e-chains®!**

Available from stock
Upon request

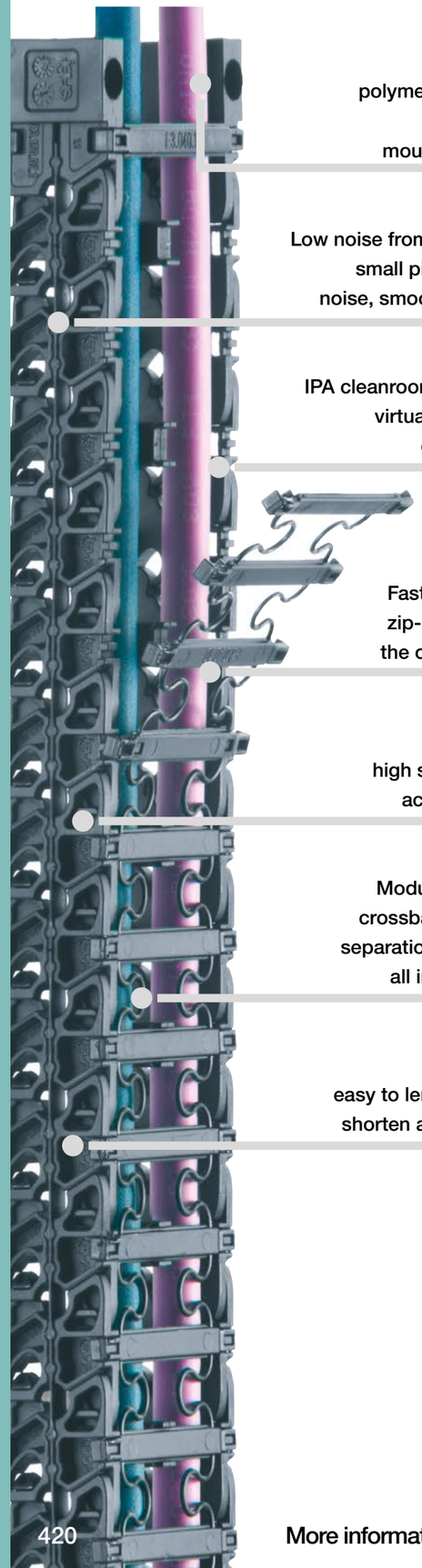

Universal: polymer mounting bracket or mounting angle

Low noise from 38dB(A)[1]: small pitch for low noise, smooth running

IPA cleanroom Class 1[2]: virtually no wear or abrasion

Fast assembly: zip-open along the outer radius

Dynamic: high speeds and accelerations

Modular design: crossbars, interior separation and links all in one band

Modular: easy to lengthen and shorten at any point

High dynamics and cleanroom compatible - E3 system

E3 combines small pitch, smooth running, low noise, stability, easy assembly and low cost. The spring connector element replaces the pin and bore and avoids relative movement between the joints. This means virtually no wear or abrasion (cleanroom). To reduce production and assembly costs, the spring connector is on a segment of ten e-chain® links.

Benefits

- For high speeds and accelerations
- For extremely fast opening and closing
- Low noise 38dB(A)[1] - small pitch for low noise, smooth running
- Suitable for cleanrooms according to IPA cleanroom Class 1[2]

1) Extremely low-noise - tested at the igus® lab
2) Cleanroom - Series E3.15.040.075.0

Typical application areas

- Semiconductor production and machining
- Pick and place machines
- Optics
- Material handling
- Measuring technology
- Printers and plotters
- Cleanroom applications
- General mechanical engineering

Selection table

Part No.	Inner height *hi* [mm]	Outer height *ha* [mm]	Inner width *Bi* [mm]	Outer width *Ba* [mm]	Bend radius *R* [mm]	Unsupported length ≤ [m]	Page
E3 - three-piece e-chain®, crossbars on a strip - zip-open along the outer radius							
E3.10	10	15	20 - 60	32 - 72	015 - 048	≈ 0.70	**422**
E3.15	15	20	20 - 60	32 - 72	032 - 075	≈ 0.90	**426**
E3.22	22	27	20 - 60	32 - 72	044 - 075	≈ 1.20	**430**

Technical data

General properties	
Speed FL_G/acceleration FL_G	≤ 20m/s / ≤ 200m/s²
Speed FL_B/acceleration FL_B	≤ 3m/s / ≤ 6m/s²
e-chain® link material, igumid® G LW - permitted temperature °C	upon request
Crossbar material, igumid® TE - permitted temperature °C	upon request
Flammability class	VDE 0304 IIC UL94-HB

Proof

IPA classification - report IG 0704-400 for E3 system, series E3.15.040.075.0

Test parameters		Result
v_1 = 0.5m/s	a_1 = 1.0m/s²	Cleanroom class 1
v_2 = 1.0m/s	a_2 = 2.0m/s²	Cleanroom class 1
v_3 = 2.0m/s	a_3 = 4.0m/s²	Cleanroom class 1
Overall result		**ISO Class 1**

Fraunhofer TESTED® DEVICE IPA igus GmbH Energy chain / Cable systems Report No. IG 0704-400

Another solution for cleanrooms

Smooth running "T-band", quiet, cost-effective - T3 system

- For high speeds and accelerations
- Virtually no polygon effect
- Low noise 33dB(A) - small pitch for low noise, smooth running
- Suitable for cleanrooms according to IPA cleanroom Class 2

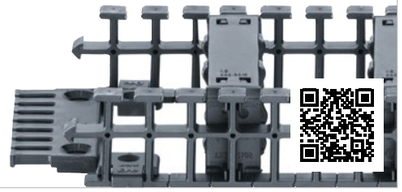

Product range

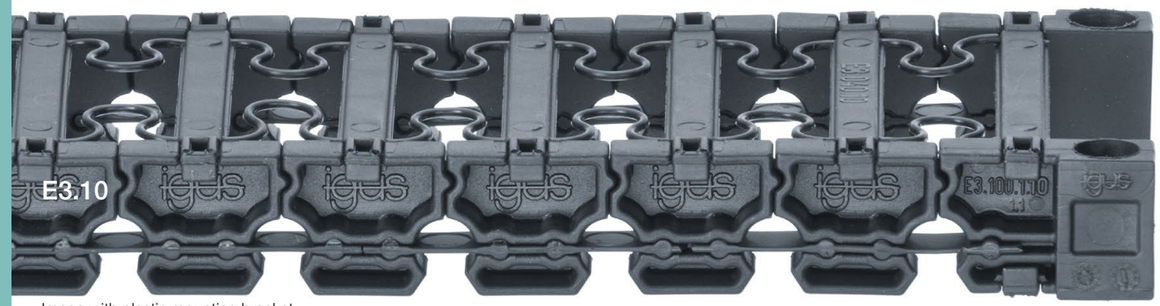

Image with plastic mounting bracket

Part No. zip-open along the outer radius	Inner width *Bi* [mm]	Outer width *Ba* [mm]	Available bend radii *R* [mm]	Weight [kg/m]
E3.10.020.□.0	20	32	| 015 | 028 | – | – |	≈ 0.12
E3.10.040.□.0	40	52	| 015 | – | 038 | 048 |	≈ 0.15
E3.10.060.□.0	60	72	| 015 | – | 038 | – |	≈ 0.20

Order key

E3.10.060.015.0

Series / Type	Inner height	Width index	Bend radius	Colour index

Example:
Complete Part No. with the required radius □. Example:
E3.10.060.015.0 = crossbars on a strip - zip-open along the outer radius
Order index for colour options ▶ **www.igus.eu/info-colours**

Available from stock
Upon request

Unsupported applications | Short travels

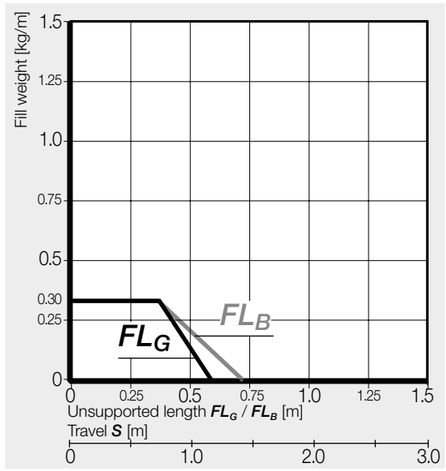

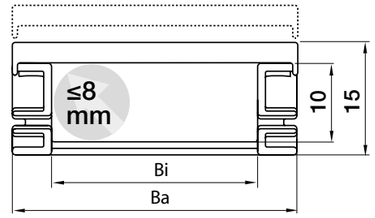

Inner height [mm]	10
Pitch [mm]	16.7
Links/m [pc.]	60
corresponds to [mm]	1,002
e-chain® length	$L_K = S/2 + K$

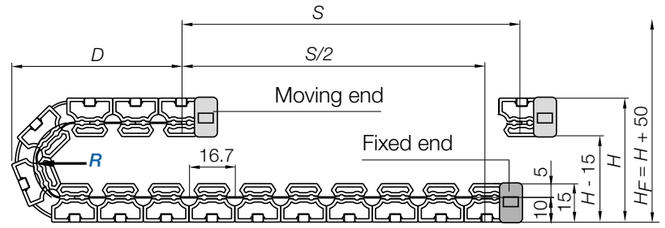

R	015	028	038	048
H	60	86	106	126
D	50	63	73	83
K	85	125	155	185

The required clearance height: $H_F = H$ **+ 50mm** (with 0.1kg/m fill weight)

Interior separation

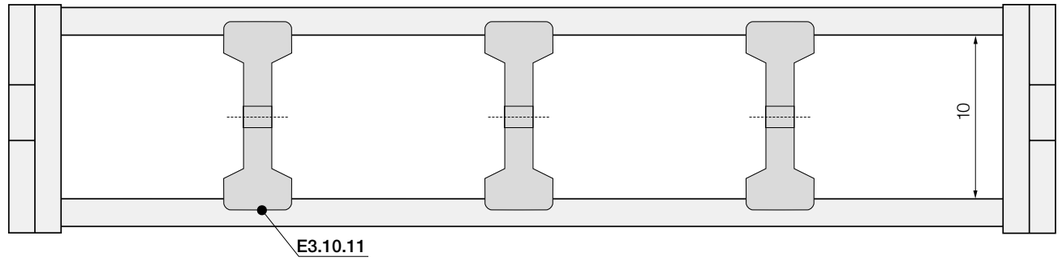

No lateral gap to side links necessary.
As standard separators are fitted every 2nd e-chain® link!

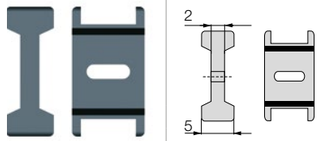

Part No. Separator	
unassembled	E3.10.01
assembled	E3.10.11

Slotted separator

Separators can be arranged at any position in the chain cross section to divide the interior of the e-chain®.

Available from stock
Upon request

Mounting brackets, polymer | Pivoting

Fixed end
E3.100 ... 2

Moving end
E3.100 ... 1

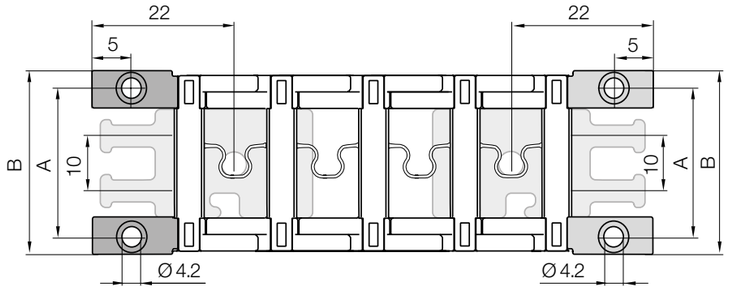

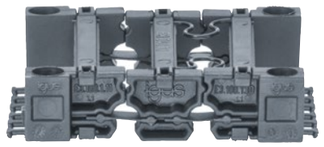

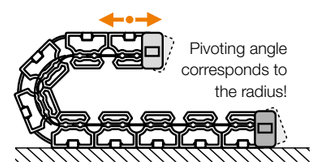

Width index	Part No. Full set* Pivoting without tiewrap plates	A [mm]	B [mm]	Part No. Strain relief at both ends
020.	**E3.100.020.12**	28	36	**E3.020.12**
040.	**E3.100.040.12**	48	56	**E3.040.12**
060.	**E3.100.060.12**	68	76	**E3.060.12**

***Note:** Full set without strain relief. Tiewrap plates must be ordered separately.

Order key

E3.100.060.12

Series	Width index	Full set

Note: Possible attachments options for assembled polymer mounting angles.

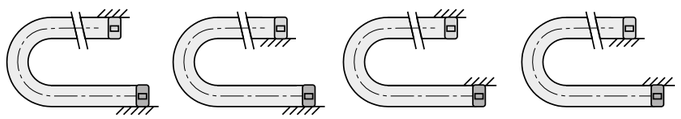

Individual parts | Installation height

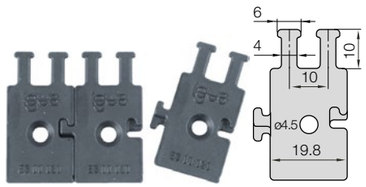

Part No. E3.00.020 Tiewrap plate as an individual part. **Note:** only suitable for assembly in front of the mounting bracket.

Mounting angle, polymer | Locking

Fixed end
E3.10 ... 2

Moving end
E3.10 ... 1

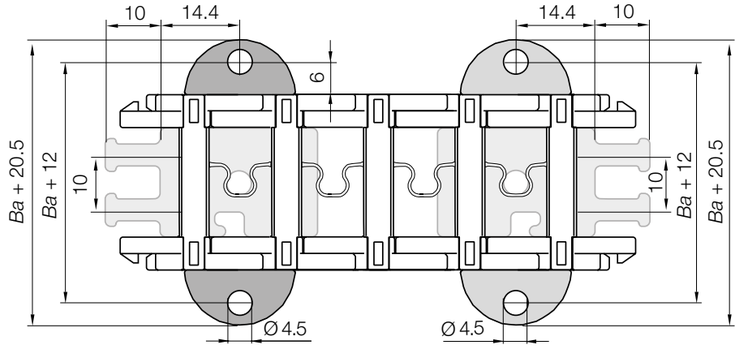



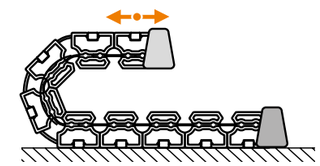

Width index	Part No. Full set Strain relief at both ends + 4 mounting angles*	*Ba* [mm]	Part No. Mounting angle* (individual part)	Part No. Strain relief at both ends
020.	**E3.10.020.12**	32	**E3.10.00**	**E3.020.12**
040.	**E3.10.040.12**	52	**E3.10.00**	**E3.040.12**
060.	**E3.10.060.12**	72	**E3.10.00**	**E3.060.12**

***Note:** If mounting brackets are used, two links each end must be added to the calculated e-chain® length, because the first two links are fixed by the mounting brackets.

Order key

E3.10.060.12

Series	Width index	Full set

Note: Possible attachments options for assembled polymer mounting angles.

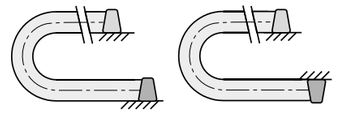

Individual parts | Installation height

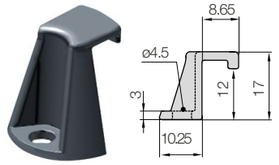

Part No. E3.10.00
Mounting angle as an individual part.

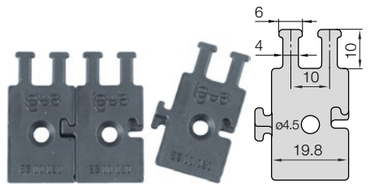

Part No. E3.00.020 Tiewrap plate as an individual part. **Note:** only suitable for assembly in front of the mounting bracket.

Product range



Image with plastic mounting bracket

Part No. zip-open along the outer radius	Inner width *Bi* [mm]	Outer width *Ba* [mm]	Available bend radii *R* [mm]	Weight [kg/m]
E3.15.020.□.0	20	32	| 032 | – | – | – |	≈ 0.22
E3.15.040.□.0	40	52	| 032 | 038 | 048 | 075 |	≈ 0.25
E3.15.060.□.0	60	72	| 032 | 038 | 048 | 075 |	≈ 0.32

Order key

E3.15.060.032.0

Series / Type | Inner height | Width index | Bend radius | Colour index

Example:
Complete Part No. with the required radius □. Example:
E3.15.060.032.0 = crossbars on a strip - zip-open along the outer radius
Order index for colour options ▶ **www.igus.eu/info-colours**

Available from stock
Upon request

Unsupported applications | Short travels

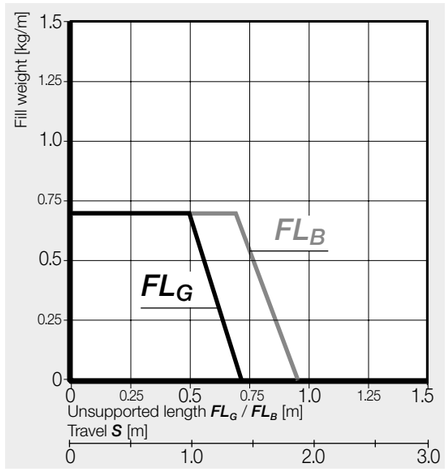

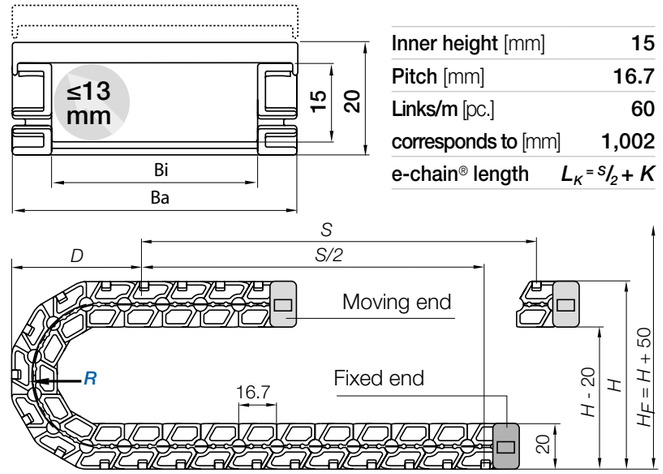

Inner height [mm]	15
Pitch [mm]	16.7
Links/m [pc.]	60
corresponds to [mm]	1,002
e-chain® length	$L_K = S/2 + K$

R	032	038	048	075
H	99	111	131	185
D	67	73	83	110
K	135	155	185	270

The required clearance height: $H_F = H$ **+ 50mm** (with 0.2kg/m fill weight)

Interior separation

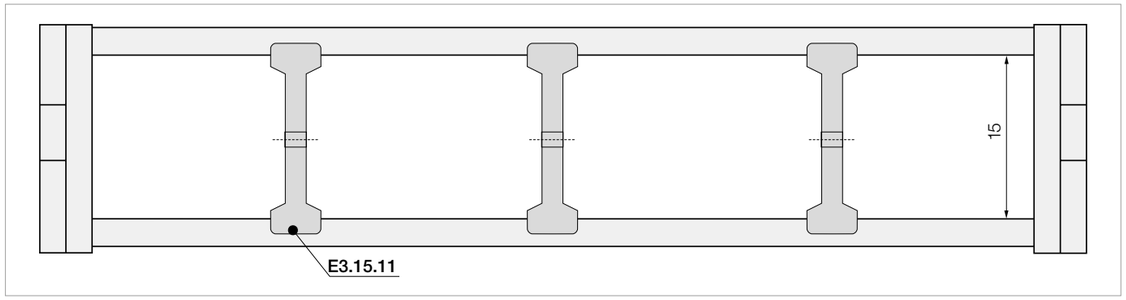

No lateral gap to side links necessary.
As standard separators are fitted every 2nd e-chain® link!

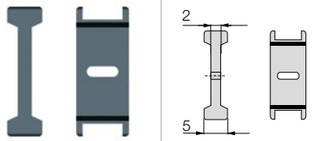

Part No. Separator	
unassembled	**E3.15.01**
assembled	**E3.15.11**

Slotted separator

Separators can be arranged at any position in the chain cross section to divide the interior of the e-chain®.



Part No. Slotted separator on a strip	
unassembled	**E3.15.01.10**
assembled	**E3.15.11.10**

Slotted separator on a strip

Five slotted separators on a strip are assembled on the crossbars. This creates separate chambers to protect the cables - same dimensions as E3.15.01

Mounting brackets, polymer | Pivoting

Fixed end
E3.150 ... 2

Moving end
E3.150 ... 1

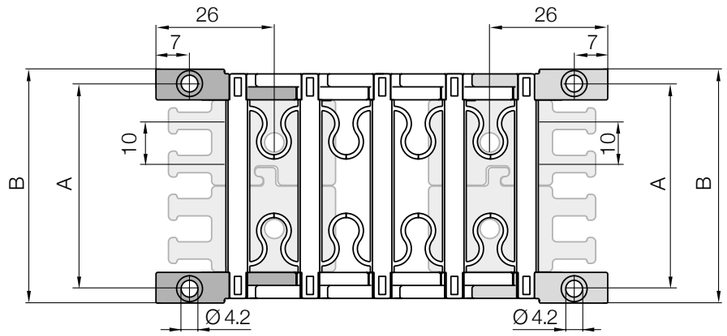



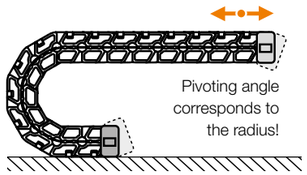

Width index	Part No. Full set* Pivoting without tiewrap plates	A [mm]	B [mm]	Part No. Strain relief at both ends
020.	**E3.150.020.12**	28	36	**E3.020.12**
040.	**E3.150.040.12**	48	56	**E3.040.12**
060.	**E3.150.060.12**	68	76	**E3.060.12**

***Note:** Full set without strain relief. Tiewrap plates must be ordered separately.

Order key

E3.150.060.12

Series | Width index | Full set

Note: Possible variations for assembled polymer mounting brackets.

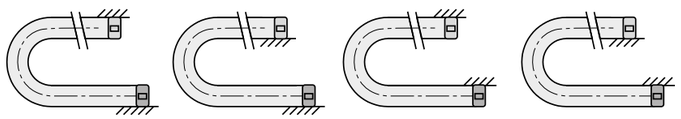

Individual parts | Installation height

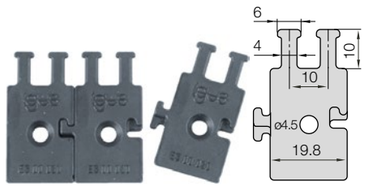

Part No. E3.00.020 Tiewrap plate as an individual part. **Note:** only suitable for assembly in front of the mounting bracket.

Mounting angle, polymer | Locking

Fixed end
E3.15 ... 2

Moving end
E3.15 ... 1

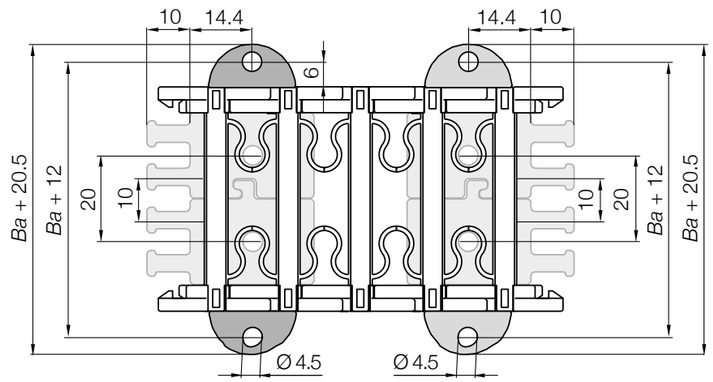



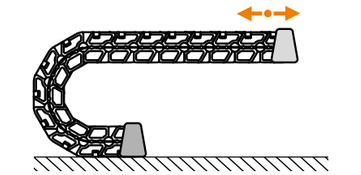

Width index	Part No. Full set Strain relief at both ends + 4 mounting angles*	*Ba* [mm]	Part No. Mounting angle* (individual part)	Part No. Strain relief at both ends
020.	**E3.15.020.12**	32	**E3.15.00**	**E3.020.12**
040.	**E3.15.040.12**	52	**E3.15.00**	**E3.040.12**
060.	**E3.15.060.12**	72	**E3.15.00**	**E3.060.12**

***Note:** If mounting brackets are used, two links each end must be added to the calculated e-chain® length, because the first two links are fixed by the mounting brackets.

Order key

E3.15.060.12

Series | Width index | Full set

Note: Possible attachments options for assembled polymer mounting angles.

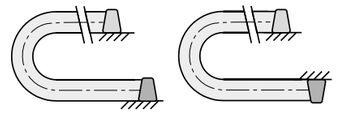

Individual parts | Installation height

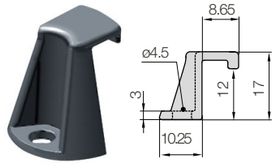

Part No. E3.15.00
Mounting angle as an individual part.

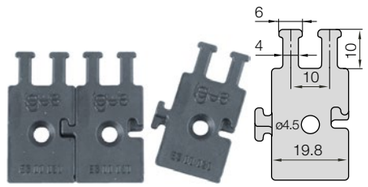

Part No.E3.00.020 Tiewrap plate as an individual part. **Note:** only suitable for assembly in front of the mounting bracket.

Product range



Image with plastic mounting bracket

Part No. zip-open along the outer radius	Inner width *Bi* [mm]	Outer width *Ba* [mm]	Available bend radii *R* [mm]	Weight [kg/m]
E3.22.020.□.0	20	32	| 044 | 050 | 075 |	≈ 0.30
E3.22.040.□.0	40	52	| 044 | 050 | 075 |	≈ 0.32
E3.22.060.□.0	60	72	| 044 | – | 075 |	≈ 0.41

Order key

E3.22.060.044.0

Series / Type	Inner height	Width index	Bend radius	Colour index

Example:

Complete Part No. with the required radius □. Example:

E3.22.060.044.0 = crossbars on a strip - zip-open along the outer radius

Order index for colour options ▶ **www.igus.eu/info-colours**

Available from stock

Upon request

Unsupported applications | Short travels

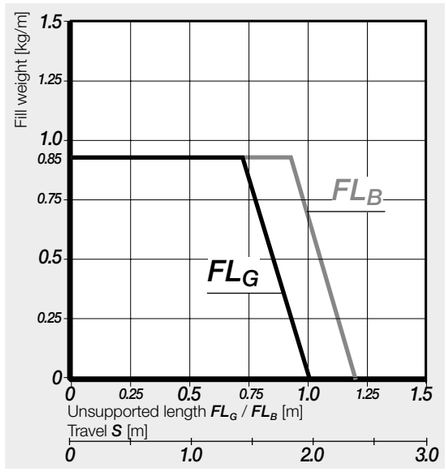

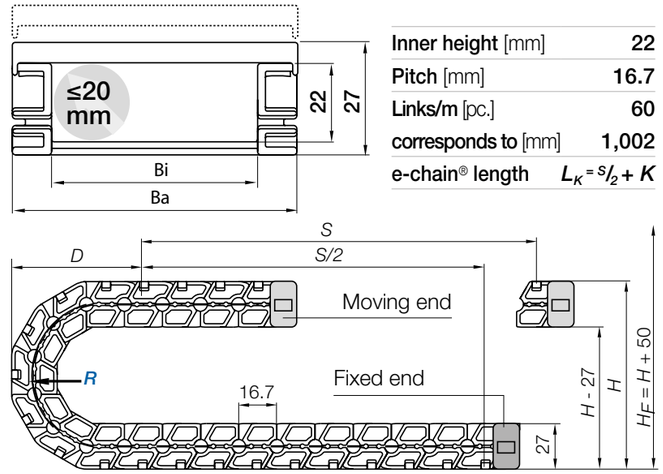

Inner height [mm]	22
Pitch [mm]	16.7
Links/m [pc.]	60
corresponds to [mm]	1,002
e-chain® length	$L_K = S/2 + K$

R	044	050	075
H	134	146	196
D	82	88	113
K	175	195	270

The required clearance height: $H_F = H$ **+ 50mm** (with 0.3kg/m fill weight)

Interior separation

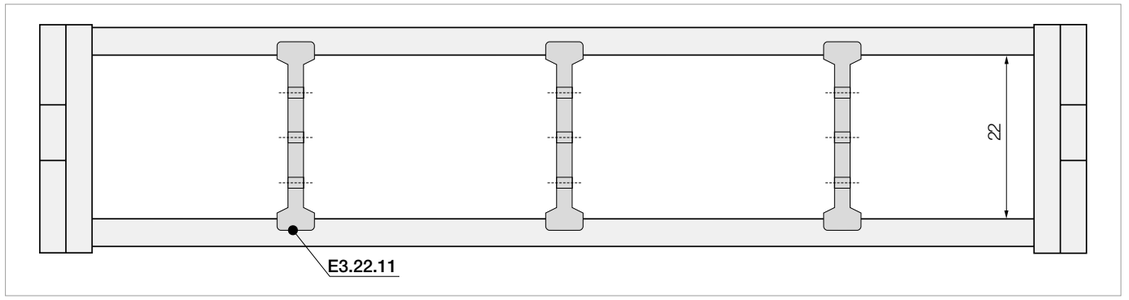

No lateral gap to side links necessary.

As standard separators are fitted every 2nd e-chain® link!

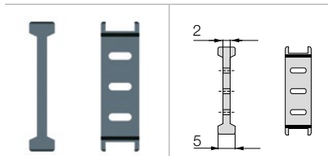

Part No. Separator	
unassembled	**E3.22.01**
assembled	**E3.22.11**

Slotted separator

Separators can be arranged at any position in the chain cross section to divide the interior of the e-chain®.

Available from stock

Upon request

Mounting brackets, polymer | Pivoting

Fixed end
E3.220 ... 2

Moving end
E3.220 ... 1

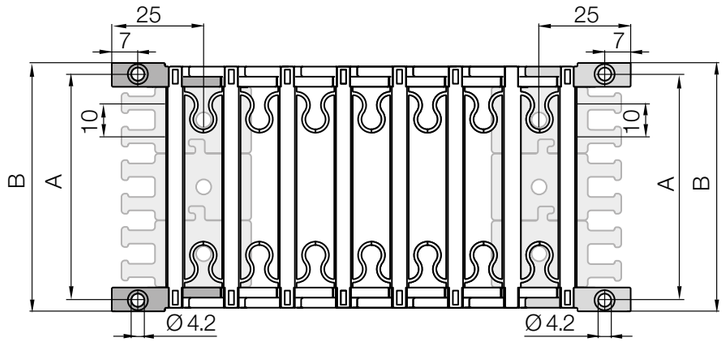



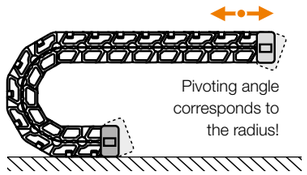

Width index	Part No. Full set* Pivoting without tiewrap plates	A [mm]	B [mm]	Part No. Strain relief at both ends
020.	E3.220.020.12	28	36	E3.020.12
040.	E3.220.040.12	48	56	E3.040.12
060.	E3.220.060.12	68	76	E3.060.12

***Note:** Full set without strain relief. Tiewrap plates must be ordered separately.

Order key

E3.220.060.12

Series | Width index | Full set

Note: Possible orientations for assembled polymer mounting brackets.

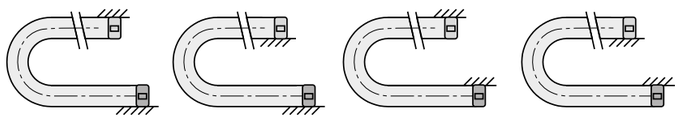

Individual parts | Installation height

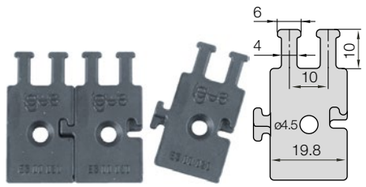

Part No. E3.00.020 Tiewrap plate as an individual part. **Note:** only suitable for assembly in front of the mounting bracket.

Mounting angle, polymer | Locking

Fixed end
E3.22 ... 2

Moving end
E3.22 ... 1

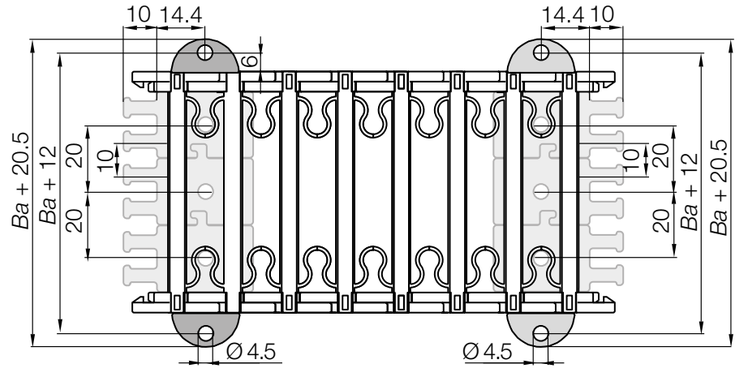



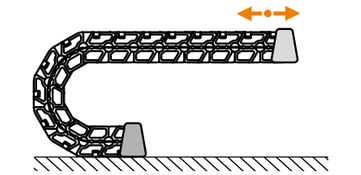

Width index	Part No. Full set Strain relief at both ends + 4 mounting angles*	*Ba* [mm]	Part No. Mounting angle* (individual part)	Part No. Strain relief at both ends
020.	E3.22.020.12	32	E3.22.00	E3.020.12
040.	E3.22.040.12	52	E3.22.00	E3.040.12
060.	E3.22.060.12	72	E3.22.00	E3.060.12

***Note:** If mounting brackets are used, two links each end must be added to the calculated e-chain® length, because the first two links are fixed by the mounting brackets.

Order key

E3.22.060.12

Series | Width index | Full set

Note: Possible attachments options for assembled polymer mounting angles.

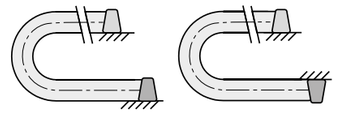

Individual parts | Installation height

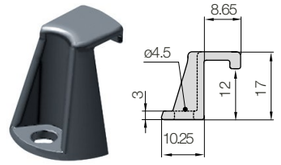

Part No. E3.22.00
Mounting angle as an individual part.

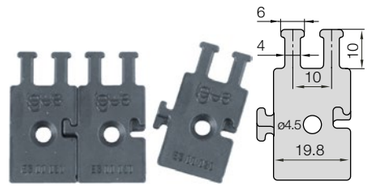

Part No. E3.00.020 Tiewrap plate as an individual part. **Note:** only suitable for assembly in front of the mounting bracket.



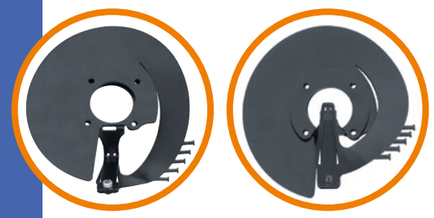

**Base plates are delivered as standard as part of the twisterband module!

Up to 7,000°* rotary movements in small spaces - twisterband

With the compact igus® twisterband rotations can be achieved cost-effectively and with low wear and low maintenance, even in confined spaces. Energy, data and media are securely guided. Available in 5 sizes.

*Rotary movements up to 3,600° can be ordered from stock. Above 3,600°, please contact igus®.

Benefits

- Up to 7,000° rotation horizontally and 3,000° rotation vertically
- Rotary speeds of up to 180°/s possible
- Compact, modular and light
- Strips can be shortened as required
- Minimum installation spaces, fits tightly around the rotary axis
- Can be used reliably in various installation positions (horizontal, vertical, upside down)
- Cost-effective
- Easy filling
- Ideal in combination with igus® chainflex® cables for rotary movements in very limited installation spaces

Typical application areas

- Cable drums
- Robots (axis 1/ 6), Scara robots
- Machine tools
- Leisure rides
- Medical equipment
- Radar and telescope equipment
- Aerospace, test, measurement, handling, lifting and installation equipment
- Wind turbines (e.g. blade adjustment)
- Wherever rotary unions are used

Selection table

Part No.	Inner width *Bi* [mm]	Inner height *hi* [mm]	X_1 [mm]	X_2 [mm]	Bend radius [mm] *R min.*	Bend radius [mm] *R max.*	Cable *d1* ≤ ø [mm]	Page
twisterband - e-chain® links on a strip								
TB12.23.9[1]	23	9	40	140	024	035	7	**436**
TB20.44.12[1]	44	12	50	220	034	057	9	**436**
TB20.44.18[2]	44	18	50	220	034	057	14	**436**
TB29.27.22[2]	27	22	200	320	069	082	17	**436**
TB30.75.22[2]	75	22	90	330	044	077	17	**436**

1) Openable with "easy" design 2) Openable with film-hinge

X_1 = inner machine installation space X_2 = outer machine installation space

Technical data

General properties	
Material	igumid® NB and igumid® TE
Speed / acceleration	180°/s
Permitted temperature °C	0°C / +70°C
Flammability class	VDE 0304 IIC UL94-HB

Size overview

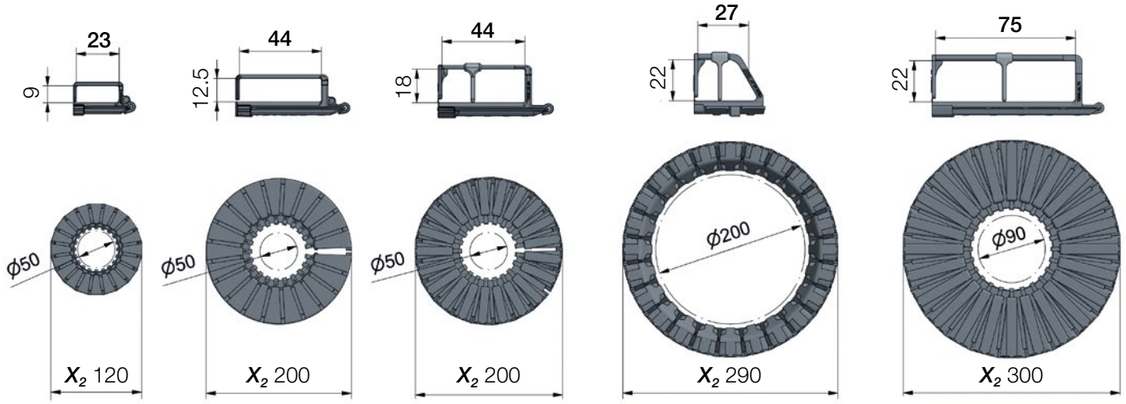

TB12.23.9 **TB20.44.12** **TB20.44.18** **TB29.27.22** **TB30.75.22**

Calculation

Number of strips depends on angle of rotation (please always round up number of strips)

TB12: XX ≈	$\frac{XXXX°}{360}$ **+ 2 =**	**Example: XX ≈**	$\frac{1200°}{360}$ **+ 2 =**	**Result: XX ≈ 6 strips**
TB20: XX ≈	$\frac{XXXX°}{340}$ **+ 2 =**	**Example: XX ≈**	$\frac{1200°}{340}$ **+ 2 =**	**Result: XX ≈ 6 strips**
TB29: XX ≈	$\frac{XXXX°}{180}$ **+ 2 =**	**Example: XX ≈**	$\frac{720°}{180}$ **+ 2 =**	**Result: XX ≈ 6 strips**
TB30: XX ≈	$\frac{XXXX°}{180}$ **+ 6 =**	**Example: XX ≈**	$\frac{1200°}{180}$ **+ 6 =**	**Result: XX ≈ 13 strips**

XXXX° = angle of rotation

Product range

Part No. twisterband	Inner width *Bi* [mm]	Inner height *hi* [mm]	X_1 [mm]	X_2 [mm]	Bend radius [mm] *R min.*	*R max.*	Cable *d1* ≤ ø [mm]
Openable with "easy" design							
TB12.23.9 .[XX].01.0	23	9	40	140	24	35	7
TB20.44.12.[XX].01.0	44	12	50	220	34	57	9
Openable with film-hinge							
TB20.44.18.[XX].01.0	44	18	50	220	34	57	14
TB29.27.22.[XX].02.0*	27	22	200	320	69	82	17
TB30.75.22.[XX].01.0	75	22	90	330	44	77	17

Note*: Rotary movement up to max. 720°.

X_1 = ø inner machine installation space X_2 = ø outer machine installation space

Order key

TB20.44.12.6.02.0

Series	Inner width	Inner height	Number of strips	With integrated strain relief tiewrap plates	Colour index

Order example:

Complete Part No. with required number of strips [XX] . Example:

TB20.44.12.6.01.0 = 6 strips, openable with "easy" design

TB29.27.22.6.02.0 = 6 strips, openable with film-hinge

Interior separation

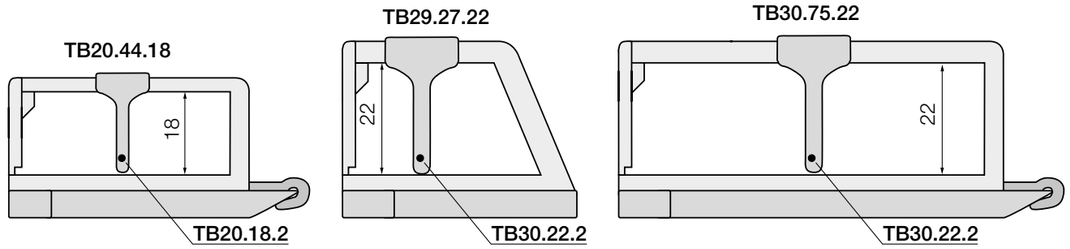

Separators are delivered unassembled. Simply push onto the openable crossbar.



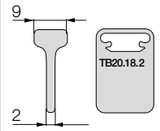

Part No. Separator for TB20.44.18

unassembled **TB20.18.2**



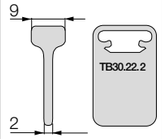

Part No. Separator for TB29.27.22+TB30.75.22

unassembled **TB30.22.2**

Separators

To fit, simply open the e-chain®, insert a cable and press the separator onto the crossbar. Then add more cables. The separators provide a clear, cable-friendly interior separation.

Installation dimensions

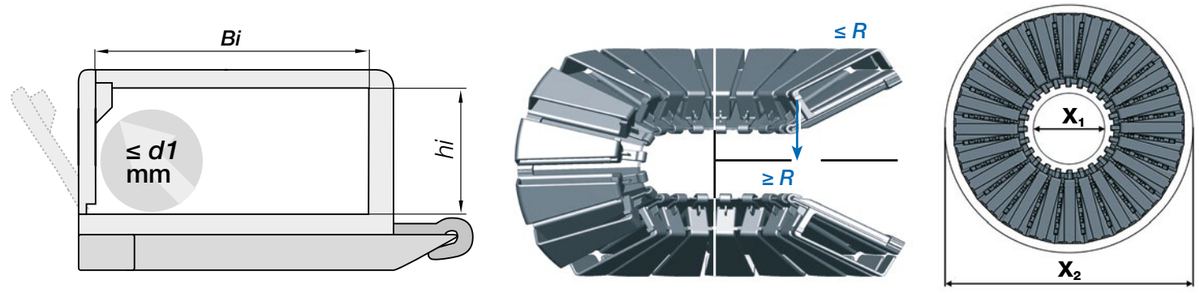

Base plate dimensions | Made of steel with strain relief

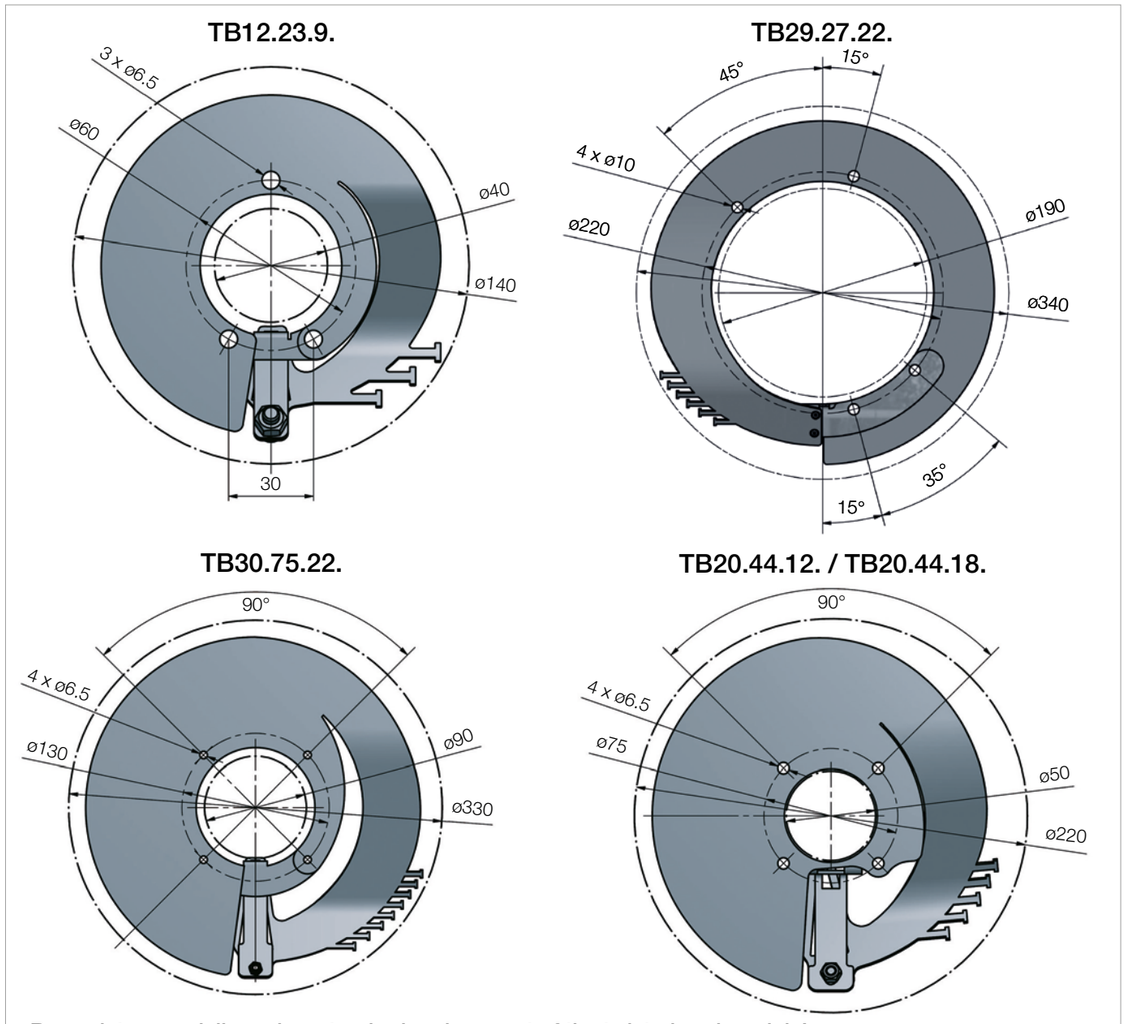

Base plates are delivered as standard and are part of the twisterband module!

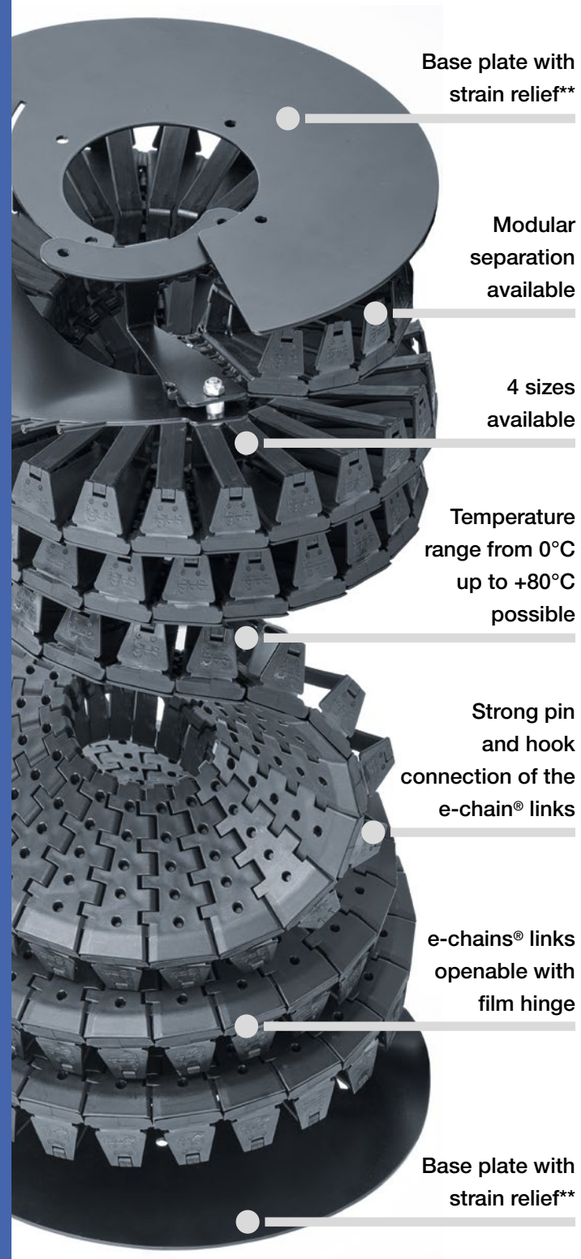



**Base plates are delivered as standard as part of the twisterband module!

Rotary movement in the most confined spaces, even stronger - twisterband HD

Instead of strips, the twisterband HD has a strong pin/hook connection between the e-chain® links. Longer service life and higher filling are possible.

*Rotary movements up to 3,600° can be ordered from stock. Above 3,600°, please contact igus®.

Benefits

- Continuous cable guidance in rotational movements
- Strong pin/hook connection for high load and long service life
- For routing electrical and fibre optic cables and pneumatic lines in one system
- Stop-dogs for defined bend radius
- Cable-friendly thanks to defined radius stops
- Max. rotating speed: 180°/s

Typical application areas

- Machining heads on machine tools
- Rotary tables
- Axis 6 on robots
- Generally all applications that currently work with slip rings

Selection table

Part No.	Inner width *Bi* [mm]	Inner height *hi* [mm]	X_1 [mm]	X_2 [mm]	Bend radius [mm] *R min.*	Bend radius [mm] *R max.*	Cable*d1* ≤ ø [mm]	Page
twisterband HD - openable with film hinge								
TBHD12.24.11	24	11	40	140	024	035	10	**440**
TBHD20.44.12	44	12	50	220	037	063	11	**440**
TBHD20.44.18	44	18	50	220	037	063	14	**440**
TBHD30.75.22	75	22	90	330	044	077	17	**440**
TBHD42.135.30	135	30	90	500	056	119	24	**440**

X_1 = inner machine installation space X_2 = outer machine installation space

Technical data

General properties	
Material	igumid® G LW and igumid® NB
Speed / acceleration	180°/s
Permitted temperature °C	0°C / +80°C
Flammability class	VDE 0304 IIC UL94-HB

Size overview

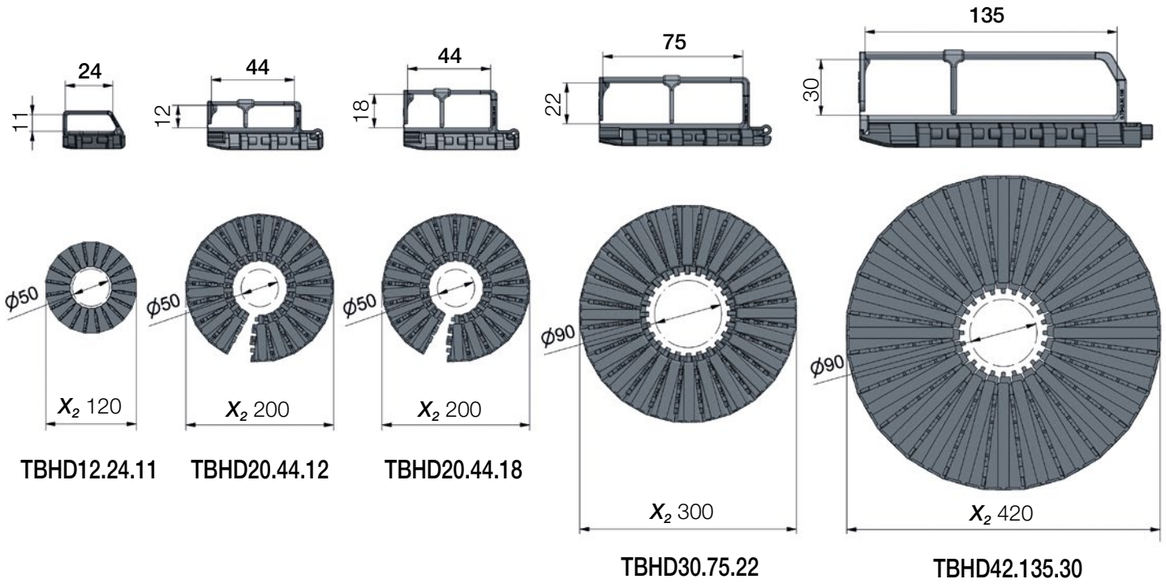

Product range

Part No. twisterband HD	Inner width *Bi* [mm]	Inner height *hi* [mm]	X_1 [mm]	X_2 [mm]	Bend radius [mm] *R min.*	*R max.*	Cable *d1* ≤ ø [mm]
Openable with film-hinge							
TBHD12.24.11. XXX .01.0	24	11	40	140	024	035	10
TBHD20.44.12. XXX .01.0	44	12	50	220	037	063	11
TBHD20.44.18. XXX .01.0	44	18	50	220	037	063	14
TBHD30.75.22. XXX .01.0	75	22	90	330	044	077	17
TBHD42.135.30. XXX .01.0	135	30	90	500	056	119	24

X_1 = ø inner machine installation space X_2 = ø outer machine installation space

Order key

TBHD30.75.22.180.01.0

Series	Inner width	Inner height	Rotation angle	With mounting bracket	Colour index

Order example:

Complete Part No. with the required rotation angle XXX . Example:
TBHD30.75.22.180.01.0 = openable with film hinge

Interior separation

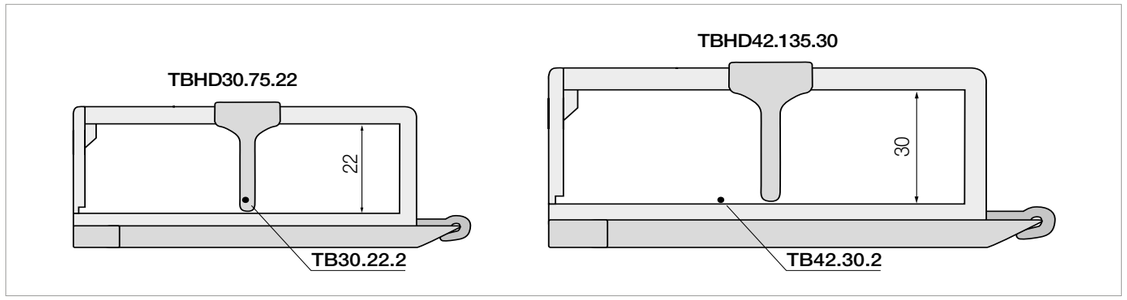

Separators are delivered unassembled. Simply push onto the openable crossbar.



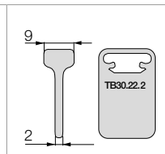

Part No. Separator for TBHD30.75.22
unassembled **TB20.18.2**



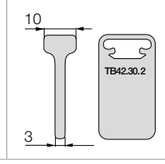

Part No. Separator for TBHD42.135.30
unassembled **TB30.22.2**

Separators

To fit, simply open the e-chain®, insert a cable and press the separator onto the crossbar. Then add more cables. The separators provide a clear, cable-friendly interior separation.

Installation dimensions

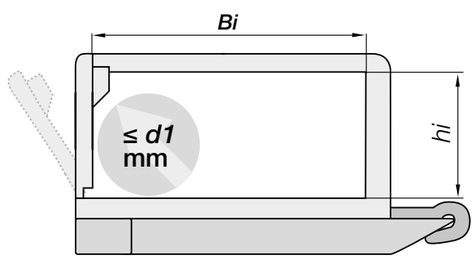

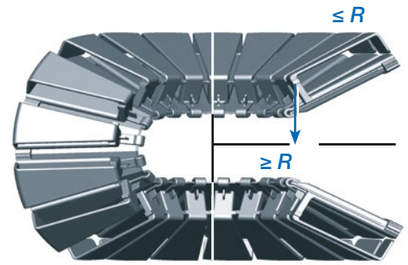

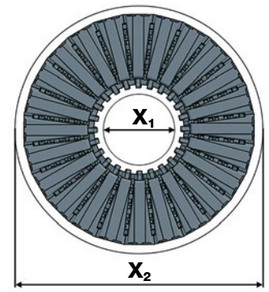

Base plate dimensions | Made of steel with strain relief

TBHD12.24.11

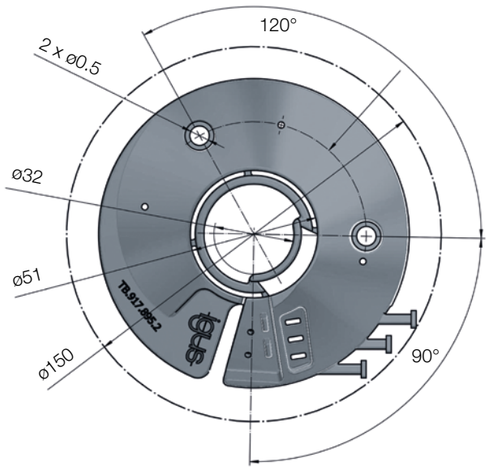

TBHD20.44.18 / TBHD20.44.12

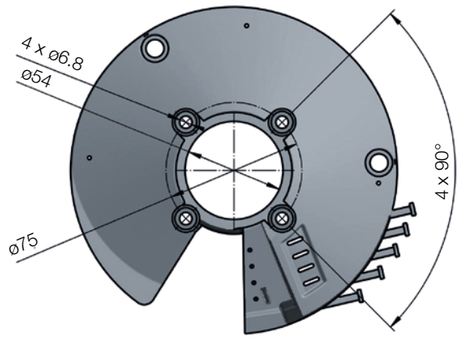

TBHD30.75.22

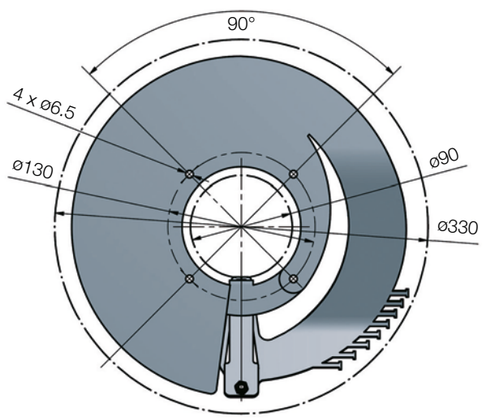

TBHD42.135.30

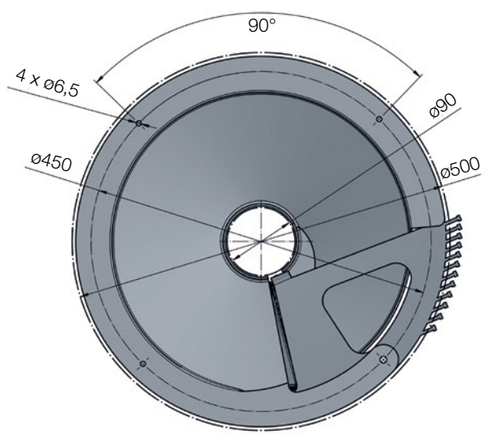

Base plates are delivered as standard and are part of the twisterband module!



ENERGY
DATA
AIR
LIQUIDS
GUIDANCE
IN ONE SYSTEM

The cable drum without a slip ring - igus® e-spool®

Routing many different cables in a small space: e-spool® uniquely combines two different energy supply systems. The one standard e-chain® is guided by a roller and always provides the correct length and tension of the energy supply system through an integrated retaining spring. In the starting position, the e-chain® is rolled up completely to save space. The twisterband connects the roller with the shaft end block, serving as an interface to the supply side cables. With twisterband no slip ring is needed. This makes data transmission highly reliable, while enabling a high degree of flexibility at the same time. Different media and cable/hose diameters can be carried side by side in one drum (diameters up to 17mm).

Benefits

- Energy supply is possible in all directions (horizontal, vertical, diagonal)
- Space-saving, no "chain station", as the e-chain® is rolled in the starting position, ensuring the paths remain clear
- Cables can be retrospectively added or changed
- Alternative to zig-zag solutions
- Maximum extension and retraction speed 1m/s
- Large standard product range and special projects available

Typical application areas

- Telescopic applications
- Theatre, stage and lighting technology
- Space-saving alternative to zig-zag solutions

Selection table

Part No.	Max. travel distance [m]	Drum ø [mm]	Max. cable ø [mm]	Page
SPFL e-spool® flex light 2.0 - for easy integration into existing customer structures				
SPFL.120	3	120	7	444
SPFL.250	5 -15	250	5 - 15	444
SPF e-spool® flex 2.0 - continuous panel feed				
SPF.250	5 -15	250	5 -15	446
SPF e-spool® flex 2.0 mini - for small installation spaces				
SPF.120	3	120	7	448
SP1 / SPHD1 e-spool® compact - space-saving, spring driven				
SP1.240	2	240	7	450
SP1.400	4	400	12	450
SPHD1.400	4	400	12	450
SPC1 e-spool® for manual operation - cable or hose pulled out by hand				
SPC1.300	5	300	12	452
SP1 e-spool® standard				
SP1.600 / SP2.600*	4	600	17	455
SP1.700 / SP2.700*	7	700	17	455
SP1.850 / SP2.850*	14	850	17	455
SP1 e-spool® HD - for vertical applications, downwards				
SPHD1.600 / SPHD2.600*	4	600	17	456
SPHD1.700 / SPHD2.700*	7	700	17	456
SPHD1.850 / SPHD2.850*	14	850	17	456
e-spool® power - motor-driven, for long extension lengths				
e-spool® power**	25	upon request		458

Part No. SP1 and SPHD1 with 1 twisterband, Part No. SP2 and SPHD2 with 2 twisterbands.

Please contact us at ▶ **www.igus.eu/contact

Technical data

General properties	
Max. speed	≤ 1m/s
Maximum acceleration	≤ 1m/s²
Permitted temperature °C	0°C to +70°C / HD variants: 0°C to +80°C
Maximum fill weight, vertical	≤ 1kg/m



Easy handling: pull-out force is almost constant and secure locking

Without interruption: for energy, data and air

Assembly-friendly: easy replacement of the cable, even with connectors fitted

Space-saving: cable retracts into a compact unit

For easy integration into existing customer structures - e-spool® flex light 2.0

The e-spool® flex 2.0 is the igus® cable drum without a slip ring. Cables diameters from 5mm to 15mm can be used. The cable is safely guided through a feed-through to ensure that it is properly wound up at all times. The intended use of the e-spool® flex light 2.0 is cable guidance with automatic retraction by spring tension for integration into customer structures.

Benefits

- Without interruption (no slip ring), for energy, data, and air
- Space-saving
- Universal assembly in customer structures
- Constant tensile strain on the cable
- Locking mechanism

Typical application areas

- Control panels
- Robotics and automation

Product range

Part No. SPFL	Cable diameter from - to max. [mm]	Max. extension length [m]	Required cable length inside the chain [mm]	System weight[1)] [kg]
SPFL.120.07.01.SP*	5 - 7	3	1.1	≈ 2.3
SPFL.250.08.01.SP*	5 - 8	15	4.5	≈ 7.0
SPFL.250.11.01.SP*	8 - 11	10	3.3	≈ 7.0
SPFL.250.15.01.SP*	11 - 15	5	2.4	≈ 7.0

*Index SP = retraction with a retaining spring and locking mechanism.

1) System weight without fill weight.

Order key

SPFL.250.08.01.SP

Series / Type	Disc diameter	Cable diameter	Version	Drive type
SPFL	250	08	01	SP

Order example:

The index ☐ corresponds to the required drive type:

SP for retraction with a with retaining spring and locking mechanism

Installation dimensions

Part No. SPFL	A [mm]	B [mm]	C [mm]	D [mm]	E [mm]	F [mm]
SPFL.120.07.01.SP	94	156	192	121.5	106,5	259
SPFL.250.08.01.SP	151.5	130	335	210	210	462
SPFL.250.11.01.SP	167.5	130	335	210	210	462
SPFL.250.15.01.SP	184.5	130	335	210	210	462

Note: The spring versions are provided with a ratchet. The locking mechanism can be removed subsequently.

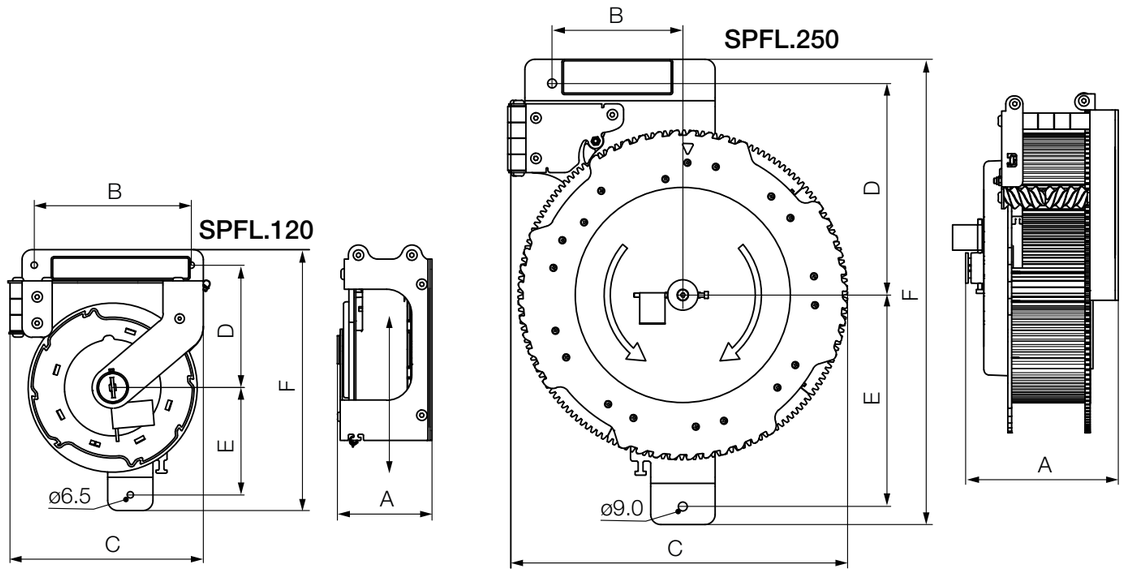

Note: Please consider VDE 0298 part 4 (current carrying capacity and conversion factors for wound cables) when selecting your cables and using e-spool® flex light 2.0.

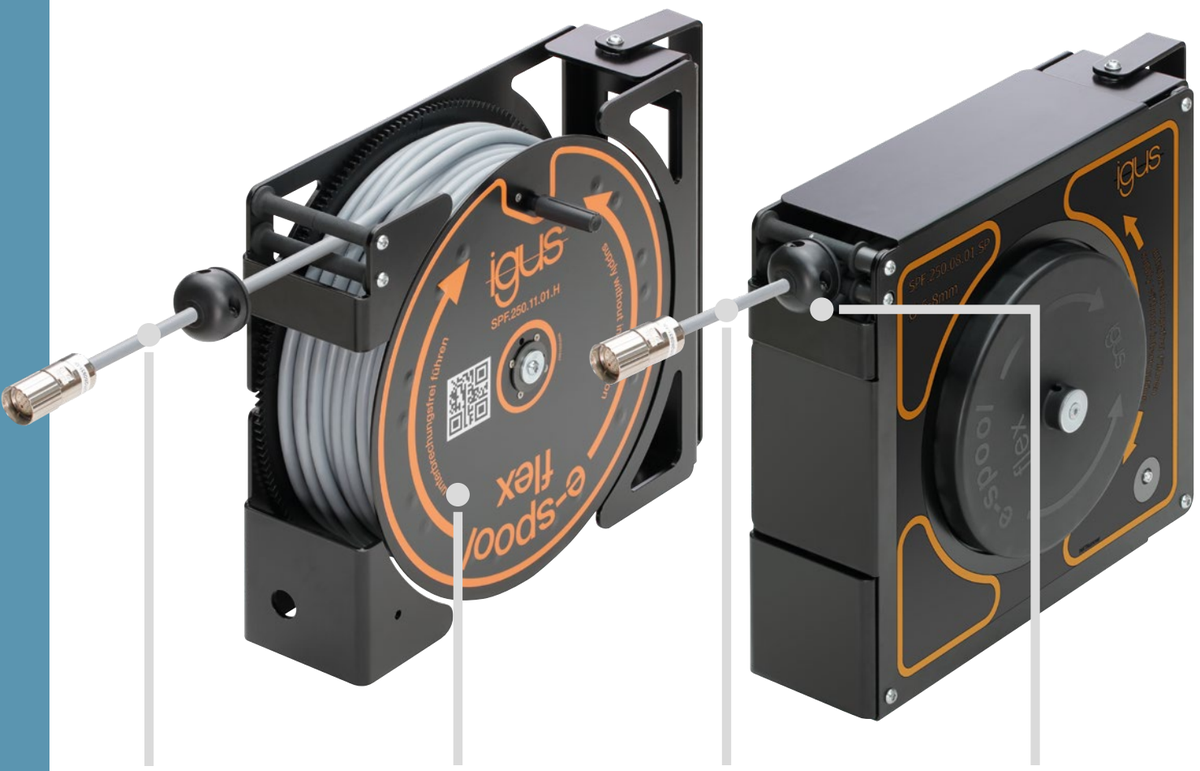

Easy handling: pull-out force is almost constant and secure locking

Without interruption: for energy, data and air

Assembly-friendly: easy replacement of the cable, even with connectors fitted

Space-saving: cable retracts into a compact unit

Continuous panel feed - e-spool® flex 2.0

The e-spool® flex 2.0 is the igus® cable drum without a slip ring. Cables diameters from 5mm to 15mm can be used. The cable is always safely routed through a feed-through to ensure that it is properly wound up at all times.

Benefits

- Without interruption (no slip ring), for energy, data, and air
- Space-saving
- Universal assembly in customer structures
- Constant tensile strain on the cable
- Locking mechanism
- Available with 3 drive options

Typical application areas

- Can be used wherever a cable must move freely during use and must be stowed away safely after use
- Control pendants for robots
- Cable retraction system for workshops, measuring and production areas

Product range

Part No. SPF	Cable diameter from - to max. [mm]	Max. extension length [m]	Required cable length inside the chain [mm]	Weight [kg]
SPF.250.08.01.□*	5 - 8	15	4.5	≈ 8.0
SPF.250.11.01.□*	8 - 11	10	3.3	≈ 8.0
SPF.250.15.01.□*	11 - 15	5	2.4	≈ 8.0

*Part can be combined with three different drives (Index H/SP/SB).

Order key

SPF.250.11.01.SP

Series / Type	Disc diameter	Cable diameter	Version	Drive type

Order example:
Complete Part No. with index □ of required drive:
- H for retraction with a hand crank
- SP for retraction with a retaining spring and locking mechanism
- SB for retraction with a spring, locking mechanism and retraction brake

Installation dimensions

Part No. SPF	A [mm]	B [mm]	C [mm]
SPF.250.08.01.H	414	350.5	137
SPF.250.08.01.SP / .SB	448	388.5	133
SPF.250.11.01.H	414	350.5	152.6
SPF.250.11.01.SP / .SB	448	388.5	149
SPF.250.15.01.H	424	350.5	170
SPF.250.15.01.SP / .SB	414	350.5	166

Note: The spring versions are provided with a ratchet. The locking mechanism can be removed subsequently.

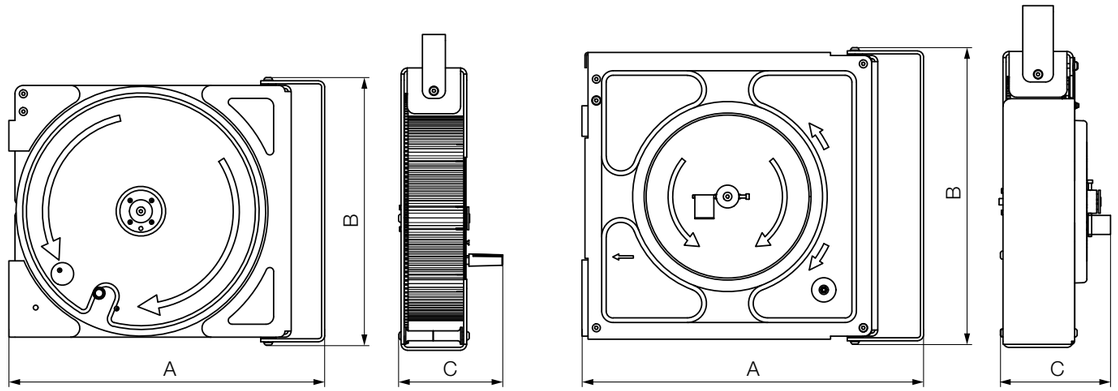

Note: Please consider VDE 0298 part 4 (current carrying capacity and conversion factors for wound cables) when selecting your cables and using e-spool® flex light 2.0.



Easy handling: pull-out force is almost constant and secure locking

Without interruption: for energy, data and air

Assembly-friendly: easy replacement of the cable, even with connectors fitted

Space-saving: cable retracts into a compact unit

For small installation spaces - e-spool® flex mini

The e-spool® flex mini is the smallest igus® cable drum without a slip ring. Cables diameters from 5mm to 7mm can be used. The cable is always safely routed through a feed-through to ensure that it is properly wound up at all times.

Benefits

- No slip ring
- Without interruption (no slip ring), for energy, data, and air
- Space-saving
- Universal assembly
- Constant tensile strain on the cable
- Cost-effective
- Easy in case of repair

Typical application areas

- Control panels
- Robotics and automation
- Office furniture industry

Product range

Part No. SPF mini	Cable diameter from - to max. [mm]	Max. extension length [m]	Required cable length inside the chain [mm]	Weight [kg]
SPF.120.07.01.SP*	5 - 7	3	1.1	≈ 2.3
SPF.120.07.01.SPL*	5 - 7	3	1.1	≈ 2.3

*Index SP = with a retaining spring and locking mechanism / Index SPL = with a spring and ratchet lever

Order key

SPF.120.07.01.SP

Series / Type	Disc diameter	Cable diameter	Version	Drive type

Order example:
The index ☐ corresponds to the required drive type:
SP for retraction with a spring and locking mechanism
SPL for retraction with a spring and ratchet lever

Installation dimensions

Part No. SPF mini	A [mm]	B [mm]	C* [mm]	D [mm]
SPF.120.07.01.SP	181	194	–	80
SPF.120.07.01.SPL	181	194	8	80

*Ratchet lever only for **SPL**

Note: The spring versions are provided with a ratchet. The locking mechanism can be removed subsequently.

Ratchet lever

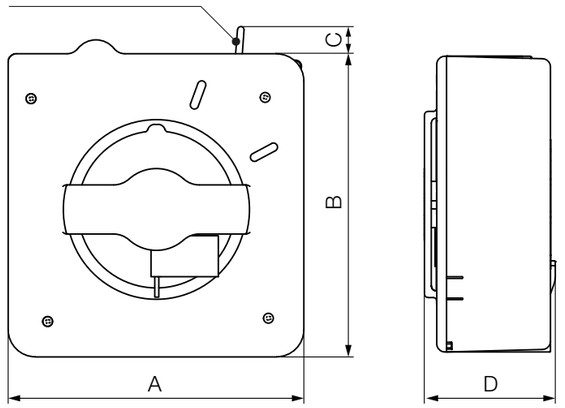

Note: Please consider VDE 0298 part 4 (current carrying capacity and conversion factors for wound cables) when selecting your cables and using e-spool® flex light 2.0.

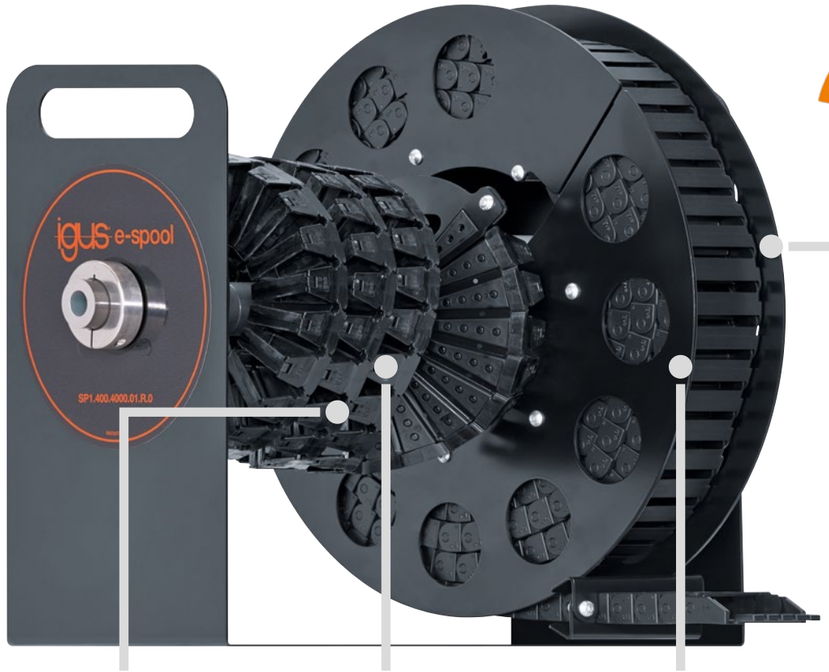

ENERGY
DATA
AIR
LIQUIDS
GUIDANCE
IN ONE SYSTEM

Flexible use:
energy supply in any direction is possible

Cost-effective:
twisterband enables rotary movement

Flexible:
guidance of different media in one system

Space-saving:
e-chain® retracts into a compact unit

Space-saving and spring-driven - e-spool® compact

The compact e-spools® for 2m and 4m extension are optimised for small installation spaces with smaller linear chains and twisterbands for a wide range of applications. As with the larger standard and HD systems, the compact e-spool® systems enable trouble-free guidance and flexible filling.

Benefits

- Different media (power, data, air and fluids) can be routed together in one system
- Energy supply in all directions
- Space-saving and virtually "invisible"
- Very lightweight design (SP1.240 series made from aluminium)
- Extension lengths up to 2m and 4m
- Cables can be retrospectively added or changed

Typical application areas

- Manual workplaces
- Workstations
- Assembly lines

Product range | With e-chain® and 1 twisterband

Part No. e-spool® with 1 twisterband, extension right or left	*Bi* [mm]	*hi* [mm]	Max. travel distance [m]	Inner radius *R* max.* [mm]	Outer radius *R* max.* [mm]	Max. cable ø [mm]	Weight [kg]
SP1.240.2000.01.R / L.0	23	9	2	24	35	7	≈ 3.30
SP1.400.4000.01.R / L.0	44	15	4	34	57	12	≈ 13.5
SPHD1.400.4000.01.R.0	44	15	4	34	57	12	≈ 17.2

*The max. bend radii in the inner radius and the outer radius should be observed.

Order key

SP1.240.2000.01.R.0

e-spool® with 1 twisterband	Drum diameter	Extension length	Version	Extension R / L	Colour index

Order example:
The index R / L corresponds to the extension direction:
SP1.240.2000.01.R.0 = e-spool® compact with a single twisterband with 240mm drum diameter and 2,000mm maximum extension length, extension right.
Order index for colour options ▶ **www.igus.eu/info-colours**

Interior separation | For twisterband

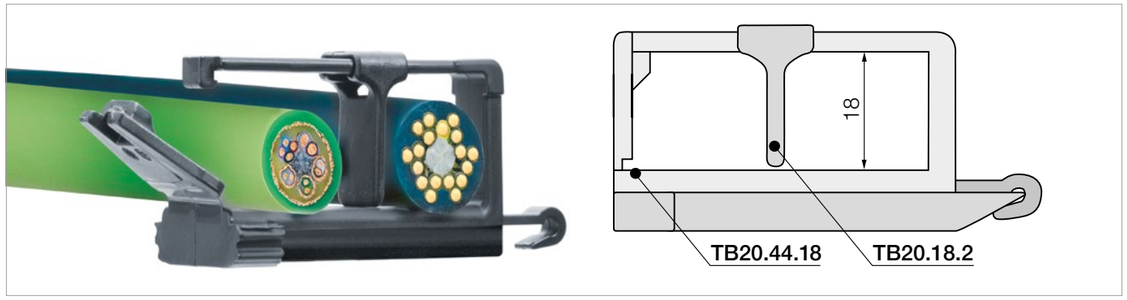

Note: Separators are delivered unassembled. Simply pushed onto the openable crossbar. Separators are assembled every 4th e-chain® link.

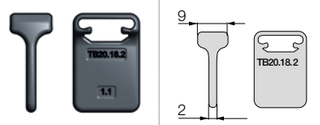

Part No. Separator for TB20.44.18
unassembled **TB20.18.2**

Interior separation for twisterband
To fit, simply open the e-chain®, insert a cable and press the separator onto the crossbar.

Theatre, stage and lighting technology: the e-spool® systems mentioned here do not meet the DIN EN 17206 guidelines for stage and theatre operations. If you have questions about this, please contact igus®.

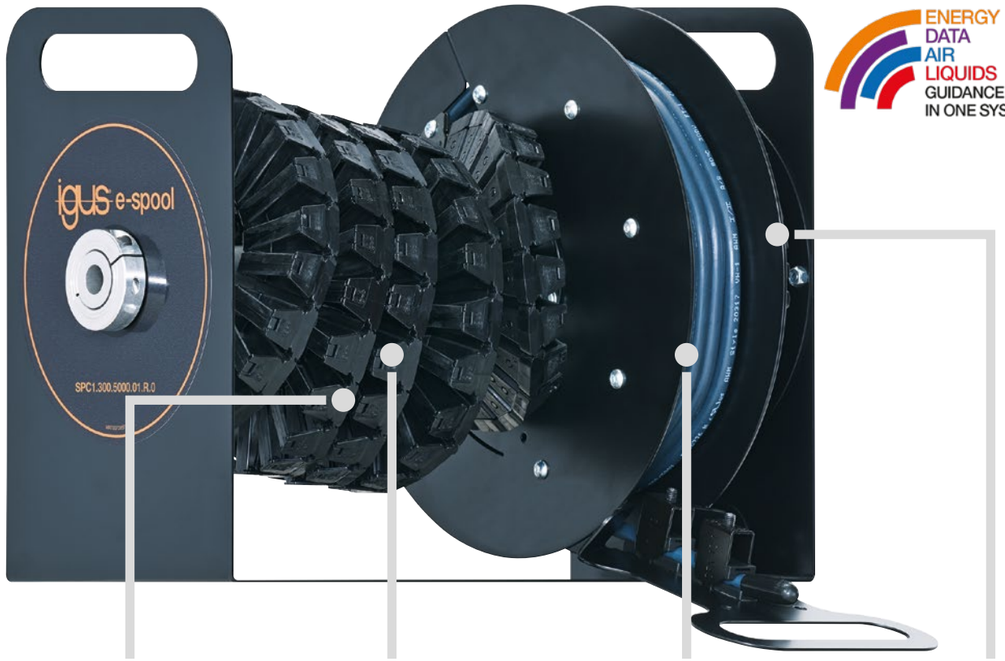

Flexible use:
energy supply in any direction is possible

Locking:
inertia locking function

Flexible:
for routing of a single cable or hose

Space-saving:
cable retracts neatly when not in use, paths remain free

Cable or hose pulled out by hand - e-spool® for manual operation

The manually operated e-spool® is designed for applications where only one cable or hose is pulled out by hand. The operator pulls out the cable to the required length for a control pendant or tool and can be retracted again after use. To prevent the cable from being under tension all the time, an inertia reel is fitted. In this way, the extension length can be locked. An extension length of up to 5m can be insert achieved.

Benefits

- For applications where one cable or hose is pulled out manually
- Compact, space-saving cable drum without slip ring
- Integrated ratchet to lock/release the retraction (similar to a vacuum cleaner cable)
- Also suitable for media or air hoses
- Handle with mounting option and strain relief

Typical application areas

- Robot teach pendants
- Workstations
- Assembly lines

Product range | With e-chain® and 1 twisterband

Part No. e-spool® with 1 twisterband, extension right	*hi* [mm]	Max. travel distance [m]	Bend radius *R* max.* [mm]	Max. cable ø [mm]	Weight [kg]
SPC1.300.5000.01.R.0	18	5	57	12	≈ 12.5

*The max. bend radius should be observed.

Order key

SPC1.300.5000.01.R.0

e-spool® with 1 twisterband	Drum diameter	Extension length	Version	Extension R / L	Colour index

Order example:
The index R corresponds to the extension direction:
SPC1.300.5000.01.R.0 = e-spool® for manual operation with a single twisterband with 300mm drum diameter and 5,000mm maximum extension length, extension right.
Order index for colour options ▶ **www.igus.eu/info-colours**

Interior separation | For twisterband

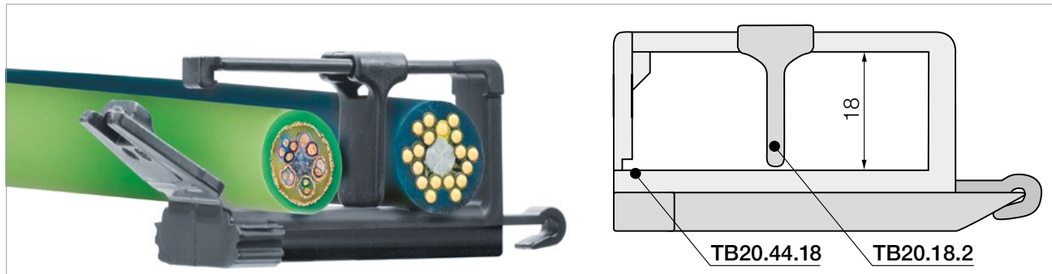

Note: Separators are delivered unassembled. Simply pushed onto the openable crossbar. Separators are assembled every 4th e-chain® link.

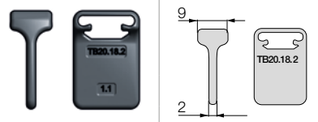

Part No. Separator for TB20.44.18 unassembled	TB20.18.2

Interior separation for twisterband

To fit, simply open the e-chain®, insert a cable and press the separator onto the crossbar.

ENERGY DATA AIR LIQUIDS GUIDANCE IN ONE SYSTEM



Flexible use:
energy supply in any direction is possible

Cost-effective:
HD twisterband enables rotary movement

Flexible:
guidance of different media in one system

Space-saving:
e-chain® retracts into a compact unit

Flexible use - igus® e-spool® standard and HD

With igus® e-spools®, cables are wound up in an e-chain® to save space. Various media can be supplied without interruption by the use of the twisterband. Adjustments and extensions of the filling are also possible at any time afterwards. If the e-chain® extension is vertically upwards, igus® recommends the standard e-spool®. For vertical downwards, please use the HD version. For horizontal pull-out direction, the choice of system depends on the application. To select the right system, please get in touch with igus®.

Benefits

- Flexible energy supply - guidance of different media in one system
- No tensile strain on the cables
- Cables can be retrospectively added or changed

Typical application areas

- Telescopic applications
- Theatre, stage and lighting technology
- Space-saving alternative to zig-zag solutions

Standard product range | With e-chain® and 1 or 2 twisterbands

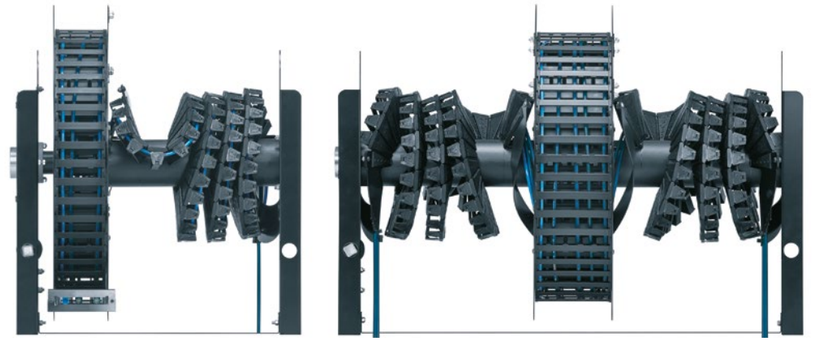

e-spool® standard
Picture left:
with 1 twisterband
Picture right:
with 2 twisterbands

Part No. e-spool® with 1 twisterband, extension right or left	*Bi* [mm]	*hi* [mm]	Max. travel distance [m]	Inner radius *R* max.** [mm]	Outer radius *R* max.** [mm]	Max. cable ø [mm]	Weight [kg]
SP1.600.4000.03.R / L.0*	75	21	4	44	77	17	≈ 33.0
SP1.700.7000.03.R / L.0*	75	21	7	44	77	17	≈ 38.0
SP1.850.14000.03.R / L.0*	75	21	14	44	77	17	≈ 48.0

*Index **R** = extension right / *Index **L** = extension left

**The max. bend radii in the inner radius and the outer radius should be observed.

Part No. e-spool® with 2 twisterbands, extension right or left	*Bi* [mm]	*hi* [mm]	Max. travel distance [m]	Inner radius *R* max.** [mm]	Outer radius *R* max.** [mm]	Max. cable ø [mm]	Weight [kg]
SP2.600.4000.03.R / L.0*	125	21	4	44	77	17	≈ 40.0
SP2.700.7000.03.R / L.0*	125	21	7	44	77	17	≈ 45.0
SP2.850.14000.03.R / L.0*	125	21	14	44	77	17	≈ 55.0

*Index **R** = extension right / *Index **L** = extension left

**The max. bend radii in the inner radius and the outer radius should be observed.

Note: If the e-chain® extension is vertically upwards, igus® recommends the standard e-spool®. For vertical downwards, please use the HD version. For horizontal pull-out direction, the choice of system depends on the application. To select the right system, please get in touch with igus®.

Order key

SP1.600.4000.03.L.0

e-spool® with 1 twisterband	Drum diameter	Extension length	Version	Extension R / L	Colour index

Order example:
The index R / L corresponds to the extension direction:
SP2.600.4000.03.L.0 = e-spool® standard
with 2 twisterbands, 600mm drum diameter,
4,000mm maximum extension length, extension left.
Order index for colour options ▶ **www.igus.eu/info-colours**

e-spool® HD | SPHD1 / SPHD2

HD product range | With e-chain® and 1 or 2 twisterbands

For vertical applications, downwards

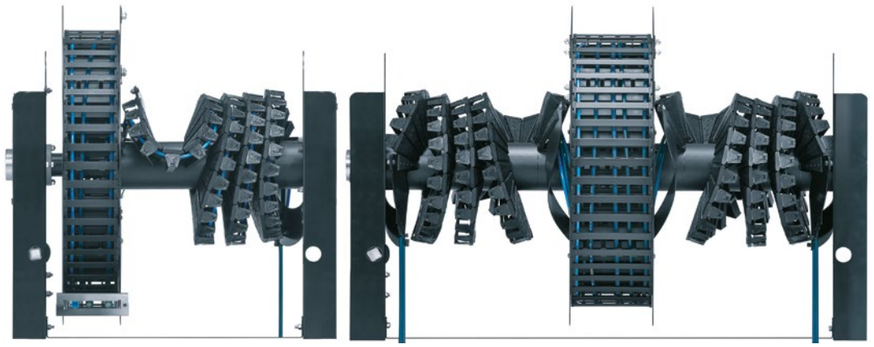

e-spool® HD
Picture left:
with 1 twisterband
Picture right:
with 2 twisterbands

Part No. e-spool® with 1 twisterband, extension right or left	*Bi* [mm]	*hi* [mm]	Max. travel distance [m]	Inner radius *R* max.** [mm]	Outer radius *R* max.** [mm]	Max. cable ø [mm]	Weight [kg]
SPHD1.600.4000.03.R/L.0*	75	21	4	44	77	17	≈ 52.0
SPHD1.700.7000.03.R/L.0*	75	21	7	44	77	17	≈ 56.5
SPHD1.850.14000.03.R/L.0*	75	21	14	44	77	17	≈ 67.0

*Index **R** = extension right / *Index **L** = extension left

**The max. bend radii in the inner radius and the outer radius should be observed.

Part No. e-spool® with 2 twisterbands, extension right or left	*Bi* [mm]	*hi* [mm]	Max. travel distance [m]	Inner radius *R* max.** [mm]	Outer radius *R* max.** [mm]	Max. cable ø [mm]	Weight [kg]
SPHD2.600.4000.03.R/L.0*	125	21	4	44	77	17	≈ 59.0
SPHD2.700.7000.03.R/L.0*	125	21	7	44	77	17	≈ 64.0
SPHD2.850.14000.03.R/L.0*	125	21	14	44	77	17	≈ 74.0

*Index **R** = extension right / *Index **L** = extension left

**The max. bend radii in the inner radius and the outer radius should be observed.

Order key

SPHD1.850.7000.03.**R**.0

e-spool® with 1 twisterband	Drum diameter	Extension length	Version	Extension R / L	Colour index

Order example:
The index R / L corresponds to the extension direction:
SPHD1.850.7000.03.R.0 = e-spool® standard
with a single twisterband, 850mm drum diameter,
7,000mm maximum extension length, extension right.
Order index for colour options ► **www.igus.eu/info-colours**

Theatre, stage and lighting technology: the e-spool® systems mentioned here do not meet the DIN EN 17206 guidelines for stage and theatre operations. If you have questions about this, please contact igus®.

e-spool® standard and HD

Interior separation | For E2/000 e-chains®

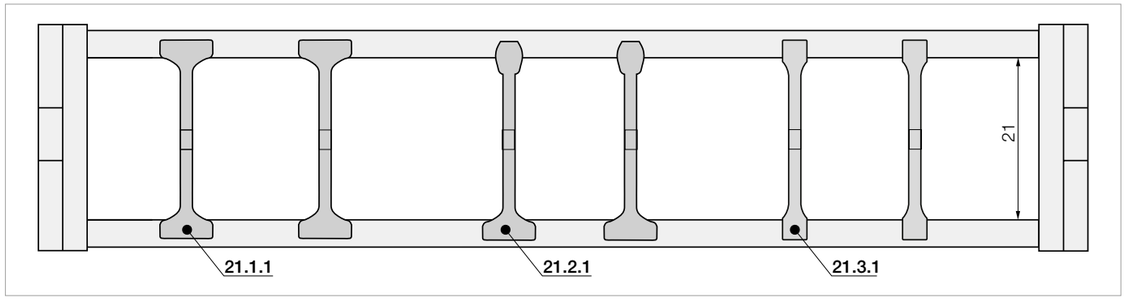

No lateral gap to side links necessary.
As standard separators are fitted every 2nd e-chain® link!

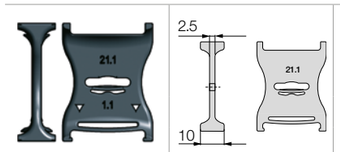

Part No. Standard separator
unassembled **21.1**
assembled **21.1.1**

For all applications
Standard separator with a wide base for maximum holding force.

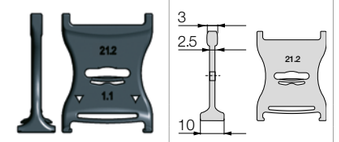

Part No. Separator, narrow top
unassembled **21.2**
assembled **21.2.1**

For even faster installation
Wide on one side for high holding force, narrow on opposite side for easy cable fitting.

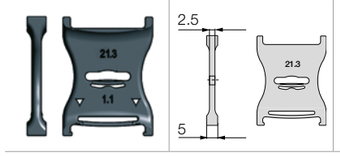

Part No. Separator, narrow
unassembled **21.3**
assembled **21.3.1**

For a large number of thin cables
Separator with a narrow base for a large number of thin cables side by side. Saves space.

Interior separation | For twisterband



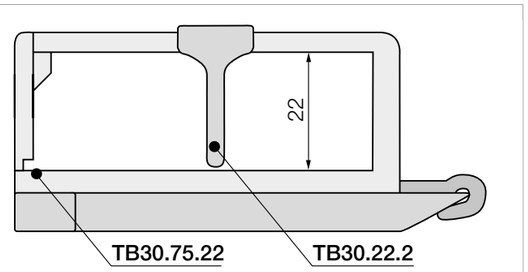

Note: Separators are delivered unassembled. Simply pushed onto the openable crossbar. Separators are assembled every 4th e-chain® link.

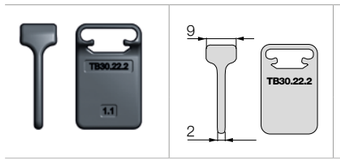

Part No. Separator for TB30.75.22
unassembled **TB30.22.2**

Interior separation for twisterband
To fit, simply open the e-chain®, insert a cable and press the separator onto the crossbar.

e-spool® power | Advantages

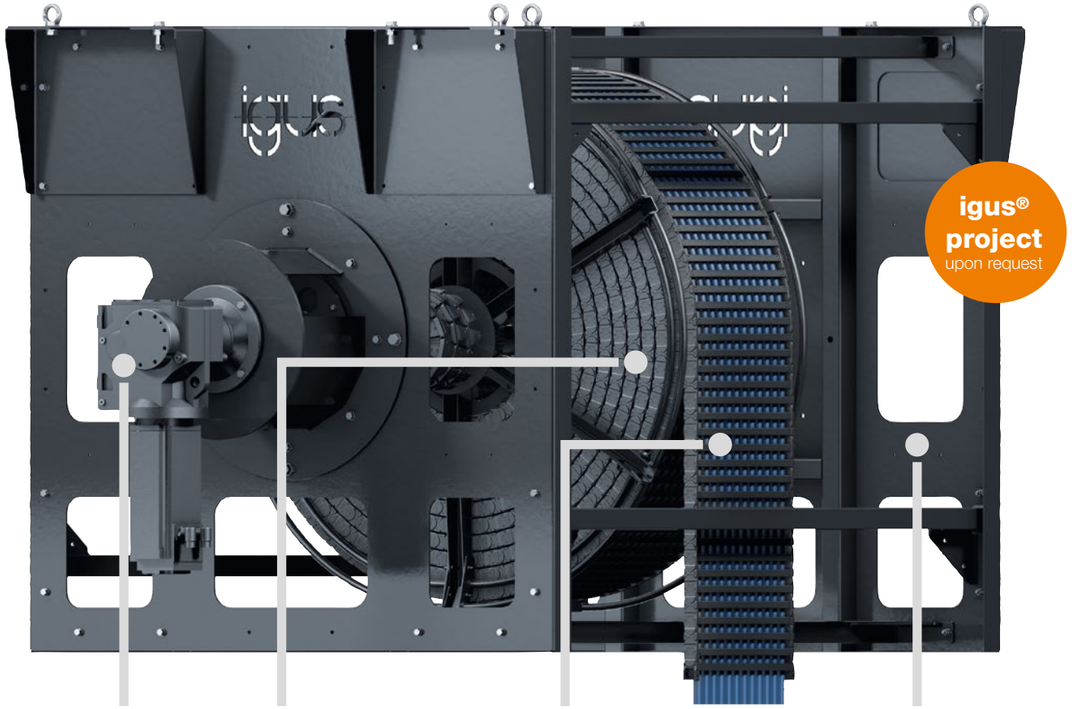

Motor-driven: extension lengths of up to 25m possible

Flexible: guidance of different media in one system

Space-saving: e-chain® retracts into a compact unit

Optional control system: plug & play controller, developed by igus®

Motor-driven for long extension lengths - e-spool® power

The e-spool® power is a motor-driven e-spool® for travels of up to 25m. Like all e-spool® systems, it can be filled with various cables and hoses and ensures reliable transmission with no breaks or slip rings. An igus® controller, which adapts dynamically to the travel speed, was specially developed for vertically hanging applications in theatres and opera houses and can be ordered as an option.

Benefits

- Travel distances up to 25m (longer distances upon request)
- Solid tubular steel construction
- Flexible filling with electrical and fibre optic cables, and pneumatic hoses
- Future-proof, additions and upgrades possible
- No tensile strain on the cables

Typical application areas

- Theatre, stage and lighting technology
- Indoor and outdoors cranes

ENERGY
DATA
AIR
LIQUIDS
GUIDANCE
IN ONE SYSTEM

Note: This type of system should be designed in conjunction with our engineering team.
Please contact us at ▶ **www.igus.eu/contact**

e-spool® | Guidelines

Guidelines for e-spool®

In view of the special mechanical stress inside an e-spool®, we recommend using igus® chainflex® cables. We also recommend that the following guidelines are observed:

1. Only put cables side by side in the linear chain - never stack them!
2. Where possible, chainflex® cables with a TPE outer jacket should be used for unshielded cables
3. Shielded cables should be chosen from the chainflex® CFROBOT range
4. The maximum bend radius of the twisterband must be accounted for
5. Where possible, use separators to protect cables against cross-over and abrasion against each other. To make the best possible use of the interior space, install the separator in alternate links
6. Insert cables sorted by diameter and/or bend radius - insert small ones in the centre then increasingly larger ones towards the outside
7. Apply strain relief to both ends of the cable - when using a cable tie for strain relief, please ensure the head of the cable tie is underneath to avoid cable damage
8. The cables should be installed in the twisterband with clearance space both outwards and inwards from the rotary axis

Installation instructions

For applications that move horizontally, a smooth surface is required for the e-chain® to travel over.

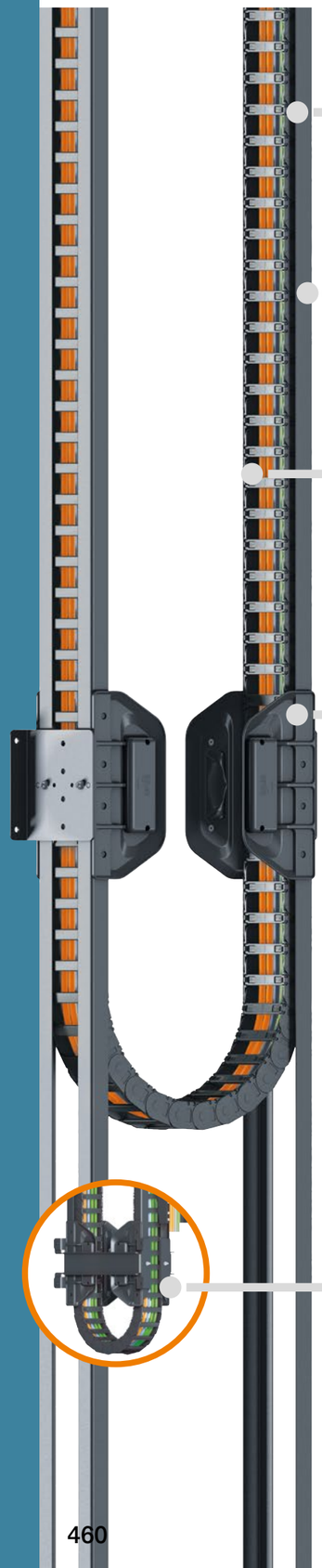

Safe vertical guidance - guidelok slimline P and P.S

More cost-effective, lighter and even easier to install. guidelok slimline "P" and "P.S" plastic guide troughs for vertical applications, especially for all types of storage and retrieval units; now with even lighter components and simplified installation. Locking lever and guide rails prevent the energy chain from swaying or swinging outwards.

Benefits

- Significant savings in costs and weight when compared with a complete housing
- Now also for particularly narrow lanes
- For hanging systems up to 50m
- Fast, safe and easy assembly with plug-in guide rails
- Reduced noise
- Easy access for servicing
- Energy, data and all kinds of media can be safely guided

Typical application areas

- Storage and retrieval units
- Construction and crane lifts
- Automated car parks
- Ship lifts
- Automatic mini-load system

Selection table

Part No.	Inner width *Bi* [mm]	Inner height *hi* [mm]	Bend radius *R* [mm]	For e-chain® series	Page
P version - safe vertical guidance					
GLSL.P	75 - 150	35	150 - 250	2600 / 2700	**462**
P.S version - for narrow lanes					
GLSL.P.S	100 - 150	35	150 - 250	2600 / 2700	**463**

Special versions with different widths, radii and channel section lengths possible. please consult igus® for delivery time.

Technical data

General properties	
Speed vertical	≤ 7.0 m/s
Acceleration	≤ 10m/s²

Note: This type of system should be designed in conjunction with our engineering team.
All information on this page is for guidance only.
Please contact us at ▶ **www.igus.eu/contact**

Vertical energy supply has proven itself in storage and retrieval units from SIVAplan



Logistics specialist relies on guidelok energy chain system for hanging cable guidances SIVAplan GmbH & Co. KG is a specialist for sophisticated storage systems, especially for food logistics. SIVAplan has tested an igus® energy supply system for its storage and retrieval units, which saves weight and, above all, can be installed much faster. Meanwhile, the "guidelok slimline P" system from the motion plastics® specialist igus® has proven itself in series production.

guidelok slimline | Series GLSL.P

Product range

Part No.	Width index	Inner height *hi* [mm]	Bend radius *R* [mm]	Travel height [m]
Series GLSL.P				
GLSL.P.2700.[*].[R].[LLLL]/[FFFF]	07 / 10 / 12 / 15	35	150 / 175 / 200 / 250	50

[*] = width index, [R] = bend radius, [LLLL] = total length, [FFFF] = channel section length.

Installation dimensions

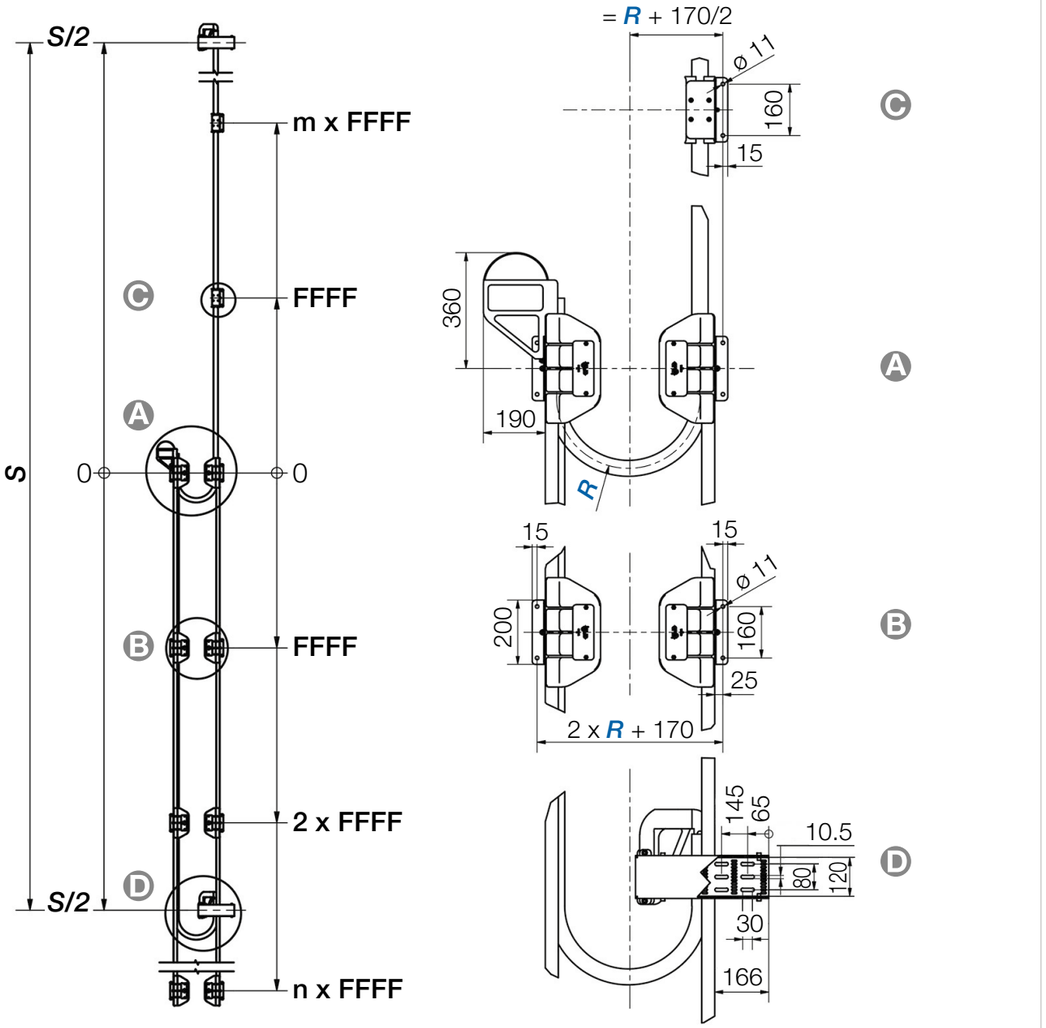

Note: This type of system should be designed in conjunction with our engineering team.
All information on this page is for guidance only.
Please contact us at ▶ **www.igus.eu/contact**

guidelok slimline | Series GLSL.P.S

Product range

Part No.	Width index	Inner height *hi* [mm]	Bend radius *R* [mm]	Travel height [m]
Series GLSL.P.S				
GLSL.P.S.2700.[*].[R].[LLLL]/[FFFF]	10 / 12 / 15	35	150 / 175 / 200 / 250	50

[*] = width index, [R] = bend radius, [LLLL] = total length, [FFFF] = channel section length.

Installation dimensions

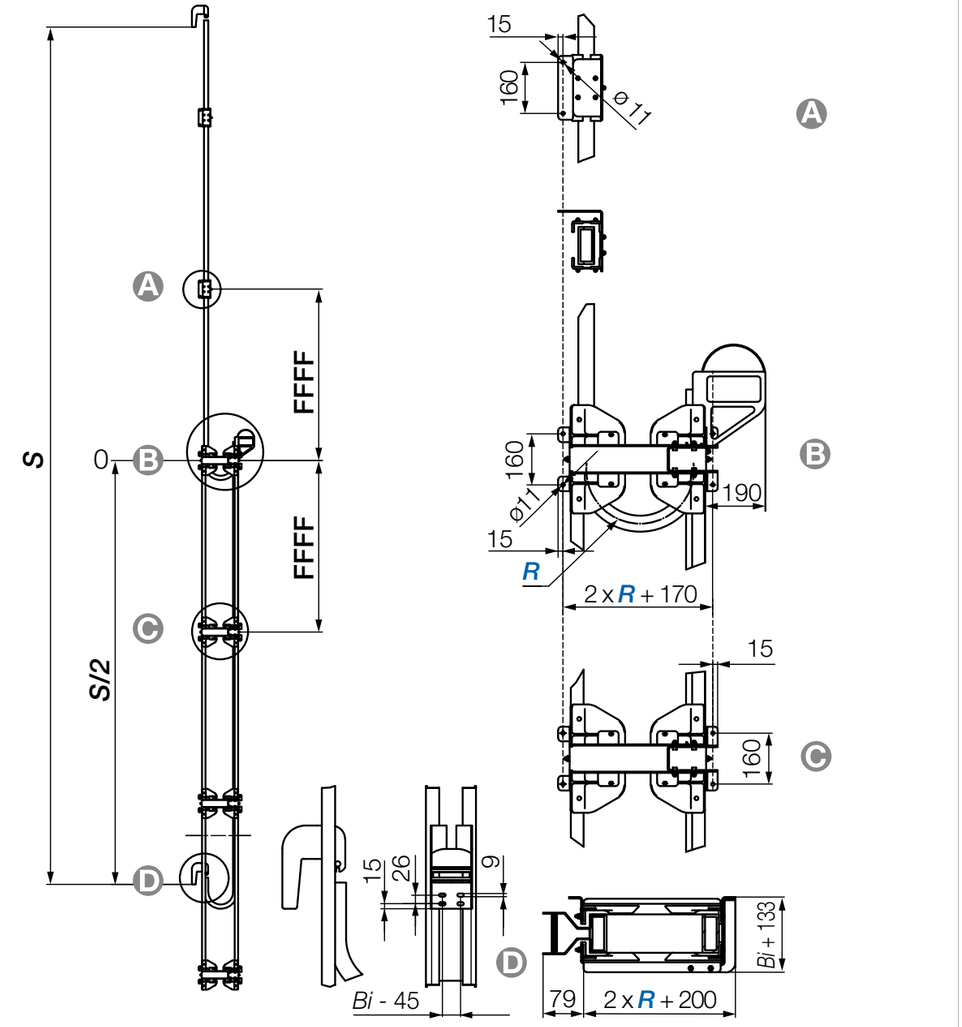

Note: This type of system should be designed in conjunction with our engineering team.
All information on this page is for guidance only.
Please contact us at ▶ **www.igus.eu/contact**

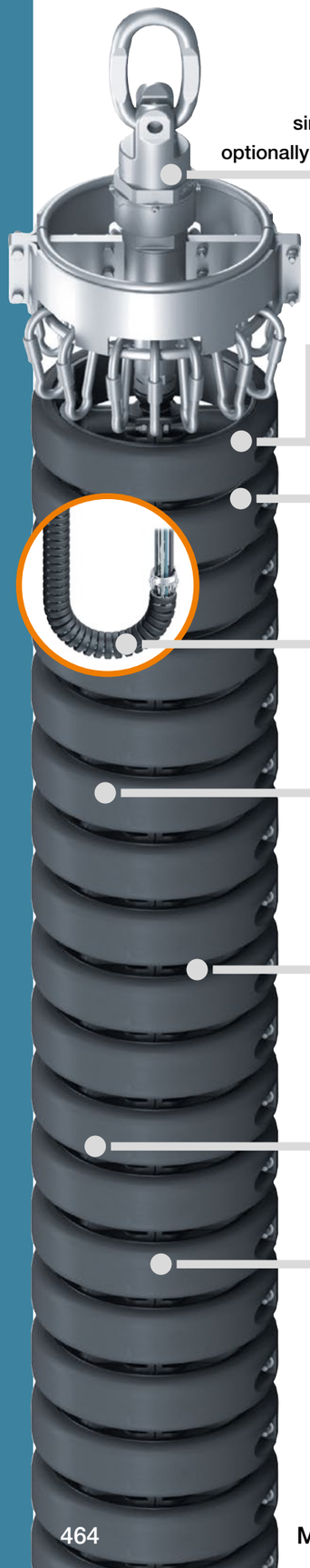

Safe cable guidance for hanging applications - e-loop®

To guide cables safely in hanging applications, igus® has developed the e-loop® as an alternative to the service loop - perfectly suited for multi-axis applications. The e-loop® combines the advantages of a plastic energy chain with those of a high-strength pull rope. Inside the e-chain®, the pull rope transfers the tensile force to the hook-type mounting brackets and the structure. The cable package inside the e-loop® thus only carries its own weight. The modular e-chain® made of high-performance plastic always provides a defined bend radius and easily copes with vibration and impacts.

Benefits

- Alternative to the service loop - available as a dynamic version with crossbars every link and as a static version with crossbars every 2nd link, e.g. on the cable routing from the drilling rig down to the drill floor
- Maximum cable or hose diameters: 108mm
- Secondary locking tension for all bolted connections offers great operational reliability
- Hook-type mounting brackets also available in stainless steel

Typical application areas

- Offshore
- Oil and gas industry
- Shore power connections
- Construction machinery
- Wind turbines

Selection table

Part No.	Inner width *Bi* [mm]	Outer width *Ba* [mm]	Bend radius *R* [mm]	Max. cable ø [mm]	Fill weight [kg/m]1)	Page
D / TD versions - dynamic, crossbars every link - for all moving applications						
ELP.220	150	220	380	38	50	**466**
ELP.300	230	300	500	75	50	**467**
ELP.TD.300*	230	300	500	75	50	**468**
ELP.430	360	430	680	108	70	**469**
S version - static, with crossbars every 2nd link - for purely static cable guidance						
ELP.220	150	220	175	38	50	**466**
ELP.300	230	300	210	75	50	**467**

*ELP.TD - available with four-piece design for even faster assembly. Optimised for top drives.

1) Max. fill weight per metre for chain lengths of up to 50m.

Technical data

General properties	
Speed	≤ 3.0 m/s
Acceleration FL_B	≤ 2.5 m/s²
Permitted temperature °C	-30°C / +50°C

Note: This type of system should be designed in conjunction with our engineering team.
All information on this page is for guidance only.
Please contact us at ▶ **www.igus.eu/contact**

Further solutions for shore power

e-dispenser - reduces costs and is environmentally friendly

- Modular and compact system
- Modular system: ready-to-install triflex® R e-chains® energy supply unit incl. cables & connectors; optional: drive; optional: additional steel structure
- Flexible in terms of extension length and installation options
- Fail-safe thanks to cable protection with TRC.125 triflex® R e-chain®
- Defined minimum bend radius

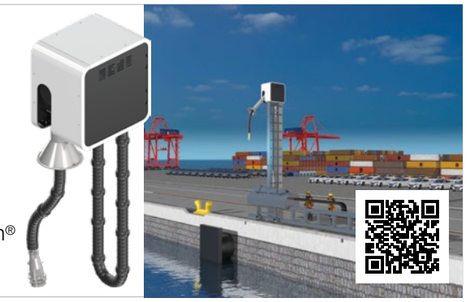

e-loop® | Series ELP.200

Product range



Part No. dynamic, crossbars every link	Part No. static, with crossbars every 2nd link	Inner width *Bi* [mm]	Outer width *Ba* [mm]	Bend radius *R* [mm]	Max. cable ø [mm]	Max. fill weight [kg/m]1)	Version .D [kg/m]	Version .S [kg/m]
ELP.220.01.D	**ELP.220.01.S**	150	220	380	38	50	≈ 18.0	≈ 11.0

1) Max. fill weight per metre for chain lengths of up to 50m.

Installation dimensions | Overview

2-chamber design interior separation	Standard fastening: hook-type mounting bracket without flange	Special solution: hook-type mounting bracket with flange, optional
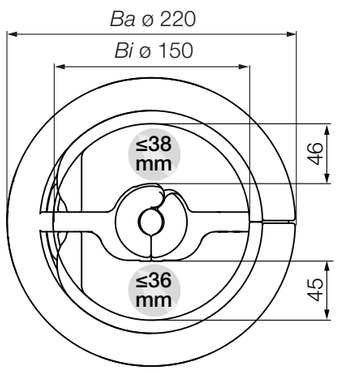	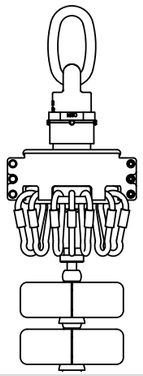	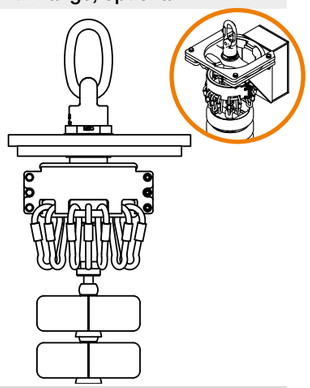

The e-chain® length can be freely chosen.

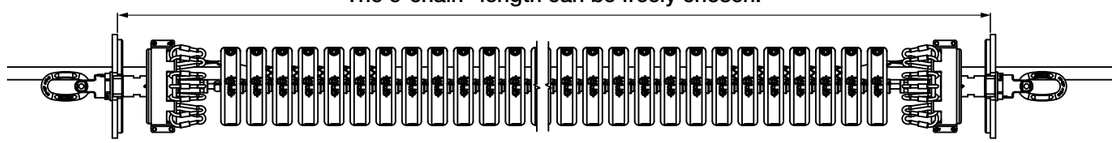

Note: This type of system should be designed in conjunction with our engineering team.
All information on this page is for guidance only.
Please contact us at ▶ **www.igus.eu/contact**

e-loop® | Series ELP.300

Product range

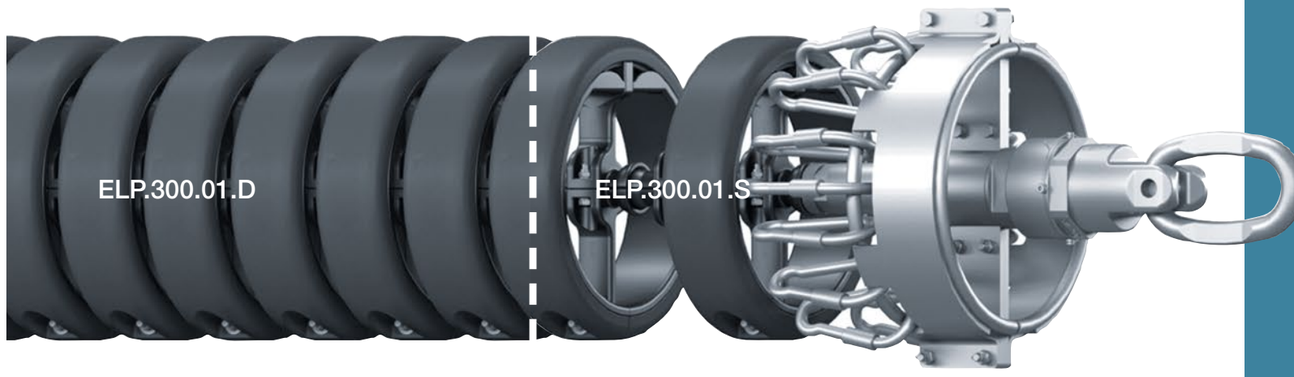

Part No. dynamic, crossbars every link	Part No. static, with crossbars every 2nd link	Inner width *Bi* [mm]	Outer width *Ba* [mm]	Bend radius *R* [mm]	Max. cable ø [mm]	Max. fill weight [kg/m]1)	Version .D [kg/m]	Version .S [kg/m]
ELP.300.01.D	**ELP.300.01.S**	230	300	500	75	50	≈ 22.0	≈ 13.0

1) Max. fill weight per metre for chain lengths of up to 50m.

Installation dimensions | Overview

2-chamber design interior separation	Standard fastening: hook-type mounting bracket without flange	Special solution: hook-type mounting bracket with flange, optional
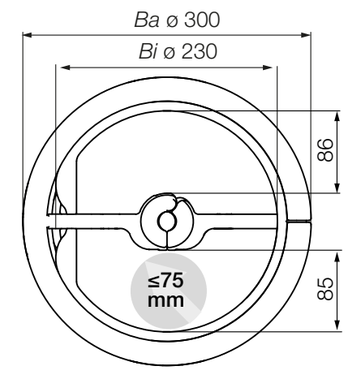	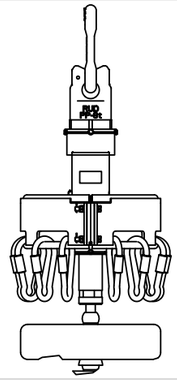	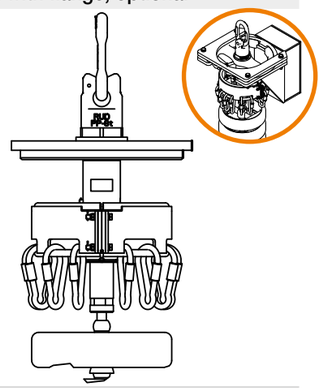

The e-chain® length can be freely chosen.

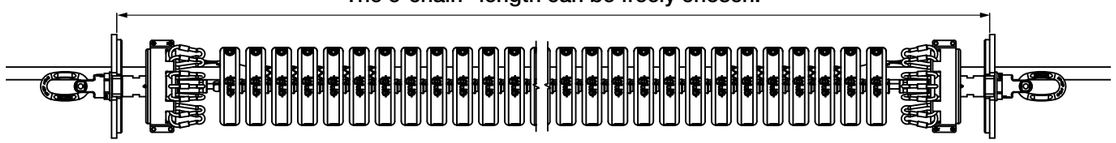

Note: This type of system should be designed in conjunction with our engineering team.
All information on this page is for guidance only.
Please contact us at ▶ **www.igus.eu/contact**

e-loop® | Series ELP.TD.300

Product range | Optimised for top drives

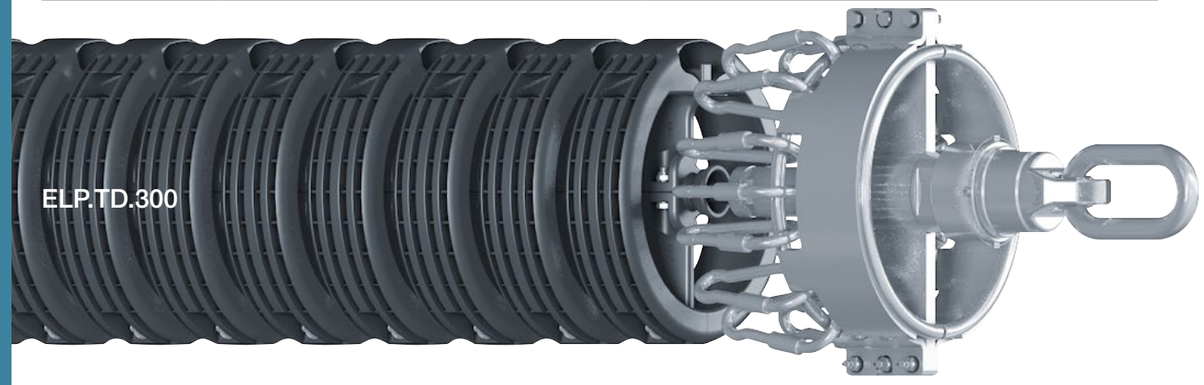

Part No. dynamic, crossbars every link	Inner width *Bi* [mm]	Outer width *Ba* [mm]	Bend radius *R* [mm]	Max. cable ø [mm]	Max. fill weight [kg/m]1)	Version .TD [kg/m]
ELP.TD.300	230	300	500	75	50	≈ 19.0

1) Max. fill weight per metre for chain lengths of up to 50m.

Installation dimensions | Overview

2-chamber design interior separation	Standard fastening: hook-type mounting bracket without flange	Special solution: hook-type mounting bracket with flange, optional

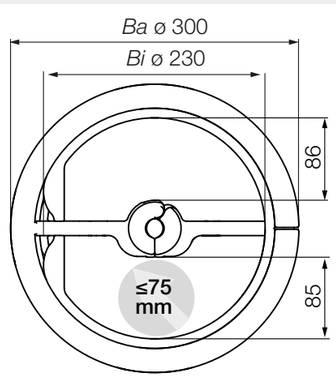

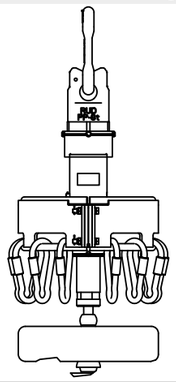

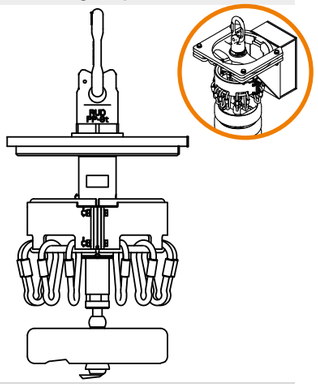

The e-chain® length can be freely chosen.

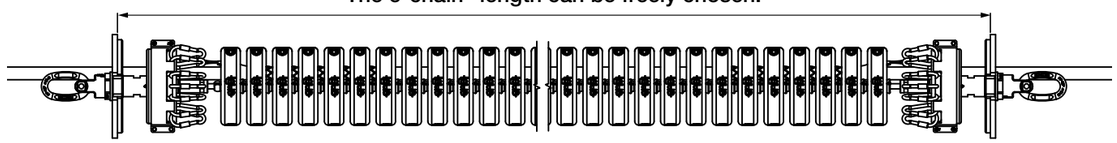

Note: This type of system should be designed in conjunction with our engineering team.
All information on this page is for guidance only.
Please contact us at ▶ **www.igus.eu/contact**

e-loop® | Series ELP.430

Product range

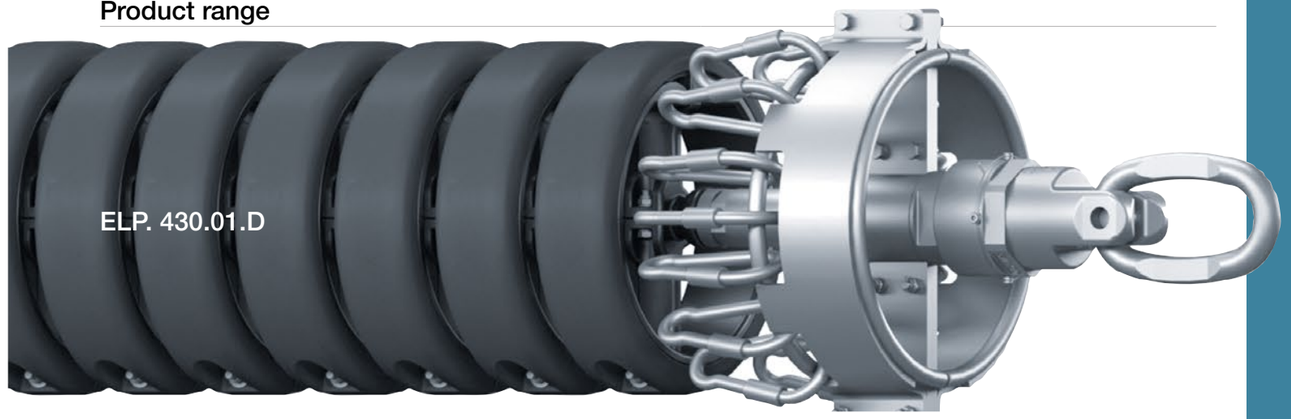

Part No. dynamic, crossbars every link	Inner width *Bi* [mm]	Outer width *Ba* [mm]	Bend radius *R* [mm]	Max. cable ø [mm]	Max. fill weight [kg/m]1)	Version .D [kg/m]
ELP. 430.01.D	360	430	680	108	70	≈ 30.0

1) Max. fill weight per metre for chain lengths of up to 50m.

Installation dimensions | Overview

4-chamber design interior separation	Standard fastening: hook-type mounting bracket without flange	Special solution: hook-type mounting bracket with flange, optional

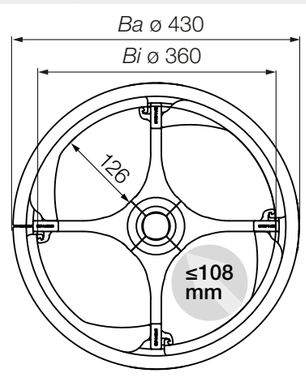

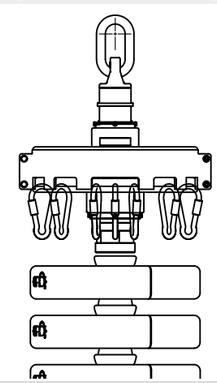

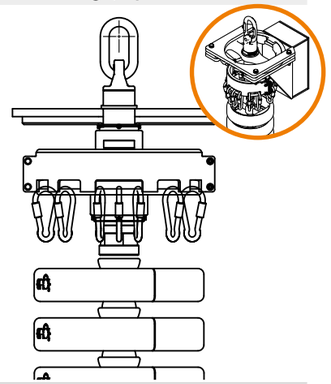

The e-chain® length can be freely chosen.

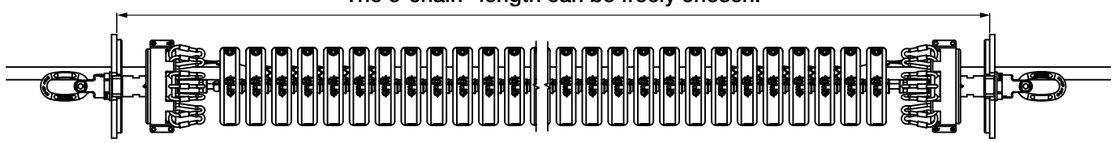

Note: This type of system should be designed in conjunction with our engineering team.
All information on this page is for guidance only.
Please contact us at ▶ **www.igus.eu/contact**

ENERGY
DATA
AIR
LIQUIDS
GUIDANCE
IN ONE SYSTEM

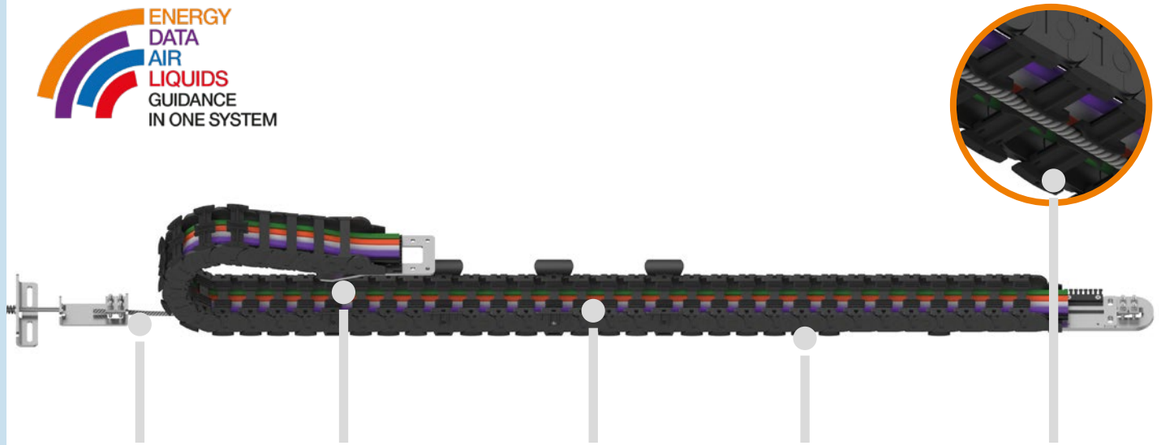

Stays on track: PVC-jacketed steel rope

Smooth running: offset operation of upper and lower run

Secure guidance: comb style autoglide crossbars

High strength: large pin/bore and crossbar with high locking force

Feature: guide element for steel rope

Energy and data transmission installed in 1 hour - autoglide 5

Save up to 88% assembly time with the new cost-effective energy chain for material handling and crane systems. The igus® system autoglide 5 transfers energy, data, fluids and air safely in a single system, is almost maintenance-free and is very cost-effective.

- Energy, data, air and liquids in ONE system
- Often saves two or more other systems needed for transmitting data
- 4m/s speed
- 80m travel
- Quiet operation: 63db(A) at 2m/s
- 50% floor remains free, no guide trough needed
- 88% less assembly time compared to a conventional standard solution with guide troughs
- Available as a harnessed system with cables, hoses and connectors
- Less maintenance and cleaning requirements
- Optional dampening elements - reduce rolling noise and make operation smoother
- Optional fixed end bridge - reduce cable length and save costs
- Optional smart plastics accessories for intelligent condition monitoring and service life display
- Optional fixed end bridge - reverse e-chains® for twice the number of cables

Typical application areas

- Material handling and crane systems
- Alternative to busbar system
- Storage and retrieval units
- Miniloads
- Material handling

Selection table

Part No.	Inner width *Bi* [mm]	Inner height *hi* [mm]	Bend radius *R* [mm]	Travel [m]	Page
E2/000...AG5 - for 2-piece, self-guiding E2/000 e-chains®					
2400...AG5	57 - 77	25	075 - 150	80	**472**
2600...AG5	75 - 100	35	075 - 150	80	**473**
E4.1...AG5 - for 4-piece, self-guiding E4.1 e-chains®					
E4.32...AG5	112 - 262	32	100 - 200	130	**474**
E4.42...AG5	112 - 262	42	125 - 200	130	**475**

Technical data

General properties	
Speed gliding*	≤ 4.0 [m/s]
Acceleration gliding*	≤ 5.0 [m/s²]
Noise during operation	63dB(A) at 2m/s
igumid® G LW material - permitted temperature °C	-40°C/+120°C
Flammability class, igumid® G LW	VDE 0304 IIC UL94-HB

*The values given are maximum values and depend on the travel and fill weight

Note: This type of system should be designed in conjunction with our engineering team.
All information on this page is for guidance only.
Please contact us at ▶ **www.igus.eu/contact**

Further solutions for long travels and self-guiding autoglide e-chain®

autoglide E2/000AG - autoglide self-guiding e-chain®
- Travels up to 60m and travel speeds higher than 2.0m/s
- Very compact, avoids troughs forming an obstacle in the working area
- Quick installation for long travels
- Can be opened along the inner radius



autoglide E4.1AG - autoglide self-guiding e-chains®
- For the larger e-chains® of the E4.1 system
- Simple guide elements for quick installation
- The autoglide crossbars safely guide the e-chain® replacing the need for a guide trough



autoglide 5 | Series 2400AG5

Product range

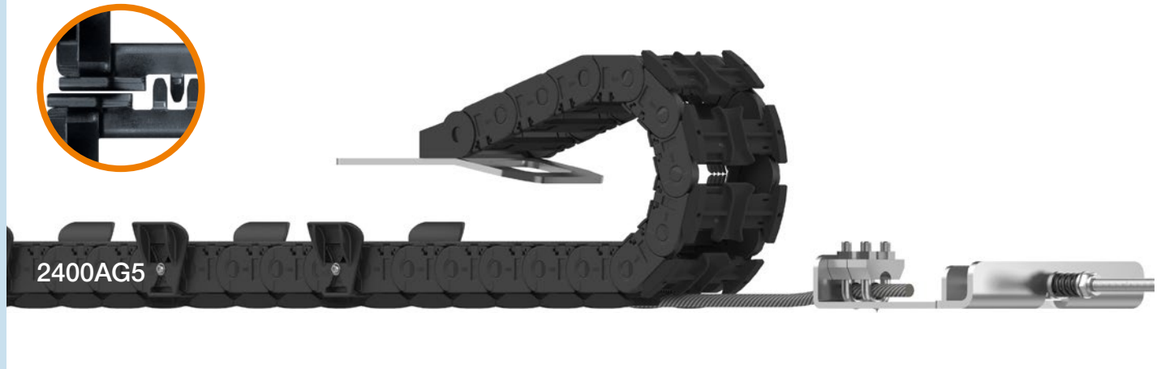

Part No. Available widths	*Bi* [mm]	*Ba* [mm]	Available bend radii *R* [mm]	Dimensions A [mm]	Dimensions B [mm]	Weight e-chain® [kg/m]	Weight steel rope [kg/m]
Series 2400, inner height 25mm							
2400.05AG5	57	73	| 075 | 100 |	112	147	≈ 1.02	≈ 0.25
2400.07AG5	77	93	| 075 | 100 | 125 | 150 |	112	147	≈ 1.12	≈ 0.25

Installation dimensions | Overview

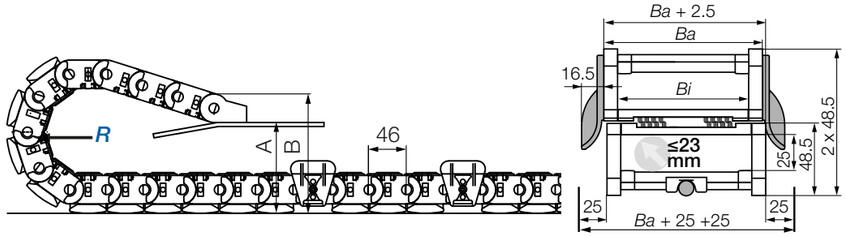

Inner height [mm]	**25**
Pitch [mm]	**46**
Links/m [pc.]	**22**
corresponds to [mm]	**1,012**
e-chain® length	$L_K = s/2 + K$

Accessories | 2400.AG5

Mounting brackets	Interior separation	Steel cable	Fixed end module	Fixed end bridge	Rope tensioning unit
					
Plastic mounting brackets with strain relief options.	Special autoglide 5 separator AG.25.2.	PVC-jacketed steel rope ø 10mm.	Fixed-end module for secure assembly.	For centre fixed and double-opposing.	Rope tensioning unit with indicator for exact tensioning.

Note: This type of system should be designed in conjunction with our engineering team.
All information on this page is for guidance only.
Please contact us at ▶ **www.igus.eu/contact**

autoglide 5 | Series 2600AG5

Product range



Part No. Available widths	*Bi* [mm]	*Ba* [mm]	Available bend radii *R* [mm]	Dimensions A [mm]	Dimensions B [mm]	Weight e-chain® [kg/m]	Weight steel rope [kg/m]
Series 2600, inner height 35mm							
2600.07AG5	75	91	| 075 | 100 |	178	228	≈ 1.42	≈ 0.25
2600.10AG5	100	116	| 075 | 100 | 125 | 150 |	178	228	≈ 1.49	≈ 0.25

Installation dimensions | Overview

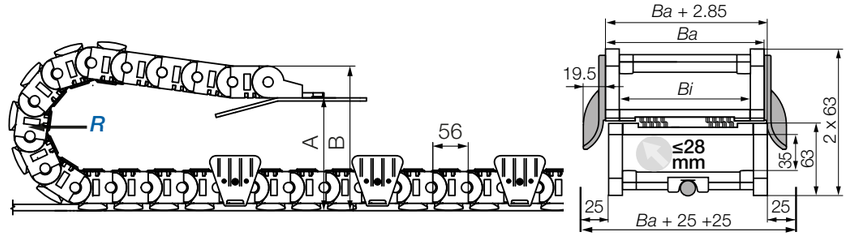

Inner height [mm]	**35**
Pitch [mm]	**56**
Links/m [pc.]	**18**
corresponds to [mm]	**1,008**
e-chain® length	$L_K = s/2 + K$

Accessories | 2600.AG5

Mounting brackets	Interior separation	Steel cable	Fixed end module	Fixed end bridge	Rope tensioning unit
			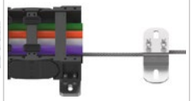		
Plastic mounting brackets with strain relief options.	Standard interior separation for 2600 series.	PVC-jacketed steel rope ø 10mm.	Fixed-end module for secure assembly.	For centre fixed and double-opposing.	Rope tensioning unit with indicator for exact tensioning.

Note: This type of system should be designed in conjunction with our engineering team.
All information on this page is for guidance only.
Please contact us at ▶ **www.igus.eu/contact**

autoglide 5 | Series E4.32.AG5

Product range



Part No. Available widths	*Bi* [mm]	*Ba* [mm]	Available bend radii *R* [mm]	Dimensions A [mm]	Dimensions B [mm]	Weight e-chain® [kg/m]	Weight steel rope [kg/m]
Series E4.32, inner height 32mm							
E4.32.112.R.0.AG5.NC	112	136	| 100 | 125 |	233	179	≈ 2.63	≈ 0.25
E4.32.12.R.0.AG5.NC	125	148	| 100 | 125 | 150 |	233	179	≈ 2.70	≈ 0.25
E4.32.15.R.0.AG5.NC	150	173	| 100 | 125 | 150 | 175 |	233	179	≈ 2.83	≈ 0.25
E4.32.17.R.0.AG5.NC	167	191	| 100 | 125 | 150 | 175 |	233	179	≈ 2.96	≈ 0.25
E4.32.20.R.0.AG5.NC	200	223	| 100 | 125 | 150 | 175 | 200 |	233	179	≈ 3.18	≈ 0.25
E4.32.262.R.0.AG5.NC	262	286	| 100 | 125 | 150 | 175 | 200 |	233	179	≈ 3.59	≈ 0.25

Installation dimensions | Overview

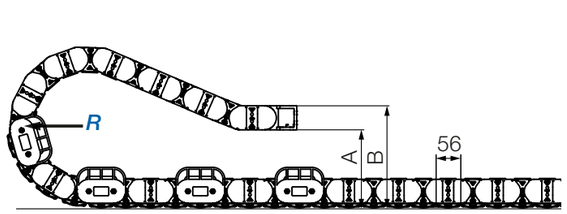

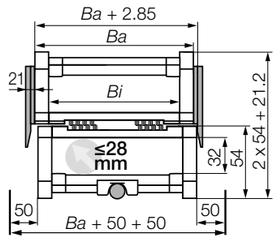

Inner height [mm]	**32**
Pitch [mm]	**56**
Links/m [pc.]	**18**
corresponds to [mm]	**1,008**
e-chain® length	$L_K = s/2 + K$

Accessories | E4.32.AG5

Mounting brackets	Interior separation	Steel cable	Fixed end module	Fixed end bridge	Rope tensioning unit
					
KMA mounting brackets with attachment from any side and C-profile option.	Standard interior separation for E4.32 series.	PVC-jacketed steel rope ø 10mm.	Fixed-end module for secure assembly.	For centre fixed and double-opposing.	Rope tensioning unit with indicator for exact tensioning.

Note: This type of system should be designed in conjunction with our engineering team.
All information on this page is for guidance only.
Please contact us at ▶ **www.igus.eu/contact**

autoglide 5 | Series E4.42.AG5

Product range



Part No. Available widths	*Bi* [mm]	*Ba* [mm]	Available bend radii *R* [mm]	Dimensions A [mm]	Dimensions B [mm]	Weight e-chain® [kg/m]	Weight steel rope [kg/m]
Series E4.42, inner height 42mm							
E4.42.112.R.0.AG5.NC	112	139	| 125 |	261	197	≈ 3.45	≈ 0.25
E4.42.12.R.0.AG5.NC	125	151	| 125 | 150 |	261	197	≈ 3.53	≈ 0.25
E4.42.15.R.0.AG5.NC	150	176	| 125 | 150 | 160 |	261	197	≈ 3.66	≈ 0.25
E4.42.17.R.0.AG5.NC	167	194	| 125 | 150 | 160 |	261	197	≈ 3.79	≈ 0.25
E4.42.20.R.0.AG5.NC	200	226	| 125 | 150 | 160 | 175 | 200 |	261	197	≈ 4.01	≈ 0.25
E4.42.262.R.0.AG5.NC	262	289	| 125 | 150 | 160 | 175 | 200 |	261	197	≈ 4.42	≈ 0.25

Installation dimensions | Overview

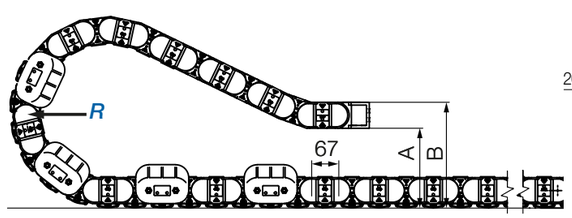

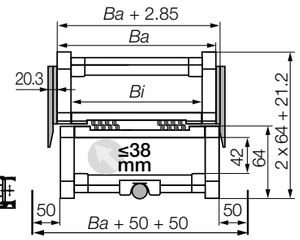

Inner height [mm]	**42**
Pitch [mm]	**67**
Links/m [pc.]	**15**
corresponds to [mm]	**1,005**
e-chain® length	$L_K = s/2 + K$

Accessories | E4.42.AG5

Mounting brackets	Interior separation	Steel cable	Fixed end module	Fixed end bridge	Rope tensioning unit
					
KMA mounting brackets with attachment from any side and C-profile option.	Standard interior separation for E4.42 series.	PVC-jacketed steel rope ø 10mm.	Fixed-end module for secure assembly.	For centre fixed and double-opposing.	Rope tensioning unit with indicator for exact tensioning.

Note: This type of system should be designed in conjunction with our engineering team.
All information on this page is for guidance only.
Please contact us at ▶ **www.igus.eu/contact**

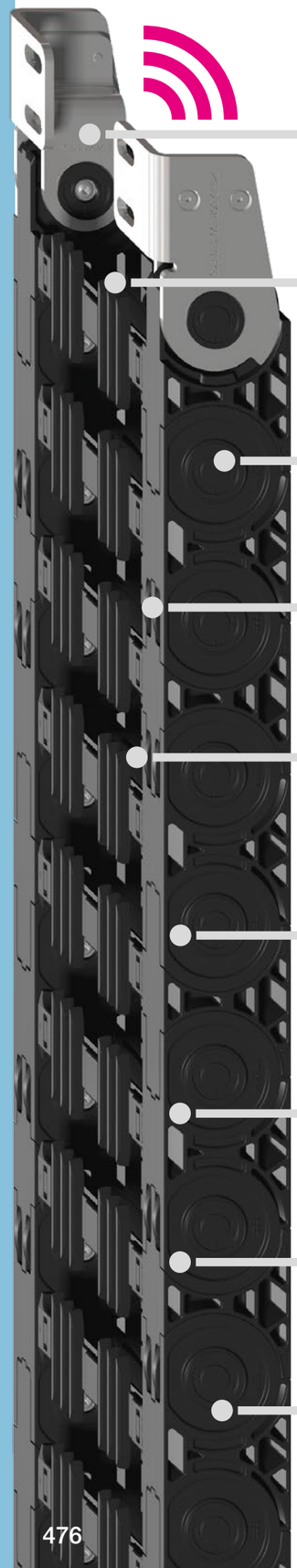

For maximum service life with optimised design - P4HD

The heavy-duty rol e-chain® P4HD meets all the requirements for the newest generation of container cranes. Longer travels, greater dynamics, zero failures: this is what the manufacturers and operators of ship-to-shore container cranes demand for energy chains on cranes. P4HD.56R fulfils these requirements - and offers maximum economic efficiency.

Benefits

- Developed for the next generations of STS cranes
- Service life extended again by 50% (compared to P41.56R)
- Everything redesigned: rolling elements, side bands, joining links
- Integration of predictive maintenance sensors possible (i.Sense)
- Low maintenance
- Retrofitting easy - guide troughs remain identical
- 57% drive power, saving energy

Typical application areas

- Crane technology
- Automated storage and retrieval systems
- Plant construction
- Linear robots
- Material handling

Selection table

Part No.	Inner height *hi* [mm]	Outer height *ha* [mm]	Inner width *Bi* [mm]	Outer width *Ba* [mm]	Bend radius *R* [mm]	Page
P4HD - heavy-duty rol e-chain®						
P4HD.56R	56	84	187 - 300	269.5 - 382.5	250	**478**

Technical data

General properties	
Speed rolling	≤ 10m/s
Acceleration rolling	≤ 50m/s²
igumid® G LW material - permitted temperature °C	-40°C/+120°C
Flammability class, igumid® G	VDE 0304 IIC UL94-HB

Note: This type of system should be designed in conjunction with our engineering team.
All information on this page is for guidance only.
Please contact us at ► **www.igus.eu/contact**

rol e-chain® solutions for long travels at high speeds

P4.1 - for longer service life

- 375,000km running performance - due to maintenance-free tribo-polymer plain bearings in conjunction with the chain links
- Long travel lengths: more than 1,000m
- Speeds higher than 5m/s
- Low vibration and noise due to a split profile roller

P4 - small profile rol e-chain® for high fill weights

- Identical pitch of the e-chain® link with or without roller
- The upper run rollers pass through the lower run rollers enables quiet operation
- Captive roller integrated into the side link
- Long travels (up to 800m), high fill weights (up to 30kg/m)



E4.1R - reduced noise, vibration and drive energy

- Easy changeover from gliding to rolling e-chain®
- rol e-chain® links suitable for all radii of the standard series
- Ideal for long travels
- Quiet operation due to equal pitch of the e-chain® links

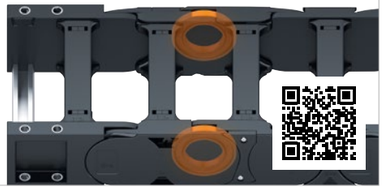

Product range



Part No. with crossbars every link, crossbars removable	Inner width *Bi* [mm]	Outer width *Ba* [mm]	Weight [kg/m]
P4HD.56R.18.□□.0	187	269.5	≈ 8.61
P4HD.56R.20.□□.0	200	282.5	≈ 8.69
P4HD.56R.23.□□.0	237	319.5	≈ 8.61
P4HD.56R.25.□□.0	250	332.5	≈ 9.13
P4HD.56R.28.□□.0*	287	369.5	≈ 9.16
P4HD.56R.30.□□.0	300	382.5	≈ 9.50
P4HD.56R.33.□□.0*	337	419.5	≈ 9.53
P4HD.56R.35.□□.0*	350	432.5	≈ 9.88
P4HD.56R.38.□□.0*	387	469.5	≈ 9.83
P4HD.56R.40.□□.0*	400	482.5	≈ 10.21
Available bend radii *R* [mm] | **250** | 300[1] | 350[1] |			

*Width available upon request, please consult igus® for delivery time.

1) Radius available upon request, please consult igus® for delivery time.

Installation dimensions | Overview

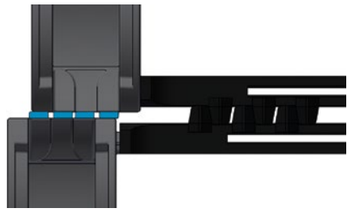

Due to the offset between upper run and lower run, the rollers run past each other

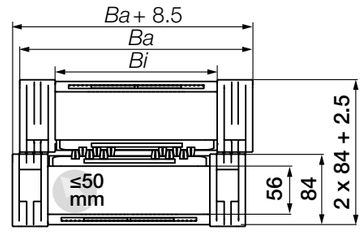

Inner height [mm]	56
Pitch [mm]	100
Links/m [pc.]	10
corresponds to [mm]	1,000
e-chain® length	$L_K = {}^{S}/_{2} + K$

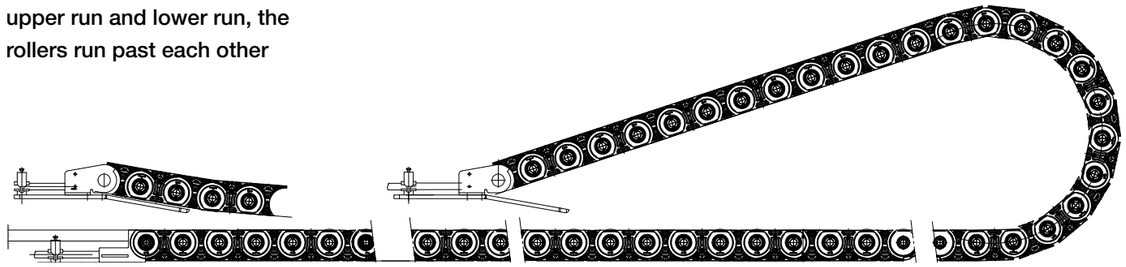

Note: This type of system should be designed in conjunction with our engineering team.
All information on this page is for guidance only.
Please contact us at ▶ **www.igus.eu/contact**



Huge range:
aluminium profile (standard: 2m section) available for almost all igus® e-chains®, seawater and corrosion-resistant

Wear-reducing: glide strips protect from wear on the sides

Fast connection:
interface connector, basic, made of plastic, easy to mount without tools

Energy supply is even more durable:
easy to assemble, low-abrasion glide bar for higher speeds, the new standard for series 973/974/975

Wear reduction:
proven extruded polymer glide bar

Easy installation:
bottom clamp basic, attached either inwards or outwards

Simple fastening:
C-profile, for bottom clamps

For heavy-duty applications:
heavy-duty bottom clamp, configurable online ▶ www.igus.eu/alu-guide

Simple connection:
optimised polymer fixed end module option, for fast and easy mounting, without any drilling

For general applications - aluminium SuperTrough, basic version, standard

- Simple and cost-effective basic design as well as version for complex engineering applications
- Very lightweight, modular assembly
- Corrosion-resistant, seawater-resistant aluminium profile
- Misalignment-free installation - no screwing or welding of the profiles required
- Conductivity according to DIN EN 61537 - standard

Selection table

Part No. without glide bars	Part No. with glide bars	Outer height H_{Ra} [mm]	Part No. installation set[2]	Side part material	Page Link
Basic version - with standard installation sets for general mechanical engineering					
970.30.SL	**970.31.SL**	77	960.30	Aluminium	**486**
970.30.SL	**970.32.SL**	77	960.30	Aluminium	**488**
971.30.SL	**971.31.SL**	87	960.30	Aluminium	**490**
972.02.30.SL	**972.02.31.SL**	117	960.30	Aluminium	**492**
972.30.SL	**972.31.SL**	117	960.30	Aluminium	**494**
972.30.SL	**972.32.SL**	117	960.30	Aluminium	**496**
973.30.SL	**973.31.SLH**[1]	144	960.40	Aluminium	**498**
974.30.SL	**974.31.SLH**[1]	184	960.50	Aluminium	**500**
975.30.SL	**975.31.SLH**[1]	236	960.50	Aluminium	**502**
Heavy-duty version - with HD installation sets, for tough plant construction					
971.30.SL	**971.31.SL**	87	971.50	Aluminium	▶ **www.igus.eu/alu-guide**
972.02.30.SL	**972.02.31.SL**	117	972.50	Aluminium	▶ **www.igus.eu/alu-guide**
972.30.SL	**972.31.SL**	117	972.50	Aluminium	▶ **www.igus.eu/alu-guide**
972.30.SL	**972.32.SL**	117	972.50	Aluminium	▶ **www.igus.eu/alu-guide**
973.30.SL	**973.31.SLH**[1]	144	973.50	Aluminium	▶ **www.igus.eu/alu-guide**
974.30.SL	**974.31.SLH**[1]	184	974.50	Aluminium	▶ **www.igus.eu/alu-guide**
975.30.SL	**975.31.SLH**[1]	236	975.50	Aluminium	▶ **www.igus.eu/alu-guide**

1) With abrasion-optimised high-speed glide bar

2) The basic Installation sets are the standard for the aluminium SuperTroughs. They can be fastened inside or outside and are recommended for most application areas. The basic clamping shoes are made of aluminium. The heavy-duty version is differentiated only by the type of the installation set. The part numbers of the channel side plates, glide strips, etc., are the same as the basic model. The heavy-duty installation set consists of a larger aluminium bracket, fastened outside on the guide trough.

Aluminium SuperTrough | Size overview

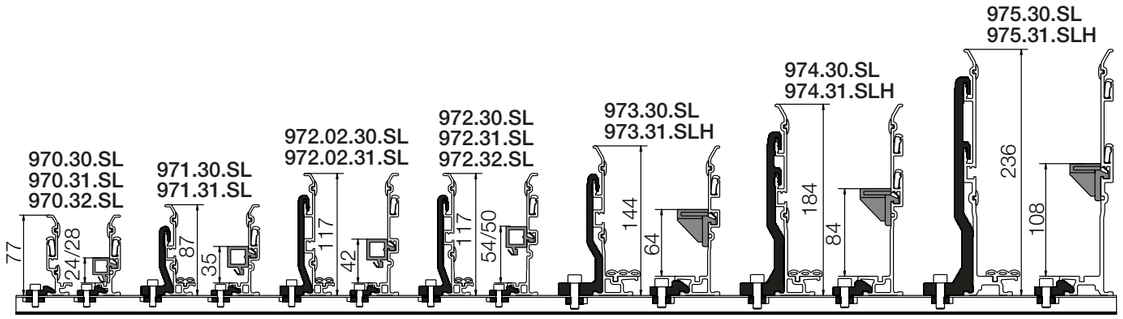

Aluminium SuperTrough | Basic version

Components, guide troughs and components, mounting kits

Components

❶ Trough side parts, aluminium, 2m
❷ Standard glide bars, 2m
High-speed glide bar, 0.5m
❸ Glide strips, plastic, 2m
(without glide strips upon request)
❹ Optional: noise dampening strip

Components, installation set

Ⓐ Bottom clamp, aluminium
Ⓑ C-profile, steel or stainless steel
Ⓒ Allen wrench
Ⓓ Sliding nut
Ⓔ Scalable crossbar, plastic

Ba = Outer e-chain® width
Bi = Inner e-chain® width
ha = e-chain® outer height
H_{Ri} = Trough inner height
H_{Ra} = Trough outer height
B_{Ri} = Trough inner width
B_{Ra} = Trough outer width

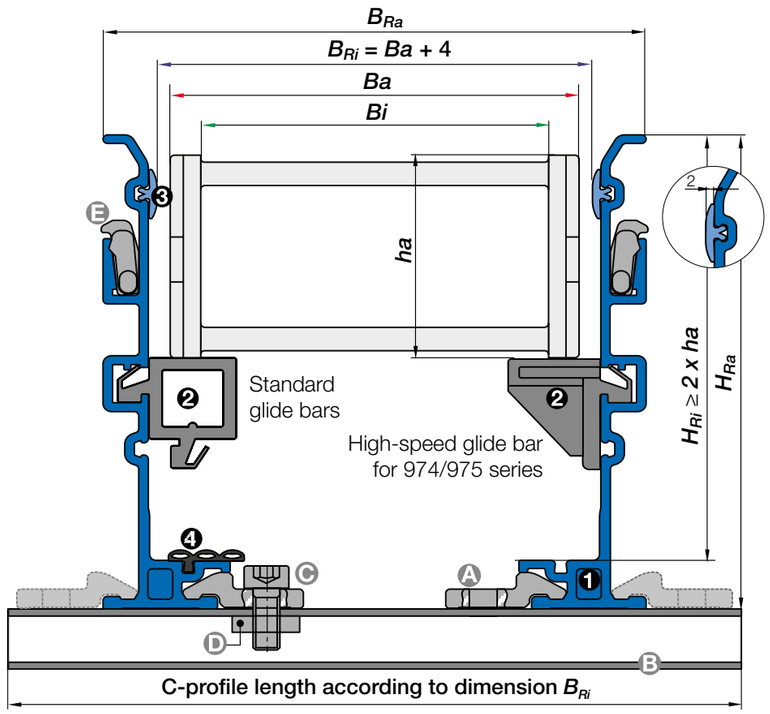

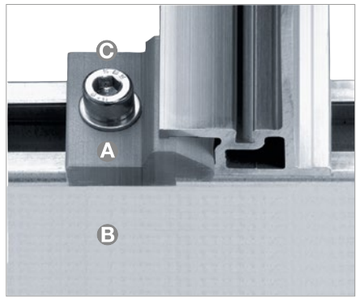

Simple fastening with basic bottom clamp and C-profile.

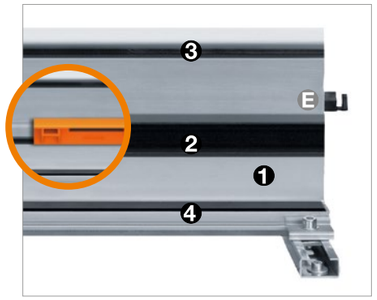

Wear-reducing due to glide bars and glide strips.

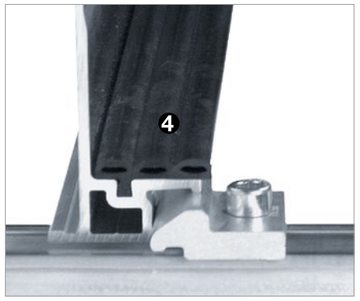

Optional noise dampening strip for additional noise reduction.

Aluminium SuperTrough | Configuration

Configured according to your requirements

Quickly and easily assemble the right aluminium SuperTrough for your application

- Selection of the suitable guide trough according to the e-chain® series and e-chain® width ***Bi***
- Determine the feed-in point of the cables
- Determine travel distance and thus the length of the required guide trough and the number of trough sections. (standard length of a trough side part: 2,000mm). For centre infeed, the length of the guide trough is calculated from half the travel length with and half the travel length without the glide bar
- Option: "Sound dampening" with noise dampening strip
- Number and type of the installation set - there are two installation set options: basic, standard and heavy-duty
- The installation set matches the igus® C-profile option
- If you have opted for an e-chain® with KMA mounting brackets, we offer a fixed end module for the quick and simple fastening of the e-chain® in the trough without drilling

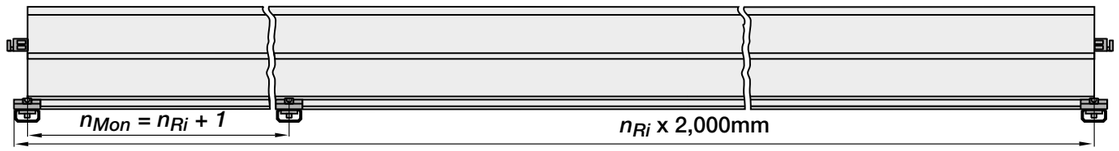

The quantity of the installation set is calculated from the number of the trough sections + 1 set.
Installation guide PDF with detailed assembly information ▶ www.igus.eu/installation-guide-pdf.

Order example | Examples based on Part No. 973.30.SL | 973.31.SL

Order example: length of travel 30m -centre fixed for series 3500.100.200.0 with B_{Ri} = 124	
1 set of 2 trough side parts, incl. glide strips, **without** glide bars **Order text: 16m guide trough without glide bars (8 sets of 2 off 2m sections)**	**973.30.SL**
1 set of 2 trough side parts, incl. glide strips, **with** glide bars **Order text: 16m guide trough with glide bars (8 sets of 2 off 2m sections)**	**973.31.SLH**
Installation set basic complete **(quantity: guide trough sets + 1)** **Order text: 17 installation sets, basic**	**960.40.175**
Option: For additional noise dampening strip **Please add index A**	**973.30.SLA**
Option: Fixed end module for a quick and easy mounting **Order text: 1 set**	**973.80.5**
Option: Trough clip for fixed cable installation on the outside of the trough **Order text: 30 pieces**	**SLC.40.17**

Calculation - travel centre fixed: half travel length, rounded to full 2m sections = X m.
Guide trough length without glide bars + X m guide trough length with glide bars + installation set, basic (number of trough sets + 1)

Fixed end module

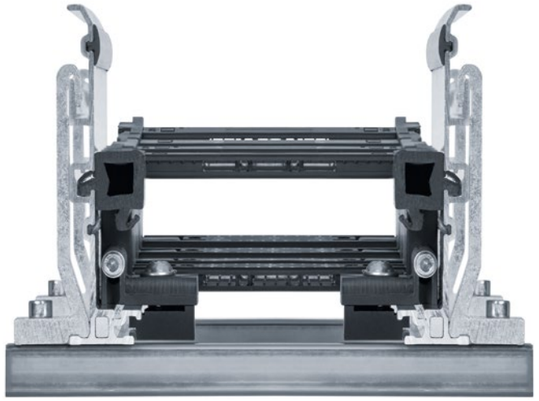

Optimised fixed end module - lightweight, low-cost, for connection of the e-chain® in aluminium SuperTrough

- Quick and simple fastening onto the aluminium SuperTrough
- Mounting bracket attachment on the aluminium SuperTrough without drilling
- Fixed end module is clamped to the trough
- Save installation time
- Minimise errors from drilling your own holes
- Stainless and cost-effective

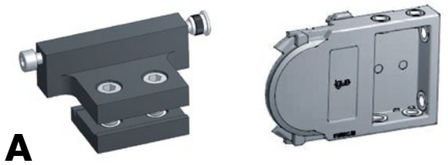

A Installation - Fixed end module

B Installation KMA mounting bracket

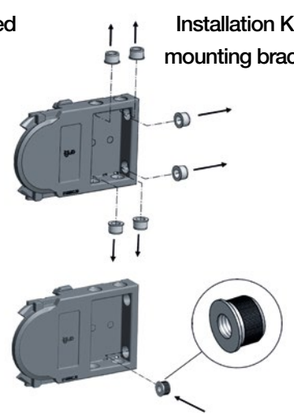

❶ Remove the pre-assembled metal bushings

❷ Insert the threaded bushings

❸ Installing the fixed end module

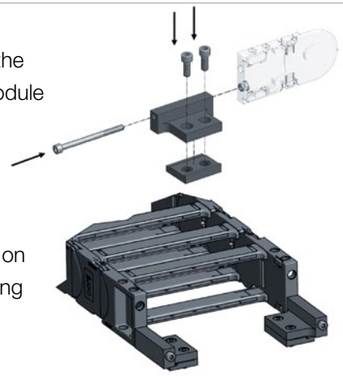

❹ Mounting on KMA mounting bracket

❺ Mounting on the aluminium SuperTrough

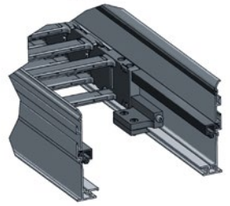

Fixed end clamp

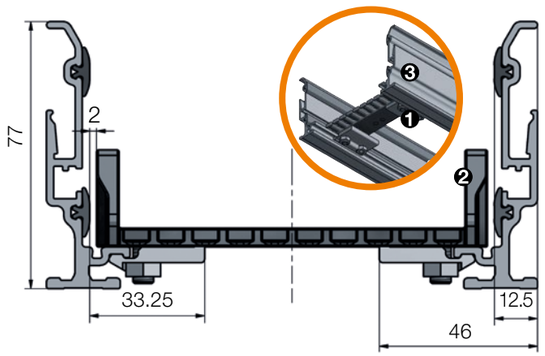

Fixed end clamp to attach the e-chain® into the smallest aluminium SuperTrough 970.30.SL

- For mounting brackets from series: 10, 015/ R15, B15, E2.17/E2C.17, E2.21/E2C.21, 1500
- Quick and simple attachment by clamping onto the aluminium SuperTrough without drilling
- The mounting point of the e-chain® can be changed quickly

❶ Fixed end clamp 970.80
❷ Mounting bracket
❸ Aluminium SuperTrough 970.30.SL

Aluminium SuperTrough | Basic version

Fixed end module | Fixed end clamp | Product range

Part No.	For aluminium SuperTroughs	For e-chains® series	From ≥ *Bi* [mm]	Mounting bracket
970.80[1]	970.30.SL / 970.31.SL	15/R15[3], E2.17/E2C.17, 10, B15	050	one-piece
970.80[1]	970.30.SL / 970.32.SL	E2.21/E2C.21[3], 1500[3]	050	one-piece
971.80.4	971.30.SL / 971.31.SL	E2.26/E2C.26, 2500, 255, E6.29	07	KMA
971.80.4	972.02.30.SL / 972.02.31.SL	E4.31L/R4.31	06	KMA
972.80.4	972.02.30.SL / 972.02.31.SL	E4.28/R4.28, E6.35	06	KMA
972.80.4	972.30.SL / 972.31.SL	E4Q.34/H4Q.34, E4.32/H4.32/R4.32, E4.38L/R4.38L, E6.40/R6.40	06	KMA
972.80.4	972.30.SL / 972.32.SL	E2.38/E2C.38, 2700, R58	06	KMA
973.81.5	973.30.SL / 973.31.SLH	E4Q.44/H4Q.44 E4.42/H4.42/R4.42, E4.48L/R4.48L, E6.52/R6.52	10	KMA
973.80.5	973.30.SL / 973.31.SLH	E2.48 , 3500, R68	100	KMA
974.81.5	974.30.SL / 974.31.SLH	E4.64L, 14040/14140/R18840, 14240/14340	10	KMA
974.80.5	974.30.SL / 974.31.SLH	E4Q.58/H4Q.58, E4.56/H4.56/R4.56, E6.62	10	KMA
975.80[2]	975.30.SL / 975.31.SLH	E4Q.82/H4Q.82, E4.80/H4.80/R4.80, E6.80	10	KMA
975.81[2]	975.30.SL / 975.31.SLH	15050/15150/R19850, 15250/15350	10	KMA

1) Material: polymer 2) Material: Aluminium AlMg3, seawater resistant 3) Fixed end clamp
Material screw kits: Standard steel, galvanised.
Optional: 316 stainless steel, material 1.4571 (AISI 316Ti). Standard: galvanised steel



Fixed end module - simple fastening of the e-chain® without drilling.

High-speed glide bar - Part No. GB.31.500

- Easy to assemble and low-abrasion for higher speeds
- 5x the abrasion resistance thanks to tribologically optimised material - compared to standard glide bars
- For particularly fast, gliding applications
- For aluminium SuperTrough Part No. 973.31.SLH, 974.31.SLH, 975.31.SLH



Trough clip - Part No. SLC.40.17

- The trough clip is a cable guide for the static cable run on the outside of an aluminium SuperTrough.
- For centre fixed e-chains®, the cables can simply be guided to the fixed end outside the trough
- Suitable for all aluminium SuperTroughs except 970.30 / .31 / .32

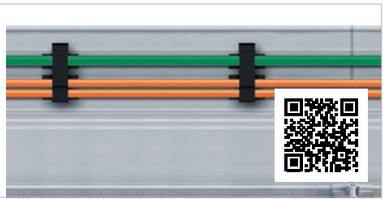

Aluminium SuperTrough | 970.30.SL / 970.31.SL

Product range | Trough height: 77mm

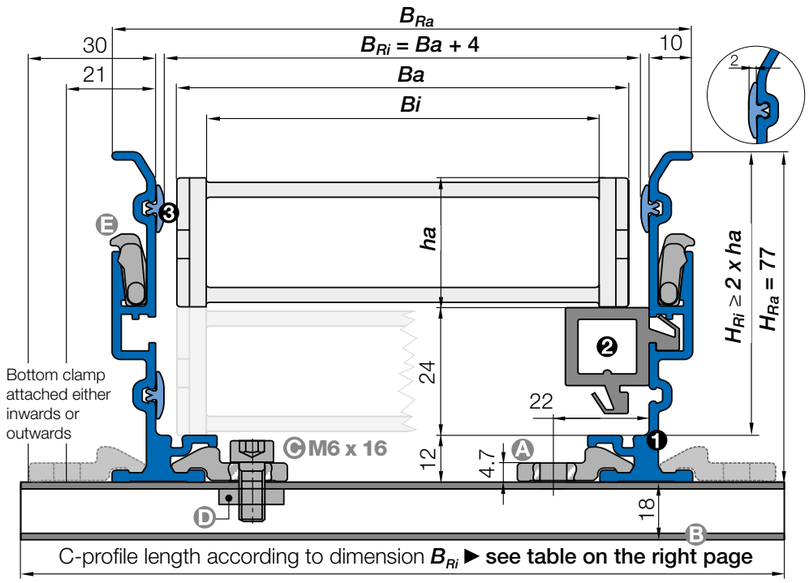

For the following series
E2.1 micro
● E2.17/E2C.17
E2 mini
● 10
● B15
zipper
● 15
● R15

Note: The inner width of the guide through and the C-profile length of the installation set can differ according to the bracket you choose. Please call us.

Full sets

Full trough side part sets ❶ | ❷ | ❸ | ❹ (2m pieces each)	Part No.	Weight
1 set with 2 trough side parts, incl. glide strips, without glide bars	970.30.SL	≈ 4.20kg
1 set with 2 trough side parts including Glide strips, with glide bars	970.31.SL[2)]	≈ 4.90kg

2) 1 set of 2 trough side parts, incl. glide strips, with high-speed glide bars, upon request.

Full installation set Ⓐ | Ⓑ | Ⓒ | Ⓓ | Ⓔ	Part No.	Weight
1 installation set without C-profile	960.30	≈ 0.06kg
1 installation set with C-profile (C-profile length according to dimension B_{Ri})	960.30.XXX[3)]	upon request

3) Please add the C-profile length XXX as shown on the tables. Example: **Part No. 960.30.125**

Individual parts

Components as individual parts, trough	Part No.	Weight
❶ 1 trough side part, 2m section	70.11	≈ 2.04kg
❷ 1 glide bar, 2m section	81.79[4)]	≈ 0.42kg
❸ 1 glide strip, plastic, 2m section	75.01	≈ 0.06kg

4) High-speed glide bars, upon request.

Components as individual parts, installation set	Part No.	Weight
Ⓐ 1 bottom clamp, aluminium individual	75.40	≈ 0.03kg
Ⓑ 1 C-profile, individual (C-profile length according to dimension B_{Ri})	92.52.XXX.E[5)]	≈ 0.90kg/m
Ⓒ 1 screw M6 x 16, individual	MAT 0040209 / M6 x 16	
Ⓓ 1 glide nut, individual	MAT 0040057 / M6	
Ⓔ 1 interface connector, individual	75.60	

5) Please add the C-profile length XXX as shown on the tables. Example: **Part No. 92.52.125.E**. For stainless steel, please add index**.E**.

Option

Additional options for simple fastening without drilling	Part No.
1 fixed end module set - to attach the e-chain® into the aluminium SuperTrough	970.80

C-profile lengths (according to Dim. B_{Ri}) | Basic version

E2.17/E2C.17			
Width index	B_{Ri} [mm]	Part No. attached inwards	Part No. attached outwards
.015	30	upon request	960.30.125
.025	40	upon request	960.30.150
.038	53	upon request	960.30.150
.050	65	960.30.125	960.30.175
.063	78	960.30.125	960.30.175
.080	95	960.30.150	960.30.200
.100	115	960.30.175	960.30.225

10			
Width index	B_{Ri} [mm]	Part No. attached inwards	Part No. attached outwards
.015	30	upon request	960.30.125
.025	40	upon request	960.30.150
.038	53	upon request	960.30.150
.050	65	960.30.125	960.30.175
.5	80	960.30.125	960.30.175
.6	98	960.30.150	960.30.200
.7	117	960.30.175	960.30.225

B15			
Width index	B_{Ri} [mm]	Part No. attached inwards	Part No. attached outwards
.015	30	upon request	960.30.125
.025	40	upon request	960.30.150
.038	53	upon request	960.30.150
.050	65	960.30.125	960.30.175
.5	80	960.30.125	960.30.175
.6	98	960.30.150	960.30.200
.7	117	960.30.175	960.30.225

15			
Width index	B_{Ri} [mm]	Part No. attached inwards	Part No. attached outwards
.015	30	upon request	960.30.125
.025	40	upon request	960.30.150
.038	53	upon request	960.30.150
.050	65	960.30.125	960.30.175
.5	80	960.30.125	960.30.175
.6	98	960.30.150	960.30.200
.7	117	960.30.175	960.30.225

R15			
Width index	B_{Ri} [mm]	Part No. attached inwards	Part No. attached outwards
.025	40	upon request	960.30.150
.038	53	upon request	960.30.150
.063	80	960.30.125	960.30.175
.080	98	960.30.150	960.30.200

Aluminium SuperTrough | 970.30.SL / 970.32.SL

Product range | Trough height: 77mm

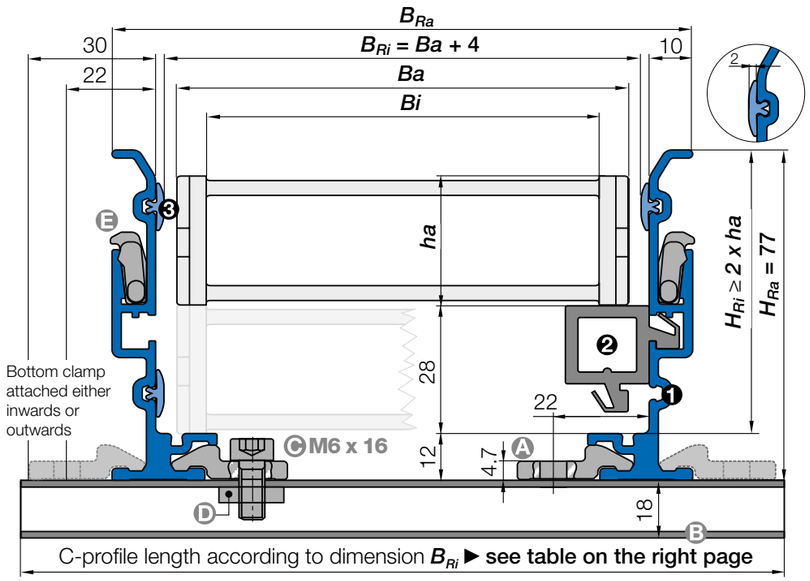

For the following series
E2.1
● E2.21/E2C.21
E2/000
● 1500
E4.1
● E4.21

Note: The inner width of the guide through and the C-profile length of the installation set can differ according to the bracket you choose. Please call us.

Full sets

Full trough side part sets ❶ | ❷ | ❸ | ❹ (2m pieces each)	Part No.	Weight
1 set with 2 trough side parts, incl. glide strips, without glide bars	**970.30.SL**	≈ 4.20kg
1 set with 2 trough side parts including Glide strips, with glide bars	**970.32.SL**[2)]	≈ 5.00kg

2) 1 set of 2 trough side parts, incl. glide strips, with high-speed glide bars, upon request.

Full installation set Ⓐ | Ⓑ | Ⓒ | Ⓓ | Ⓔ	Part No.	Weight
1 installation set without C-profile	**960.30**	≈ 0.06kg
1 installation set with C-profile (C-profile length according to dimension B_{Ri})	**960.30.**XXX[3)]	upon request

3) Please add the C-profile length XXX as shown on the tables. Example: **Part No. 960.30.125**

Individual parts

Components as individual parts, trough	Part No.	Weight
❶ 1 trough side part, 2m section	**70.11**	≈ 2.04kg
❷ 1 glide bar, 2m section	**81.79**[4)]	≈ 0.42kg
❸ 1 glide strip, plastic, 2m section	**75.01**	≈ 0.06kg

4) High-speed glide bars, upon request.

Components as individual parts, installation set	Part No.	Weight
Ⓐ 1 bottom clamp, aluminium individual	**75.40**	≈ 0.03kg
Ⓑ 1 C-profile, individual (C-profile length according to dimension B_{Ri})	**92.52.**XXX**.E**[5)]	≈ 0.90kg/m
Ⓒ 1 screw M6 x 16, individual	**MAT 0040209 / M6 x 16**	
Ⓓ 1 glide nut, individual	**MAT 0040057 / M6**	
Ⓔ 1 interface connector, individual	**75.60**	

5) Please add the C-profile length XXX as shown on the tables. Example: **Part No. 92.52.125.E**. For stainless steel, please add index**.E**.

Option

Additional options for simple fastening without drilling	Part No.
1 fixed end module set - to attach the e-chain® into the aluminium SuperTrough	**970.80**

C-profile lengths (according to Dim. B_{Ri}) | Basic version

E2.21/E2C.21			
Width index	B_{Ri} [mm]	Part No. attached inwards	Part No. attached outwards
.015	**33**	upon request	960.30.125
.020	**38**	upon request	960.30.125
.025	**43**	upon request	960.30.150
.038	**56**	upon request	960.30.150
.050	**68**	960.30.125	960.30.175
.068	**86**	960.30.150	960.30.175
.080	**98**	960.30.150	960.30.200
.100	**118**	960.30.175	960.30.225
.125	**143**	960.30.200	960.30.250

1500			
Width index	B_{Ri} [mm]	Part No. attached inwards	Part No. attached outwards
.015	**33**	upon request	960.30.125
.020	**38**	upon request	960.30.125
.025	**43**	upon request	960.30.150
.038	**56**	upon request	960.30.150
.050	**68**	960.30.125	960.30.175
.068	**86**	960.30.150	960.30.175
.080	**98**	960.30.150	960.30.200
.100	**118**	960.30.175	960.30.225
.125	**143**	960.30.200	960.30.250

E4.21			
Width index	B_{Ri} [mm]	Part No. attached inwards	Part No. attached outwards
.030	**48**	upon request	960.30.150
.040	**58**	960.30.125	960.30.150
.050	**68**	960.30.125	960.30.175
.060	**78**	960.30.125	960.30.175
.070	**88**	960.30.150	960.30.175
.080	**98**	960.30.150	960.30.200
.090	**108**	960.30.175	960.30.200
.100	**118**	960.30.175	960.30.225
.110	**128**	960.30.175	960.30.225
.120	**138**	960.30.200	960.30.225
.140	**158**	960.30.225	960.30.250

Aluminium SuperTrough | 971.30.SL / 971.31.SL

Product range | Trough height: 87mm

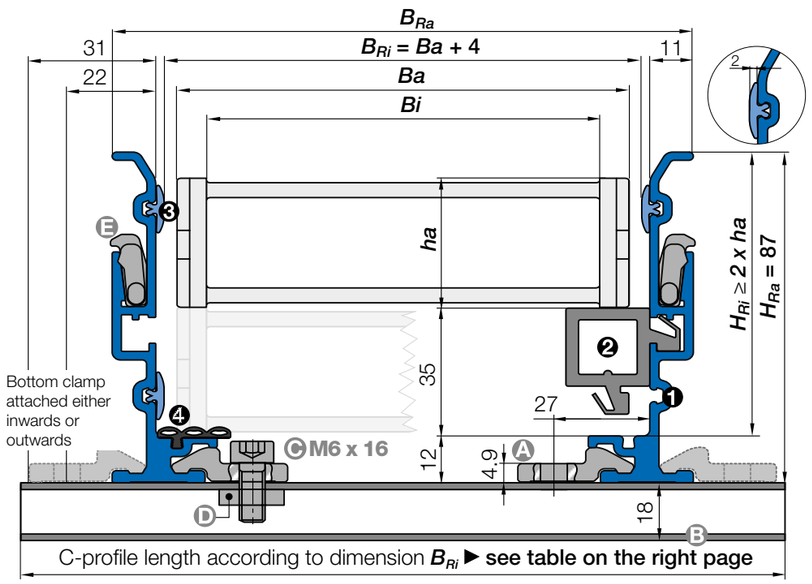

C-profile length according to dimension B_{Ri} ▶ see table on the right page

For the following series
E2.1
● E2.26
E2/000
● 2500
● 255
E2 R
● R48
E6
● E6.29/R6.29

Note: The inner width of the guide through and the C-profile length of the installation set can differ according to the bracket you choose. Please call us.

Full sets

Full trough side part sets ❶ | ❷ | ❸ | ❹ (2m pieces each)	Part No.	Weight
1 set with 2 trough side parts, incl. glide strips, without glide bars	**971.30.SLA**[1)]	≈ 5.00kg
1 set with 2 trough side parts including Glide strips, with glide bars	**971.31.SL**[2)]	≈ 6.40kg

1) For additional noise dampening strip, please add index **A** to the Part No. Example: **Part No. 971.30.SLA**

2) 1 set of 2 trough side parts, incl. glide strips, with high-speed glide bars, upon request.

Full installation set Ⓐ | Ⓑ | Ⓒ | Ⓓ | Ⓔ	Part No.	Weight
1 installation set without C-profile	**960.30**	≈ 0.06kg
1 installation set with C-profile (C-profile length according to dimension B_{Ri})	**960.30.**XXX[3)]	upon request

3) Please add the C-profile length XXX as shown on the tables. Example: **Part No. 960.30.150**

Individual parts

Components as individual parts, trough	Part No.	Weight
❶ 1 trough side part, 2m section	**71.11**	≈ 2.44kg
❷ 1 glide bar, 2m section	**82.79**[4)]	≈ 0.60kg
❸ 1 glide strip, plastic, 2m section	**75.01**	≈ 0.06kg
❹ 1 noise dampening strip, 2m section	**75.67.H.2000**	≈ 0.16kg

4) High-speed glide bars, upon request.

Components as individual parts, installation set	Part No.	Weight
Ⓐ 1 bottom clamp, aluminium individual	**75.40**	≈ 0.03kg
Ⓑ 1 C-profile, individual (C-profile length according to dimension B_{Ri})	**92.52.**XXX**.E**[5)]	≈ 0.90kg/m
Ⓒ 1 screw M6 x 16, individual	**MAT 0040209 / M6 x 16**	
Ⓓ 1 glide nut, individual	**MAT 0040057 / M6**	
Ⓔ 1 interface connector, individual	**75.60**	

5) Please add the C-profile length XXX as shown on the tables. Example: **Part No. 92.52.150.E**. For stainless steel, please add index**.E**.

Options

Additional options for simple fastening without drilling	Part No.
1 fixed end module set - to attach the e-chain® into the aluminium SuperTrough	**971.80.4**
Trough clip - for guiding cables on the outside of a aluminium SuperTrough	**SLC.40.17**

C-profile lengths (according to Dim. B_{Ri}) | Basic version

E2C.26			
Width index	B_{Ri} [mm]	Part No. attached inwards	Part No. attached outwards
.025	**46**	upon request	960.30.150
.038	**59**	upon request	960.30.150
.057	**78**	960.30.125	960.30.175
.077	**98**	960.30.150	960.30.200
.089	**110**	960.30.175	960.30.225
.103	**124**	960.30.175	960.30.225
.125	**146**	960.30.200	960.30.250

2500			
Width index	B_{Ri} [mm]	Part No. attached inwards	Part No. attached outwards
.02	**45**	upon request	960.30.150
.03	**58**	upon request	960.30.150
.05	**77**	960.30.125	960.30.175
.07	**97**	960.30.150	960.30.200
.09	**109**	960.30.175	960.30.225
.10	**123**	960.30.175	960.30.225
.12	**145**	960.30.200	960.30.250

255			
Width index	B_{Ri} [mm]	Part No. attached inwards	Part No. attached outwards
.03	**58**	upon request	960.30.150
.05	**77**	960.30.125	960.30.175
.07	**97**	960.30.150	960.30.200
.10	**123**	960.30.175	960.30.225

R48			
Width index	B_{Ri} [mm]	Part No. attached inwards	Part No. attached outwards
.025	**40**	upon request	960.30.150
.050	**65**	upon request	960.30.175
.075	**90**	960.30.150	960.30.200
.100	**115**	960.30.175	960.30.225
.130	**145**	960.30.200	960.30.250

E6.29/R6.29			
Width index	B_{Ri} [mm]	Part No. attached inwards	Part No. attached outwards
.030	**50**	upon request	960.30.150
.040	**60**	upon request	960.30.175
.050	**70**	upon request	960.30.175
.060	**80**	960.30.150	960.30.175
.070	**90**	960.30.150	960.30.200
.080	**100**	960.30.150	960.30.200
.090	**110**	960.30.175	960.30.225
.100	**120**	960.30.175	960.30.225
.110	**130**	960.30.200	960.30.225
.120	**140**	960.30.200	960.30.250
.140	**160**	960.30.225	960.30.250

Heavy-duty version for high load applications

- This aluminium SuperTrough is also available for plant manufacturing with special heavy-duty brackets for secure connection
- The installation sets are fastened outside on the guide trough
- Installation set Part No. **971.50.**



Aluminium SuperTrough | 972.02.30.SL / 972.02.31.SL

Product range | Trough height: 117mm

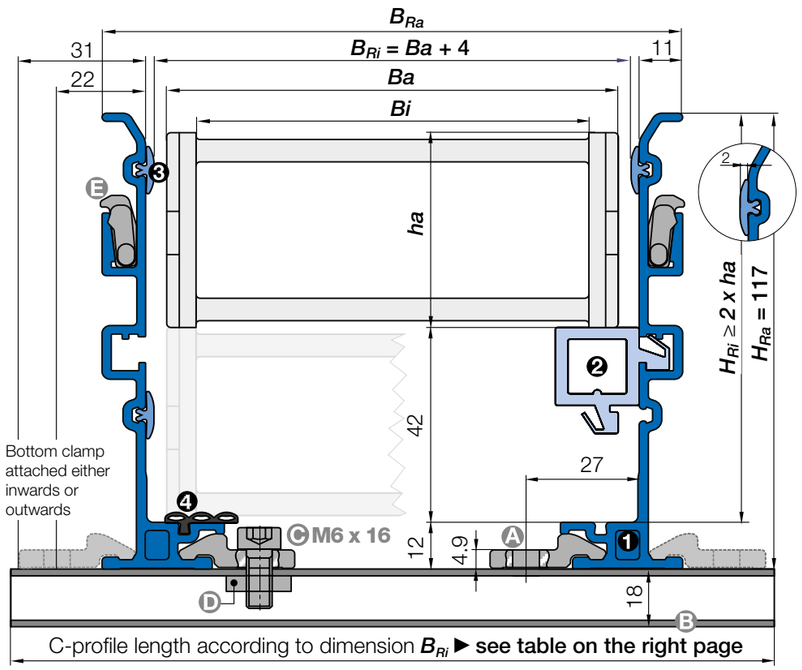

For the following series
E4.1
● E4.28/R4.28
E4.1L
● E4.31L/R4.31L
E6
● E6.35

Note: The inner width of the guide through and the C-profile length of the installation set can differ according to the bracket you choose. Please call us.

Full sets

Full trough side part sets ❶ | ❷ | ❸ | ❹ (2m pieces each)	Part No.	Weight
1 set with 2 trough side parts, incl. glide strips, without glide bars	**972.02.30.SLA**[1)]	≈ 6.00kg
1 set with 2 trough side parts including Glide strips, with glide bars	**972.02.31.SL**[2)]	≈ 7.40kg

1) For additional noise dampening strip, please add index **A** to the Part No. Example: **Part No. 972.02.30.SLA**

2) 1 set of 2 trough side parts, incl. glide strips, with high-speed glide bars, upon request.

Full installation set Ⓐ | Ⓑ | Ⓒ | Ⓓ | Ⓔ	Part No.	Weight
1 installation set without C-profile	**960.30**	≈ 0.06kg
1 installation set with C-profile (C-profile length according to dimension B_{Ri})	**960.30.**XXX[3)]	upon request

3) Please add the C-profile length XXX as shown on the tables. Example: **Part No. 960.30.175**

Individual parts

Components as individual parts, trough	Part No.	Weight
❶ 1 trough side part, 2m section	**72.11.02**	≈ 2.94kg
❷ 1 glide bar, 2m section	**82.79**[4)]	≈ 1.30kg
❸ 1 glide strip, plastic, 2m section	**75.01**	≈ 0.06kg
❹ 1 noise dampening strip, 2m section	**75.67.H.2000**	≈ 0.16kg

4) High-speed glide bars, upon request.

Components as individual parts, installation set	Part No.	Weight
Ⓐ 1 bottom clamp, aluminium individual	**75.40**	≈ 0.03kg
Ⓑ 1 C-profile, individual (C-profile length according to dimension B_{Ri})	**92.52.**XXX**.E**[5)]	≈ 0.90kg/m
Ⓒ 1 screw M6 x 16, individual	**MAT 0040209 / M6 x 16**	
Ⓓ 1 glide nut, individual	**MAT 0040057 / M6**	
Ⓔ 1 interface connector, individual	**75.60**	

5) Please add the C-profile length XXX as shown on the tables. Example: **Part No. 92.52.175.E**. For stainless steel, please add index**.E**.

Options

Additional options for simple fastening without drilling	Part No.
1 fixed end module set - to attach the e-chain® into the aluminium SuperTrough	**971.80.4**[A)]**/ 972.80.4**[B)]
Trough clip - for guiding cables on the outside of a aluminium SuperTrough	**SLC.40.17**

A) Fixed end module 971.80.4 for series E4.31L/R4.31L / B) Fixed end module 972.80.4 for series E4.28/R4.28 and E6.35

C-profile lengths (according to Dim. B_{Ri}) | Basic version

E4.28/R4.28			
Width index	B_{Ri} [mm]	Part No. attached inwards	Part No. attached outwards
.040	**64**	upon request	960.30.175
.050	**74**	960.30.125	960.30.175
.052	**76**	960.30.125	960.30.175
.062	**86**	960.30.150	960.30.200
.070	**94**	960.30.150	960.30.200
.075	**99**	960.30.150	960.30.200
.087	**111**	960.30.175	960.30.225
.100	**124**	960.30.175	960.30.225
.125	**149**	960.30.200	960.30.250
.150	**174**	960.30.225	960.30.275
.175	**199**	960.30.250	960.30.300
.200	**224**	960.30.275	960.30.325
.225	**249**	960.30.300	960.30.350
.250	**274**	960.30.325	960.30.375
.275	**299**	960.30.350	960.30.400
.300	**324**	960.30.375	960.30.425

E4.31L/R4.31L			
Width index	B_{Ri} [mm]	Part No. attached inwards	Part No. attached outwards
.040	**58**	upon request	960.30.150
.050	**68**	upon request	960.30.175
.062	**80**	960.30.150	960.30.175
.075	**93**	960.30.150	960.30.200
.087	**105**	960.30.175	960.30.200
.100	**118**	960.30.175	960.30.225
.112	**130**	960.30.200	960.30.225
.125	**143**	960.30.200	960.30.250
.137*	**155**	960.30.225	960.30.250
.150	**168**	960.30.225	960.30.275
.162	**180**	960.30.250	960.30.275
.175	**193**	960.30.250	960.30.300
.187*	**205**	960.30.275	960.30.300
.200*	**218**	960.30.275	960.30.325

* Available upon request.

E6.35			
Width index	B_{Ri} [mm]	Part No. attached inwards	Part No. attached outwards
.030	**54**	upon request	960.30.150
.040	**64**	upon request	960.30.175
.050	**74**	960.30. 125	960.30.175
.060	**84**	960.30. 150	960.30.200
.070	**94**	960.30.150	960.30.200
.080	**104**	960.30.150	960.30.200
.090	**114**	960.30.175	960.30.225
.100	**124**	960.30.175	960.30.225
.110	**134**	960.30.200	960.30.250
.120	**144**	960.30.200	960.30.250
.140	**164**	960.30.225	960.30.275

Heavy-duty version for high load applications

- This aluminium SuperTrough is also available for plant manufacturing with special heavy-duty brackets for secure connection
- The installation sets are fastened outside on the guide trough
- Installation set Part No. **972.50.**



Aluminium SuperTrough | 972.30.SL / 972.31.SL

Product range | Trough height: 117mm

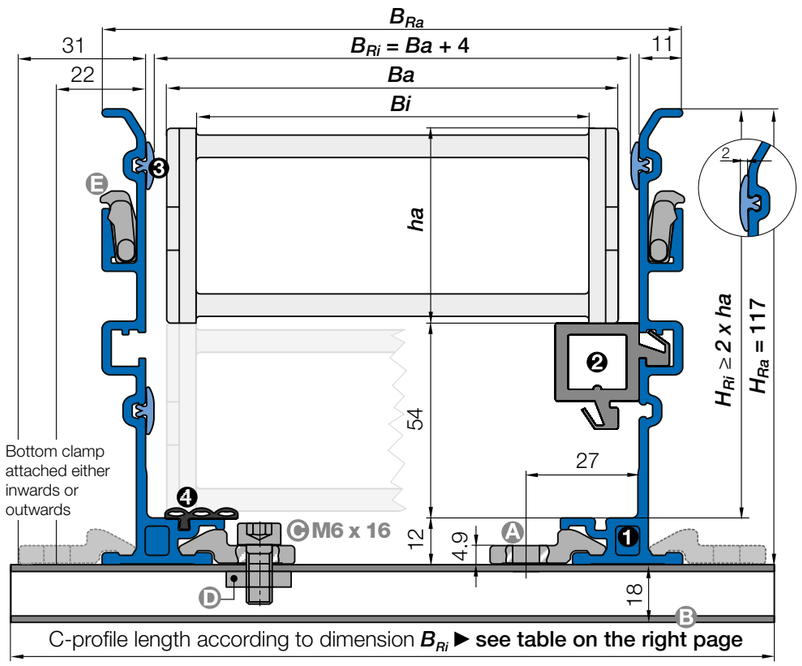

C-profile length according to dimension B_{Ri} ▶ see table on the right page

For the following series
E4Q
● E4Q.34/H4Q.34
E4.1
● E4.32/H4.32/R4.32
E4.1L
● E4.38L/R4.38L
E6
● E6.40/R6.40

Note: The inner width of the guide through and the C-profile length of the installation set can differ according to the bracket you choose. Please call us.

Full sets

Full trough side part sets ❶ | ❷ | ❸ | ❹ (2m pieces each)	Part No.	Weight
1 set with 2 trough side parts, incl. glide strips, without glide bars	**972.30.SLA**[1)]	≈ 6.00kg
1 set with 2 trough side parts including Glide strips, with glide bars	**972.31.SL**[2)]	≈ 7.40kg

1) For additional noise dampening strip, please add index **A** to the Part No. Example: **Part No. 972.30.SLA**

2) 1 set of 2 trough side parts, incl. glide strips, with high-speed glide bars, upon request.

Full installation set Ⓐ | Ⓑ | Ⓒ | Ⓓ | Ⓔ	Part No.	Weight
1 installation set without C-profile	**960.30**	≈ 0.06kg
1 installation set with C-profile (C-profile length according to dimension B_{Ri})	**960.30.**XXX[3)]	upon request

3) Please add the C-profile length XXX as shown on the tables. Example: **Part No. 960.30.150**

Individual parts

Components as individual parts, trough	Part No.	Weight
❶ 1 trough side part, 2m section	**72.11**	≈ 2.94kg
❷ 1 glide bar, 2m section	**82.79**[4)]	≈ 0.60kg
❸ 1 glide strip, plastic, 2m section	**75.01**	≈ 0.06kg
❹ 1 noise dampening strip, 2m section	**75.67.H.2000**	≈ 0.16kg

4) High-speed glide bars, upon request.

Components as individual parts, installation set	Part No.	Weight
Ⓐ 1 bottom clamp, aluminium individual	**75.40**	≈ 0.03kg
Ⓑ 1 C-profile, individual (C-profile length according to dimension B_{Ri})	**92.52.**XXX**.E**[5)]	≈ 0.90kg/m
Ⓒ 1 screw M6 x 16, individual	**MAT 0040209 / M6 x 16**	
Ⓓ 1 glide nut, individual	**MAT 0040057 / M6**	
Ⓔ 1 interface connector, individual	**75.60**	

5) Please add the C-profile length XXX as shown on the tables. Example: **Part No. 92.52.175.E**. For stainless steel, please add index**.E**.

Options

Additional options for simple fastening without drilling	Part No.
1 fixed end module set - to attach the e-chain® into the aluminium SuperTrough	**972.80.4**
Trough clip - for guiding cables on the outside of a aluminium SuperTrough	**SLC.40.17**

C-profile lengths (according to Dim. B_{Ri}) | Basic version

E4Q.34/H4Q.34

Width index	B_{Ri} [mm]	Part No. attached inwards	Part No. attached outwards
.075	**102**	960.30.150	960.30.200
.087	**114**	960.30.175	960.30.225
.100	**127**	960.30.175	960.30.225
.108	**135**	960.30.200	960.30.250
.112	**140**	960.30.200	960.30.250
.125	**152**	960.30.200	960.30.250
.137	**165**	960.30.225	960.30.275
.150	**177**	960.30.225	960.30.275
.162	**190**	960.30.250	960.30.300
.168	**195**	960.30.250	960.30.300
.175	**202**	960.30.250	960.30.300
.187	**215**	960.30.275	960.30.325
.200	**227**	960.30.275	960.30.325
.212	**240**	960.30.300	960.30.350
.225	**252**	960.30.300	960.30.350
.237	**265**	960.30.325	960.30.375
.250	**277**	960.30.325	960.30.375
.262	**290**	960.30.350	960.30.400
.275	**302**	960.30.350	960.30.400
.287	**315**	960.30.375	960.30.425
.300	**327**	960.30.375	960.30.425
.312*	**340**	960.30.400	960.30.450
.325*	**352**	960.30.400	960.30.450
.337*	**365**	960.30.425	960.30.475
.350	**377**	960.30.425	960.30.475
.362*	**390**	960.30.450	960.30.500
.375	**402**	960.30.450	960.30.500
.387	**415**	960.30.475	960.30.525
.400	**427**	960.30.475	960.30.525

* Available upon request.

E4.32/H4.32/R4.32

Width index	B_{Ri} [mm]	Part No. attached inwards	Part No. attached outwards
.05	**77**	960.30.125	960.30.175
.06	**95**	960.30.150	960.30.200
.07	**102**	960.30.150	960.30.200
.087	**114**	960.30.175	960.30.225
.097	**114**	960.30.175	960.30.225
.10	**127**	960.30.175	960.30.225
.11	**135**	960.30.200	960.30.250
.112	**140**	960.30.200	960.30.250
.12	**152**	960.30.200	960.30.250
.137	**165**	960.30.225	960.30.275
.15	**177**	960.30.225	960.30.275
.162	**190**	960.30.250	960.30.300
.17	**195**	960.30.250	960.30.300
.18	**202**	960.30.250	960.30.300
.187	**215**	960.30.275	960.30.325
.20	**227**	960.30.275	960.30.325
.212	**240**	960.30.300	960.30.350
.23	**252**	960.30.300	960.30.350
.237	**265**	960.30.325	960.30.375
.25	**277**	960.30.325	960.30.375
.262	**290**	960.30.350	960.30.400
.28	**302**	960.30.350	960.30.400
.29	**315**	960.30.375	960.30.425
.30	**327**	960.30.375	960.30.425
.312	**340**	960.30.400	960.30.450
.325	**352**	960.30.400	960.30.450
.337	**365**	960.30.425	960.30.475
.350	**377**	960.30.425	960.30.475
.362	**390**	960.30.450	960.30.500
.375	**402**	960.30.450	960.30.500
.387	**415**	960.30.475	960.30.525
.400	**427**	960.30.475	960.30.525

E4.38L/R4.38L

Width index	B_{Ri} [mm]	Part No. attached inwards	Part No. attached outwards
.050	**70**	upon request	960.30.200
.062	**82**	upon request	960.30.200
.075	**95**	upon request	960.30.225
.087	**107**	upon request	960.30.225
.100	**120**	960.30.175	960.30.250
.105	**125**	960.30.175	960.30.250
.112	**132**	960.30.200	960.30.250
.125	**145**	960.30.200	960.30.275
.137	**157**	960.30.225	960.30.275
.150	**170**	960.30.225	960.30.300
.162	**182**	960.30.250	960.30.300
.175	**195**	960.30.250	960.30.325
.187	**207**	960.30.275	960.30.325
.200	**220**	960.30.275	960.30.350
.212	**232**	960.30.300	960.30.350
.225	**245**	960.30.300	960.30.375
.237	**257**	960.30.325	960.30.375
.250	**270**	960.30.325	960.30.375
.262	**282**	960.30.325	960.30.375
.275*	**295**	960.30.350	960.30.400
.287*	**307**	960.30.350	960.30.400
.300	**320**	960.30.375	960.30.425

* Available upon request.

E6.40/R6.40

Width index	B_{Ri} [mm]	Part No. attached inwards	Part No. attached outwards
.040	**64**	upon request	960.30.175
.050	**74**	960.30.125	960.30.175
.052	**76**	960.30.125	960.30.175
.062	**86**	960.30.150	960.30.200
.070	**94**	960.30.150	960.30.200
.075	**99**	960.30.150	960.30.200
.087	**111**	960.30.175	960.30.225
.100	**124**	960.30.175	960.30.225
.125	**149**	960.30.200	960.30.250
.150	**174**	960.30.225	960.30.275
.175	**199**	960.30.250	960.30.300
.200	**224**	960.30.275	960.30.325
.225	**249**	960.30.300	960.30.350
.250	**274**	960.30.325	960.30.375
.275	**299**	960.30.350	960.30.400
.300	**324**	960.30.375	960.30.425

Heavy-duty version for high load applications

- This aluminium SuperTrough is also available for plant manufacturing with special heavy-duty brackets for secure connection
- The installation sets are fastened outside on the guide trough
- Installation set Part No. **972.50.**



Aluminium SuperTrough | 972.30.SL / 972.32.SL

Product range | Trough height: 117mm

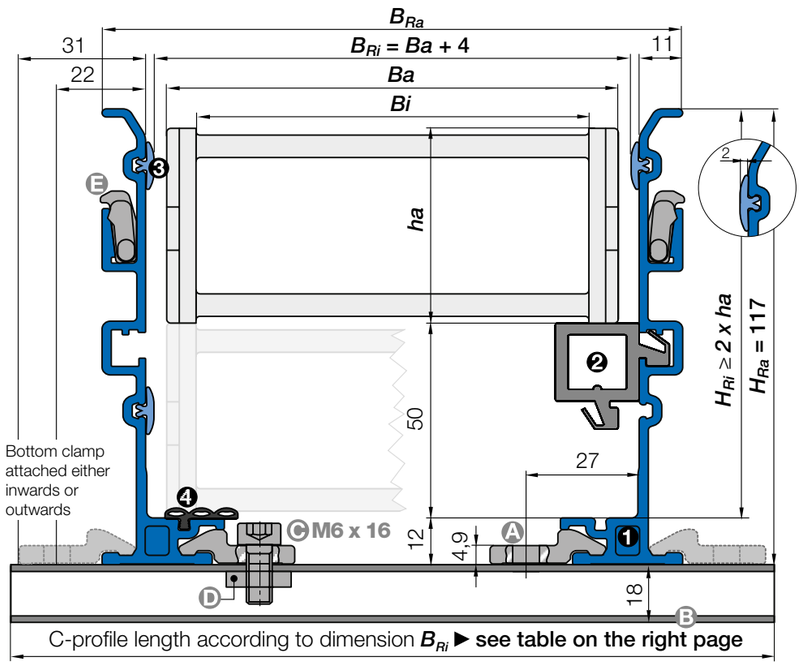

C-profile length according to dimension B_{Ri} ▶ see table on the right page

For the following series
E2.1
● E2.38/E2C.38
E2/000
● 2700
E2 R
● R58

Note: The inner width of the guide through and the C-profile length of the installation set can differ according to the bracket you choose. Please call us.

Full sets

Full trough side part sets ❶ | ❷ | ❸ | ❹ (2m pieces each)	Part No.	Weight
1 set with 2 trough side parts, incl. glide strips, without glide bars	**972.30.SLA**[1)]	≈ 6.00kg
1 set with 2 trough side parts including Glide strips, with glide bars	**972.32.SL**[2)]	≈ 7.40kg

1) For additional noise dampening strip, please add index **A** to the Part No. Example: **Part No. 972.30.SLA**

2) 1 set of 2 trough side parts, incl. glide strips, with high-speed glide bars, upon request.

Full installation set Ⓐ | Ⓑ | Ⓒ | Ⓓ | Ⓔ	Part No.	Weight
1 installation set without C-profile	**960.30**	≈ 0.06kg
1 installation set with C-profile (C-profile length according to dimension B_{Ri})	**960.30.**XXX[3)]	upon request

3) Please add the C-profile length XXX as shown on the tables. Example: **Part No. 960.30.**200

Individual parts

Components as individual parts, trough	Part No.	Weight
❶ 1 trough side part, 2m section	**72.11**	≈ 2.94kg
❷ 1 glide bar, 2m section	**82.79**[4)]	≈ 0.60kg
❸ 1 glide strip, plastic, 2m section	**75.01**	≈ 0.06kg
❹ 1 noise dampening strip, 2m section	**75.67.H.2000**	≈ 0.16kg

4) High-speed glide bars, upon request.

Components as individual parts, installation set	Part No.	Weight
Ⓐ 1 bottom clamp, aluminium individual	**75.40**	≈ 0.03kg
Ⓑ 1 C-profile, individual (C-profile length according to dimension B_{Ri})	**92.52.**XXX**.E**[5)]	≈ 0.90kg/m
Ⓒ 1 screw M6 x 16, individual	**MAT 0040209 / M6 x 16**	
Ⓓ 1 glide nut, individual	**MAT 0040057 / M6**	
Ⓔ 1 interface connector, individual	**75.60**	

5) Please add the C-profile length XXX as shown on the tables. Example: **Part No. 92.52.**200**.E**. For stainless steel, please add index**.E**.

Options

Additional options for simple fastening without drilling	Part No.
1 fixed end module set - to attach the e-chain® into the aluminium SuperTrough	**972.80.4**
Trough clip - for guiding cables on the outside of a aluminium SuperTrough	**SLC.40.17**

C-profile lengths (according to Dim. B_{Ri}) | Basic version

972.30.SL
972.32.SL

E2C.38/E2C.38			
Width index	B_{Ri} [mm]	Part No. attached inwards	Part No. attached outwards
.050	**71**	upon request	960.30.175
.065	**86**	960.30.150	960.30.200
.075	**96**	960.30.150	960.30.200
.090	**111**	960.30.175	960.30.225
.100	**121**	960.30.175	960.30.225
.125	**146**	960.30.200	960.30.250
.150	**171**	960.30.225	960.30.275
.175	**199**	960.30.250	960.30.300

2700			
Width index	B_{Ri} [mm]	Part No. attached inwards	Part No. attached outwards
.05	**70**	upon request	960.30.175
.06	**85**	960.30.150	960.30.200
.07	**95**	960.30.150	960.30.200
.09	**110**	960.30.175	960.30.225
.10	**120**	960.30.175	960.30.225
.12	**145**	960.30.200	960.30.250
.15	**170**	960.30.225	960.30.275
.17	**198**	960.30.250	960.30.300

R58			
Width index	B_{Ri} [mm]	Part No. attached inwards	Part No. attached outwards
.050	**70**	upon request	960.30.175
.075	**95**	960.30.150	960.30.200
.100	**120**	960.30.175	960.30.225
.125	**145**	960.30.200	960.30.250
.150	**170**	960.30.225	960.30.275
.175	**195**	960.30.250	960.30.300
.200	**220**	960.30.275	960.30.325

Heavy-duty version for high load applications

- This aluminium SuperTrough is also available for plant manufacturing with special heavy-duty brackets for secure connection
- The installation sets are fastened outside on the guide trough
- Installation set Part No. **972.50.**



Aluminium SuperTrough | 973.30.SL / 973.31.SLH

Product range | Trough height: 144mm

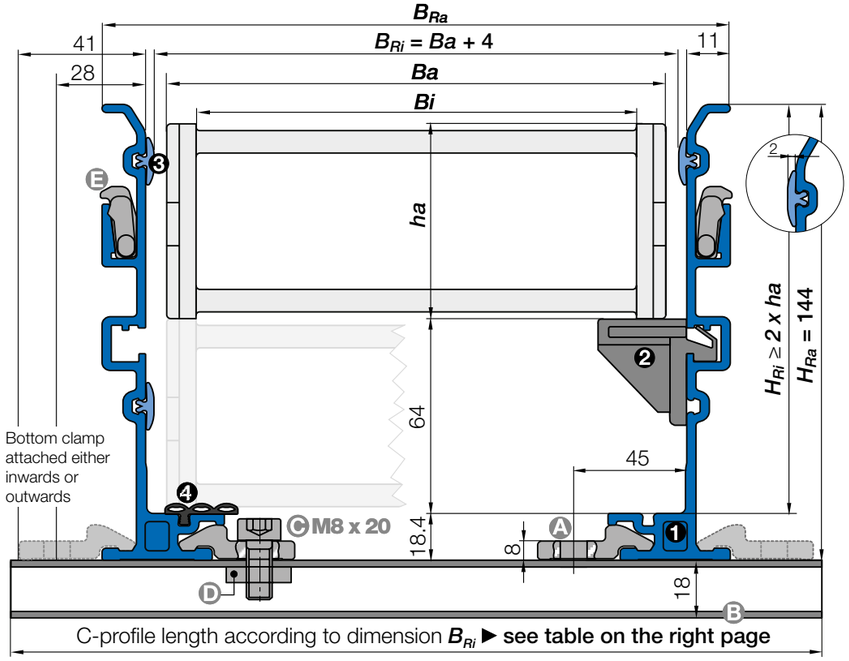

C-profile length according to dimension B_{Ri} ▶ see table on the right page

For the following series
E2.1
● E2.48
E2/000
● 3500
E2 R
● R68
E4Q
● E4Q.44/H4Q.44
E4.1
● E4.42/H4.42/R4.42
E4.1L
● E4.48L/R4.48L
E6
● E6.52/R6.52

Note: The inner width of the guide through and the C-profile length of the installation set can differ according to the bracket you choose. Please call us.

Full sets

Full trough side part sets ❶ | ❷ | ❸ | ❹ (2m pieces each)	Part No.	Weight
1 set with 2 trough side parts, incl. glide strips, without glide bars	**973.30.SLA**[1)]	≈ 8.00kg
1 set with 2 trough side parts, incl. glide strips, with high-speed glide bars	**973.31.SLH**[2)]	≈ 9.60kg

1) For additional noise dampening strip, please add index **A** to the Part No. Example: **Part No. 973.30.SLA**

2) 1 set of 2 trough side parts, incl. glide strips and with standard glide bars is still available **Part No. 973.31.SL**

Full installation set Ⓐ | Ⓑ | Ⓒ | Ⓓ | Ⓔ	Part No.	Weight
1 installation set without C-profile	**960.40**	≈ 0.08kg
1 installation set with C-profile (C-profile length according to dimension B_{Ri})	**960.40.**XXX[3)]	upon request

3) Please add the C-profile length XXX as shown on the tables. Example: **Part No. 960.40.200**

Individual parts

Components as individual parts, trough	Part No.	Weight
❶ 1 trough side part, 2m section	**73.11**	≈ 3.94kg
❷ 1 high-speed glide bar, 0.5m.	**GB.31.500**[4)]	≈ 0.18kg
❸ 1 glide strip, plastic, 2m section	**75.01**	≈ 0.06kg
❹ 1 noise dampening strip, 2m section	**75.68.H.2000**	≈ 0.38kg

4) Conventional glide bar as individual part, 2m piece still available, **Part No. 83.79**

Components as individual parts, installation set	Part No.	Weight
Ⓐ 1 bottom clamp, aluminium individual	**75.50**	≈ 0.04kg
Ⓑ 1 C-profile, individual (C-profile length according to dimension B_{Ri})	**92.52.**XXX**.E**[5)]	≈ 0.90kg/m
Ⓒ 1 screw M6 x 16, individual	**MAT 0040445 / M8 x 20**	
Ⓓ 1 glide nut, individual	**MAT 0040413 / M8**	
Ⓔ 1 interface connector, individual	**75.60**	

5) Please add the C-profile length XXX as shown on the tables. Example: **Part No. 92.52.200.E**. For stainless steel, please add index **.E**.

Options

Additional options for simple fastening without drilling	Part No.
1 fixed end module set - to attach the e-chain® into the aluminium SuperTrough	**973.80.5**[A)] **/ 973.81.5**[B)]
Trough clip - for guiding cables on the outside of a aluminium SuperTrough	**SLC.40.17**

A) For series: E2.48, 3500, R68 B) For series: E4Q.44/H4Q.44, E4.48L/R4.48L, E4.42/H4.42/R4.42, E6.52/R6.52

C-profile lengths (according to Dim. B_{Ri}) | Basic version

E2.48

Width index	B_{Ri} [mm]	Part No. attached inwards	Part No. attached outwards
.050	**76**	upon request	960.40.200
.075	**101**	upon request	960.40.225
.100	**126**	960.40.175	960.40.250
.115	**141**	960.40.200	960.40.275
.125	**151**	960.40.200	960.40.275
.150	**176**	960.40.225	960.40.300
.175	**201**	960.40.250	960.40.325
.200	**226**	960.40.275	960.40.350
.225	**251**	960.40.300	960.40.375
.250	**276**	960.40.325	960.40.400

3500

Width index	B_{Ri} [mm]	Part No. attached inwards	Part No. attached outwards
.050	**74**	upon request	960.40.200
.075	**99**	upon request	960.40.225
.100	**124**	960.40.175	960.40.250
.115	**139**	960.40.200	960.40.275
.125	**149**	960.40.200	960.40.275
.150	**174**	960.40.225	960.40.300
.175	**199**	960.40.250	960.40.325
.200	**224**	960.40.275	960.40.350
.225	**249**	960.40.300	960.40.375
.250	**274**	960.40.325	960.40.400

R68

Width index	B_{Ri} [mm]	Part No. attached inwards	Part No. attached outwards
.050	**72**	upon request	960.40.200
.075	**97**	upon request	960.40.225
.100	**122**	960.40.175	960.40.250
.115	**137**	960.40.200	960.40.275
.125	**147**	960.40.200	960.40.275
.150	**172**	960.40.225	960.40.300
.175	**197**	960.40.250	960.40.325
.200	**222**	960.40.275	960.40.350
.225	**247**	960.40.300	960.40.375
.250	**272**	960.40.325	960.40.400

E4Q.44/H4Q.44

Width index	B_{Ri} [mm]	Part No. attached inwards	Part No. attached outwards
.075	**105**	upon request	960.40.225
.087	**118**	960.40.175	960.40.250
.100	**130**	960.40.200	960.40.250
.108	**138**	960.40.200	960.40.275
.112	**143**	960.40.200	960.40.275
.125	**155**	960.40.225	960.40.275
.137	**168**	960.40.225	960.40.300
.150	**180**	960.40.250	960.40.300
.162	**193**	960.40.250	960.40.325
.168	**198**	960.40.250	960.40.325
.175	**205**	960.40.275	960.40.325
.187	**218**	960.40.275	960.40.350
.200	**230**	960.40.300	960.40.350
.212	**243**	960.40.300	960.40.375
.225	**255**	960.40.325	960.40.375
.237	**268**	960.40.325	960.40.400
.250	**280**	960.40.350	960.40.400
.262	**293**	960.40.350	960.40.425
.275	**305**	960.40.375	960.40.425
.287	**318**	960.40.375	960.40.450
.300	**330**	960.40.400	960.40.450
.312*	**343**	960.40.400	960.40.475
.325*	**355**	960.40.425	960.40.475
.337*	**368**	960.40.425	960.40.500
.350	**380**	960.40.450	960.40.500
.362*	**393**	960.40.450	960.40.525
.375	**406**	960.40.475	960.40.525
.387	**418**	960.40.475	960.40.550
.400	**430**	960.40.500	960.40.550

* Available upon request.

E4.42/H4.42/R4.42

Width index	B_{Ri} [mm]	Part No. attached inwards	Part No. attached outwards
.05	**80**	upon request	960.40.200
.06	**98**	upon request	960.40.225
.07	**105**	upon request	960.40.225
.087	**118**	960.40.175	960.40.250
.097	**127**	960.40.175	960.40.250
.10	**130**	960.40.200	960.40.250
.11	**138**	960.40.200	960.40.275
.112	**143**	960.40.200	960.40.275
.12	**155**	960.40.225	960.40.275
.137	**168**	960.40.225	960.40.300
.15	**180**	960.40.250	960.40.300
.162	**193**	960.40.250	960.40.325
.17	**198**	960.40.250	960.40.325
.18	**205**	960.40.275	960.40.325
.187	**218**	960.40.275	960.40.350
.20	**230**	960.40.300	960.40.350
.212	**243**	960.40.300	960.40.375
.23	**255**	960.40.325	960.40.375
.237	**268**	960.40.325	960.40.400
.25	**280**	960.40.350	960.40.400
.262	**293**	960.40.350	960.40.425
.28	**305**	960.40.375	960.40.425
.29	**318**	960.40.375	960.40.450
.30	**330**	960.40.400	960.40.450
.312	**343**	960.40.400	960.40.475
.325	**355**	960.40.425	960.40.475
.337	**368**	960.40.425	960.40.500
.350	**380**	960.40.450	960.40.500
.362	**393**	960.40.450	960.40.525
.375	**406**	960.40.475	960.40.525
.387	**418**	960.40.475	960.40.550
.400	**430**	960.40.500	960.40.550

E4.48L/R4.48L

Width index	B_{Ri} [mm]	Part No. attached inwards	Part No. attached outwards
.050	**74**	upon request	960.40.200
.062	**86**	upon request	960.40.200
.075	**99**	upon request	960.40.225
.087	**111**	960.40.175	960.40.225
.100	**124**	960.40.175	960.40.250
.105	**125**	960.40.200	960.40.250
.112	**136**	960.40.200	960.40.250
.125	**149**	960.40.225	960.40.275
.137	**161**	960.40.225	960.40.275
.150	**174**	960.40.250	960.40.300
.162	**186**	960.40.250	960.40.300
.175	**199**	960.40.275	960.40.325
.187	**211**	960.40.275	960.40.325
.200	**224**	960.40.300	960.40.350
.212	**236**	960.40.300	960.40.350
.225	**249**	960.40.325	960.40.375
.237	**261**	960.40.325	960.40.375
.250	**274**	960.40.325	960.40.375
.262	**282**	960.40.325	960.40.375
.275*	**295**	960.40.350	960.40.400
.287*	**307**	960.40.350	960.40.400
.300	**320**	960.40.375	960.40.425

* Available upon request.

E6.52/R6.52

Width index	B_{Ri} [mm]	Part No. attached inwards	Part No. attached outwards
.040	**68**	upon request	960.40.200
.050	**78**	upon request	960.40.200
.052	**80**	upon request	960.40.225
.062	**90**	upon request	960.40.225
.070	**98**	upon request	960.40.225
.075	**103**	upon request	960.40.225
.087	**115**	upon request	960.40.250
.100	**128**	960.40.175	960.40.250
.125	**153**	960.40.200	960.40.275
.150	**178**	960.40.225	960.40.300
.175	**203**	960.40.250	960.40.325
.200	**228**	960.40.275	960.40.350
.225	**253**	960.40.300	960.40.375
.250	**278**	960.40.325	960.40.400
.275	**303**	960.40.350	960.40.425
.300	**328**	960.40.375	960.40.450

Heavy-duty version for high load applications

- This aluminium SuperTrough is also available for plant manufacturing with special heavy-duty brackets for secure connection
- The installation sets are fastened outside on the guide trough
- Installation set Part No. **973.50.**



Aluminium SuperTrough | 974.30.SL / 974.31.SLH

Product range | Trough height: 184mm

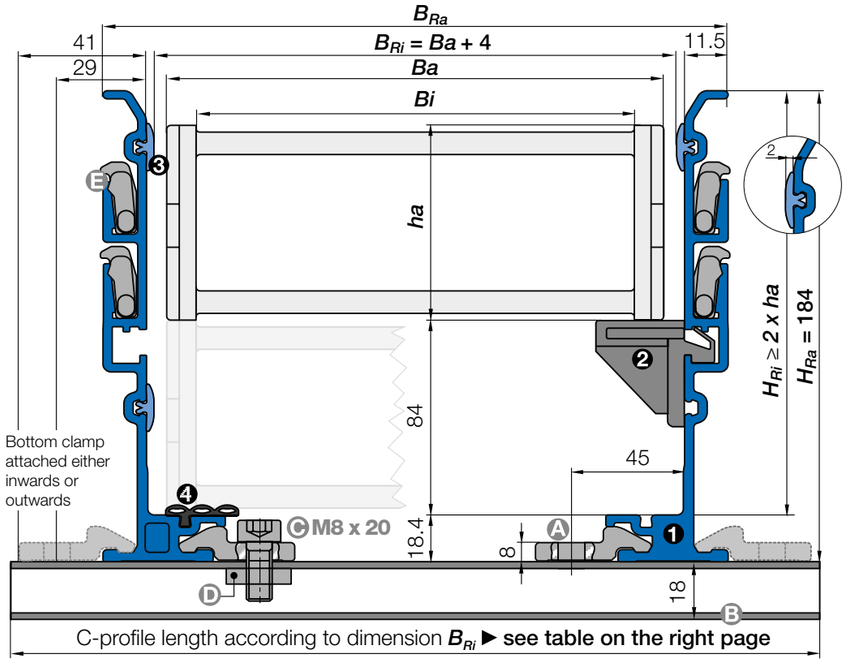

For the following series
E4Q
● E4Q.58/H4Q.58
E4.1
● E4.56/H4.56/R4.56
E4.1L
● E4.64L
E4/light
● 14240/14340
● 14040/14140/R18840
E6
● E6.62
E4/4HD**
● 4040HD/8840HD

Note: The inner width of the guide through and the C-profile length of the installation set can differ according to the bracket you choose. Please call us.

Full sets

Full trough side part sets ❶ | ❷ | ❸ | ❹ (2m pieces each)	Part No.	Weight
1 set with 2 trough side parts, incl. glide strips, without glide bars	**974.30.SLA**[1)]	≈ 10.0kg
1 set with 2 trough side parts, incl. glide strips, with high-speed glide bars	**974.31.SLH**[2)]	≈ 11.6kg

1) For additional noise dampening strip, please add index **A** to the Part No. Example: **Part No. 974.30.SLA**

2) 1 set of 2 trough side parts, incl. glide strips and with standard glide bars is still available **Part No. 974.31.SL**

Full installation set Ⓐ | Ⓑ | Ⓒ | Ⓓ | Ⓔ	Part No.	Weight
1 installation set without C-profile	**960.50**	≈ 0.08kg
1 installation set with C-profile (C-profile length according to dimension B_{Ri})	**960.50.**XXX[3)]	upon request

3) Please add the C-profile length XXX as shown on the tables. Example: **Part No. 960.50.200**

Individual parts

Components as individual parts, trough	Part No.	Weight
❶ 1 trough side part, 2m section	**74.11**	≈ 4.94kg
❷ 1 high-speed glide bar, 0.5m.	**GB.31.500**[4)]	≈ 0.18kg
❸ 1 glide strip, plastic, 2m section	**75.01**	≈ 0.06kg
❹ 1 noise dampening strip, 2m section	**75.68.H.2000**	≈ 0.38kg

4) Conventional glide bar as individual part, 2m piece still available, **Part No. 83.79**

Components as individual parts, installation set	Part No.	Weight
Ⓐ 1 bottom clamp, aluminium individual	**75.50**	≈ 0.04kg
Ⓑ 1 C-profile, individual (C-profile length according to dimension B_{Ri})	**92.52.**XXX**.E**[5)]	≈ 0.90kg/m
Ⓒ 1 screw M6 x 16, individual	**MAT 0040445 / M8 x 20**	
Ⓓ 1 glide nut, individual	**MAT 0040413 / M8**	
Ⓔ 1 interface connector, individual	**75.60**	

5) Please add the C-profile length XXX as shown on the tables. Example: **Part No. 92.52.125.E**. For stainless steel, please add index **.E**.

Options

Additional options for simple fastening without drilling	Part No.
1 fixed end module set - to attach the e-chain® into the aluminium SuperTrough	**974.80.5**[A)] **/ 974.81.5**[B)]
Trough clip - for guiding cables on the outside of a aluminium SuperTrough	**SLC.40.17**

A) For series: E4Q.58/H4Q.58, E4.56/H4.56/R4.56, E6.62 B) For series: 14040/14140/R18840, 14240/14340

C-profile lengths (according to Dim. B_{Ri}) | Basic version

E4Q.58/H4Q.58				E4.56/H4.56/R4.56				E4.64L				14040/14140/R18840				14240/14340				E6.62			
Width index	B_{Ri} [mm]	Part No. attached inwards	Part No. attached outwards	Width index	B_{Ri} [mm]	Part No. attached inwards	Part No. attached outwards	Width index	B_{Ri} [mm]	Part No. attached inwards	Part No. attached outwards	Width index	B_{Ri} [mm]	Part No. attached inwards	Part No. attached outwards	Width index	B_{Ri} [mm]	Part No. attached inwards	Part No. attached outwards	Width index	B_{Ri} [mm]	Part No. attached inwards	Part No. attached outwards
.100	**138**	960.50.200	960.50.275	.05	**88**	upon request	960.50.225	.75	**105**	upon request	960.50.225	.05	**80**	upon request	960.50.200	.05	**80**	upon request	960.50.200	.05	**90**	upon request	960.50.225
.112	**151**	960.50.200	960.50.275	.055	**93**	upon request	960.50.225	.87	**117**	960.50.175	960.50.250	.055	**85**	upon request	960.50.200	.06	**98**	upon request	960.50.225	.06	**108**	upon request	960.50.225
.125	**163**	960.50.225	960.50.300	.06	**103**	upon request	960.50.225	.100	**127**	960.50.175	960.50.250	.06	**95**	upon request	960.50.225	.07	**105**	upon request	960.50.225	.07	**115**	upon request	960.50.250
.137	**176**	960.50.225	960.50.300	.07	**113**	upon request	960.50.250	.112	**142**	960.50.200	960.50.275	.07	**105**	upon request	960.50.225	.087	**118**	960.50.175	960.50.250	.087	**127**	960.50.175	960.50.250
.150	**188**	960.50.250	960.50.325	.08	**125**	960.50.175	960.50.250	.125	**155**	960.50.225	960.50.275	.08	**117**	960.50.175	960.50.225	.097	**127**	960.50.175	960.50.250	.097	**137**	960.50.200	960.50.275
.162	**201**	960.50.250	960.50.325	.10	**138**	960.50.200	960.50.275	.137	**167**	960.50.225	960.50.300	.10	**130**	960.50.200	960.50.250	.10	**130**	960.50.200	960.50.250	.10	**140**	960.50.200	960.50.275
.175	**213**	960.50.275	960.50.350	.11	**151**	960.50.200	960.50.275	.150	**180**	960.50.250	960.50.300	.11	**143**	960.50.200	960.50.275	.11	**138**	960.50.200	960.50.275	.11	**148**	960.50.200	960.50.275
.187	**226**	960.50.275	960.50.350	.12	**163**	960.50.225	960.50.300	.175	**205**	960.50.275	960.50.325	.12	**155**	960.50.225	960.50.275	.112	**143**	960.50.200	960.50.275	.112	**152**	960.50.200	960.50.275
.200	**238**	960.50.300	960.50.375	.13	**176**	960.50.225	960.50.300	.187	**217**	960.50.275	960.50.350	.13	**168**	960.50.225	960.50.300	.12	**155**	960.50.225	960.50.275	.12	**165**	960.50.225	960.50.300
.212	**251**	960.50.300	960.50.375	.15	**188**	960.50.250	960.50.325	.200	**230**	960.50.300	960.50.350	.15	**180**	960.50.250	960.50.300	.137	**168**	960.50.225	960.50.300	.137	**177**	960.50.225	960.50.300
.225	**263**	960.50.325	960.50.400	.16	**201**	960.50.250	960.50.325	.212	**242**	960.50.300	960.50.375	.16	**193**	960.50.250	960.50.325	.15	**180**	960.50.250	960.50.300	.15	**190**	960.50.250	960.50.325
.237	**276**	960.50.325	960.50.400	.169	**208**	960.50.275	960.50.325	.225	**255**	960.50.325	960.50.375	.169	**200**	960.50.250	960.50.325	.162	**193**	960.50.250	960.50.325	.162	**202**	960.50.250	960.50.325
.250	**288**	960.50.350	960.50.425	.17	**213**	960.50.275	960.50.350	.250	**280**	960.50.350	960.50.400	.17	**205**	960.50.275	960.50.325	.17	**198**	960.50.250	960.50.325	.17	**208**	960.50.275	960.50.325
.262	**301**	960.50.350	960.50.425	.182	**221**	960.50.275	960.50.350	.300	**330**	960.50.400	960.50.450	.182	**213**	960.50.275	960.50.350	.18	**205**	960.50.275	960.50.325	.18	**215**	960.50.275	960.50.350
.275	**313**	960.50.375	960.50.450	.18	**226**	960.50.275	960.50.350	.325	**355**	960.50.425	960.50.475	.18	**218**	960.50.275	960.50.350	.187	**218**	960.50.275	960.50.350	.187	**227**	960.50.275	960.50.350
.287	**326**	960.50.375	960.50.450	.20	**238**	960.50.300	960.50.375	.350	**380**	960.50.450	960.50.500	.20	**230**	960.50.300	960.50.350	.20	**230**	960.50.300	960.50.350	.20	**240**	960.50.300	960.50.375
.300	**338**	960.50.400	960.50.475	.207	**207**	960.50.300	960.50.375					.207	**238**	960.50.300	960.50.375	.212	**243**	960.50.300	960.50.375	.212	**252**	960.50.300	960.50.375
.312	**351**	960.50.400	960.50.475	.21	**251**	960.50.300	960.50.375					.21	**243**	960.50.300	960.50.375	.23	**255**	960.50.325	960.50.375	.23	**265**	960.50.325	960.50.400
.325	**363**	960.50.425	960.50.500	.22	**263**	960.50.325	960.50.400					.22	**255**	960.50.325	960.50.375	.237	**268**	960.50.325	960.50.400	.237	**277**	960.50.325	960.50.400
.337	**376**	960.50.425	960.50.500	.23	**276**	960.50.325	960.50.400					.23	**268**	960.50.325	960.50.400	.25	**280**	960.50.350	960.50.400	.25	**290**	960.50.350	960.50.425
.350	**388**	960.50.450	960.50.525	.25	**288**	960.50.350	960.50.425					.25	**280**	960.50.350	960.50.400	.262	**293**	960.50.350	960.50.425	.262	**302**	960.50.350	960.50.425
.362	**401**	960.50.450	960.50.525	.26	**301**	960.50.350	960.50.425					.26	**293**	960.50.350	960.50.425	.28	**305**	960.50.375	960.50.425	.28	**315**	960.50.375	960.50.450
.375	**413**	960.50.475	960.50.550	.27	**313**	960.50.375	960.50.450					.27	**305**	960.50.375	960.50.425	.29	**318**	960.50.375	960.50.450	.29	**327**	960.50.375	960.50.450
.387	**426**	960.50.475	960.50.550	.28	**326**	960.50.375	960.50.450					.28	**318**	960.50.375	960.50.450	.30	**330**	960.50.400	960.50.450	.30	**340**	960.50.400	960.50.475
.400	**438**	960.50.500	960.50.575	.30	**338**	960.50.400	960.50.475					.30	**330**	960.50.400	960.50.450	.312	**343**	960.50.400	960.50.475	.312	**352**	960.50.400	960.50.475
.412	**451**	960.50.500	960.50.575	.31	**351**	960.50.400	960.50.475					.31	**343**	960.50.400	960.50.475	.325	**355**	960.50.425	960.50.475	.325	**365**	960.50.425	960.50.500
.425	**463**	960.50.525	960.50.600	.32	**363**	960.50.425	960.50.500					.32	**355**	960.50.425	960.50.475	.337	**368**	960.50.425	960.50.500	.337	**377**	960.50.425	960.50.500
.437*	476	960.50.525	960.50.600	.33	**376**	960.50.425	960.50.500					.33	**368**	960.50.425	960.50.500	.350	**380**	960.50.450	960.50.500	.350	**390**	960.50.450	960.50.525
.450	**488**	960.50.550	960.50.625	.35	**388**	960.50.450	960.50.525					.35	**380**	960.50.450	960.50.500	.362	**393**	960.50.450	960.50.525	.362	**402**	960.50.450	960.50.525
.462*	501	960.50.550	960.50.625	.36	**401**	960.50.450	960.50.525					.36	**393**	960.50.450	960.50.525	.375	**405**	960.50.475	960.50.525	.375	**415**	960.50.475	960.50.550
.475*	513	960.50.575	960.50.650	.37	**413**	960.50.475	960.50.550					.37	**405**	960.50.475	960.50.525	.387	**418**	960.50.475	960.50.550	.387	**427**	960.50.475	960.50.550
.487*	526	960.50.575	960.50.650	.38	**426**	960.50.475	960.50.550					.38	**418**	960.50.475	960.50.550	.400	**430**	960.50.500	960.50.550	.400	**440**	960.50.500	960.50.575
.500	**538**	960.50.600	960.50.675	.40	**438**	960.50.500	960.50.575					.40	**430**	960.50.500	960.50.550								
.512*	551	960.50.600	960.50.675	.41	**451**	960.50.500	960.50.575					.41	**443**	960.50.500	960.50.575								
.525*	563	960.50.625	960.50.700	.42	**463**	960.50.525	960.50.600					.42	**455**	960.50.525	960.50.575								
.537*	576	960.50.625	960.50.700	.43	**476**	960.50.525	960.50.600					.43	**468**	960.50.525	960.50.600								
.550*	588	960.50.650	960.50.725	.45	**488**	960.50.550	960.50.625					.45	**480**	960.50.550	960.50.600								
.562*	600	960.50.650	960.50.725	.46	**501**	960.50.550	960.50.625					.46	**493**	960.50.550	960.50.625								
				.47	**513**	960.50.575	960.50.650					.47	**505**	960.50.575	960.50.625								
				.48	**526**	960.50.575	960.50.650					.48	**518**	960.50.575	960.50.650								
				.50	**538**	960.50.600	960.50.675					.50	**530**	960.50.600	960.50.650								
				.51	**551**	960.50.600	960.50.675					.51	**543**	960.50.600	960.50.675								
				.52	**563**	960.50.625	960.50.700					.52	**555**	960.50.625	960.50.675								
				.53	**576**	960.50.625	960.50.700					.53	**568**	960.50.625	960.50.700								
				.55	**588**	960.50.650	960.50.725					.55	**580**	960.50.650	960.50.700								
				.60	**638**	960.50.700	960.50.775					.60	**630**	960.50.700	960.50.750								

* Available upon request.

E4/4HD - we recommend the heavy-duty version for the 4040HD/8840HD series for heavy-duty applications. You can configure it online at ▶ www.igus.eu/alu-guide**

Heavy-duty version for high load applications

- This aluminium SuperTrough is also available for plant manufacturing with special heavy-duty brackets for secure connection
- The installation sets are fastened outside on the guide trough
- Installation set Part No. **974.50.**



Aluminium SuperTrough | 975.30.SL / 975.31.SLH

Product range | Trough height: 236mm

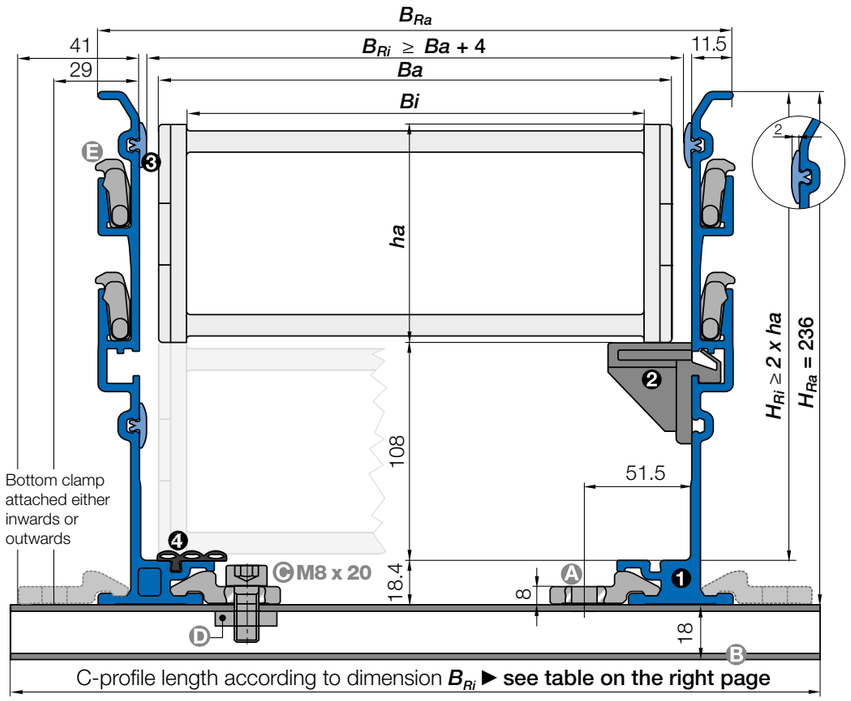

C-profile length according to dimension B_{Ri} ▶ see table on the right page

For the following series
E4Q
● E4Q.82/H4Q.82
E4.1
● E4.80/H4.80/R4.80
E4/light
● 15050/15150/R19850
● 15250/15350
E6
● E6.80
E4/4HD**
● 5050HD/9850HD

Note: The inner width of the guide through and the C-profile length of the installation set can differ according to the bracket you choose. Please call us.

Full sets

Full trough side part sets ❶ | ❷ | ❸ | ❹ (2m pieces each)	Part No.	Weight
1 set with 2 trough side parts, incl. glide strips, without glide bars	**975.30.SLA**[1)]	≈ 14.0kg
1 set with 2 trough side parts, incl. glide strips, with high-speed glide bars	**975.31.SLH**[2)]	≈ 15.4kg

1) For additional noise dampening strip, please add index **A** to the Part No. Example: **Part No. 975.30.SLA**

2) 1 set of 2 trough side parts, incl. glide strips and with standard glide bars is still available **Part No. 975.31.SL**

Full installation set Ⓐ | Ⓑ | Ⓒ | Ⓓ | Ⓔ	Part No.	Weight
1 installation set without C-profile	**960.50**	≈ 0.08kg
1 installation set with C-profile (C-profile length according to dimension B_{Ri})	**960.50.XXX**[3)]	upon request

3) Please add the C-profile length XXX as shown on the tables. Example: **Part No. 960.50.200**

Individual parts

Components as individual parts, trough	Part No.	Weight
❶ 1 trough side part, 2m section	**75.11**	≈ 6.94kg
❷ 1 high-speed glide bar, 0.5m.	**GB.31.500**[4)]	≈ 0.18kg
❸ 1 glide strip, plastic, 2m section	**75.01**	≈ 0.06kg
❹ 1 noise dampening strip, 2m section	**75.68.H.2000**	≈ 0.38kg

4) Conventional glide bar as individual part, 2m piece still available, **Part No. 83.79**

Components as individual parts, installation set	Part No.	Weight
Ⓐ 1 bottom clamp, aluminium individual	**75.50**	≈ 0.04kg
Ⓑ 1 C-profile, individual (C-profile length according to dimension B_{Ri})	**92.52.XXX.E**[5)]	≈ 0.90kg/m
Ⓒ 1 screw M6 x 16, individual	**MAT 0040445 / M8 x 20**	
Ⓓ 1 glide nut, individual	**MAT 0040413 / M8**	
Ⓔ 1 interface connector, individual	**75.60**	

5) Please add the C-profile length XXX as shown on the tables. Example: **Part No. 92.52.250.E**. For stainless steel, please add index **.E**.

Options

Additional options for simple fastening without drilling	Part No.
1 fixed end module set - to attach the e-chain® into the aluminium SuperTrough	**975.80**[A)] **/ 975.81**[B)]
Trough clip - for guiding cables on the outside of a aluminium SuperTrough	**SLC.40.17**

A) For series: E4Q.82/H4Q.82, E4.80/H4.80/R4.80, E6.80 B) For series: 15050/15150/R19850, 15250/15350

C-profile lengths (according to Dim. B_{Ri}) | Basic version

E4Q.82/H4Q.82				E4.80/H4.80/R4.80				15050/15150/R19850				15250/15350				E6.80			
Width index	B_{Ri} [mm]	Part No. attached inwards	Part No. attached outwards	Width index	B_{Ri} [mm]	Part No. attached inwards	Part No. attached outwards	Width index	B_{Ri} [mm]	Part No. attached inwards	Part No. attached outwards	Width index	B_{Ri} [mm]	Part No. attached inwards	Part No. attached outwards	Width index	B_{Ri} [mm]	Part No. attached inwards	Part No. attached outwards
.100	**154**	**960.50.225**	**960.50.275**	.05	**104**	upon request	**960.50.225**	.05	**84**	upon request	**960.50.200**	.05	**84**	upon request	960.50.200	.05	**104**	upon request	**960.50.225**
.112	**167**	**960.50.225**	**960.50.300**	.055	**109**	upon request	**960.50.225**	.055	**89**	upon request	**960.50.225**	.06	**102**	upon request	960.50.225	.06	**119**	upon request	**960.50.250**
.125	**179**	**960.50.250**	**960.50.300**	.06	**119**	upon request	**960.50.250**	.06	**99**	upon request	**960.50.225**	.07	**109**	upon request	960.50.225	.07	**129**	**960.50.200**	**960.50.250**
.137	**192**	**960.50.250**	**960.50.325**	.07	**129**	**960.50.200**	**960.50.250**	.07	**109**	upon request	**960.50.225**	.087	**121**	upon request	960.50.250	.08	**141**	**960.50.200**	**960.50.275**
.150	**204**	**960.50.275**	**960.50.325**	.08	**141**	**960.50.200**	**960.50.275**	.08	**121**	upon request	**960.50.250**	.097	**131**	upon request	960.50.250	.10	**154**	**960.50.225**	**960.50.275**
.162	**217**	**960.50.275**	**960.50.350**	.10	**154**	**960.50.225**	**960.50.275**	.10	**134**	**960.50.200**	**960.50.250**	.10	**134**	upon request	960.50.250	.11	**167**	**960.50.225**	**960.50.300**
.175	**229**	**960.50.300**	**960.50.350**	.11	**167**	**960.50.225**	**960.50.300**	.11	**146**	**960.50.200**	**960.50.275**	.11	**142**	960.50.200	960.50.250	.12	**179**	**960.50.250**	**960.50.300**
.187	**242**	**960.50.300**	**960.50.375**	.12	**179**	**960.50.250**	**960.50.300**	.12	**159**	**960.50.225**	**960.50.275**	.112	**147**	960.50.200	960.50.275	.13	**192**	**960.50.250**	**960.50.325**
.200	**254**	**960.50.325**	**960.50.375**	.13	**192**	**960.50.250**	**960.50.325**	.13	**171**	**960.50.225**	**960.50.300**	.12	**159**	960.50.225	960.50.275	.15	**204**	**960.50.275**	**960.50.325**
.212	**267**	**960.50.325**	**960.50.400**	.15	**204**	**960.50.275**	**960.50.325**	.15	**184**	**960.50.250**	**960.50.300**	.137	**171**	960.50.225	960.50.300	.16	**217**	**960.50.275**	**960.50.350**
.225	**279**	**960.50.350**	**960.50.400**	.16	**217**	**960.50.275**	**960.50.350**	.16	**196**	**960.50.250**	**960.50.325**	.15	**184**	960.50.250	960.50.300	.17	**229**	**960.50.300**	**960.50.350**
.237	**292**	**960.50.350**	**960.50.425**	.169	**224**	**960.50.275**	**960.50.350**	.169	**204**	**960.50.275**	**960.50.325**	.162	**197**	960.50.250	960.50.325	.18	**242**	**960.50.300**	**960.50.375**
.250	**304**	**960.50.375**	**960.50.425**	.17	**229**	**960.50.300**	**960.50.350**	.17	**209**	**960.50.275**	**960.50.325**	.17	**202**	960.50.250	960.50.325	.20	**254**	**960.50.325**	**960.50.375**
.262	**317**	**960.50.375**	**960.50.450**	.182	**237**	**960.50.300**	**960.50.375**	.182	**217**	**960.50.275**	**960.50.350**	.18	**209**	960.50.275	960.50.325	.21	**267**	**960.50.325**	**960.50.400**
.275	**329**	**960.50.400**	**960.50.450**	.18	**242**	**960.50.300**	**960.50.375**	.18	**221**	**960.50.275**	**960.50.350**	.187	**222**	960.50.275	960.50.350	.22	**279**	**960.50.350**	**960.50.400**
.287	**342**	**960.50.400**	960.50475	.20	**254**	**960.50.325**	**960.50.375**	.20	**234**	**960.50.300**	**960.50.350**	.20	**234**	960.50.300	960.50.350	.23	**292**	**960.50.350**	**960.50.425**
.300	**354**	**960.50.425**	**960.50.475**	.207	**262**	**960.50.325**	**960.50.400**	.207	**242**	**960.50.300**	**960.50.375**	.212	**247**	960.50.300	960.50.375	.25	**304**	**960.50.375**	**960.50.425**
.312	**367**	**960.50.425**	**960.50.500**	.21	**267**	**960.50.325**	**960.50.400**	.21	**246**	**960.50.300**	**960.50.375**	.23	**259**	960.50.325	960.50.375	.26	**317**	**960.50.375**	**960.50.450**
.325	**379**	**960.50.450**	**960.50.500**	.22	**279**	**960.50.350**	**960.50.400**	.22	**259**	**960.50.325**	**960.50.375**	.237	**272**	960.50.325	960.50.400	.27	**329**	**960.50.400**	**960.50.450**
.337	**392**	**960.50.450**	**960.50.525**	.23	**292**	**960.50.350**	**960.50.425**	.23	**271**	**960.50.325**	**960.50.400**	.25	**284**	960.50.350	960.50.400	.28	**342**	**960.50.400**	**960.50.475**
.350	**404**	**960.50.475**	**960.50.525**	.25	**304**	**960.50.375**	**960.50.425**	.25	**284**	**960.50.350**	**960.50.400**	.262	**297**	960.50.350	960.50.425	.30	**354**	**960.50.425**	**960.50.475**
.362	**417**	**960.50.475**	**960.50.550**	.26	**317**	**960.50.375**	**960.50.450**	.26	**296**	**960.50.350**	**960.50.425**	.28	**309**	960.50.375	960.50.425	.31	**367**	**960.50.425**	**960.50.500**
.375	**429**	**960.50.500**	**960.50.550**	.27	**329**	**960.50.400**	**960.50.450**	.27	**309**	**960.50.375**	**960.50.425**	.29	**322**	960.50.375	960.50.450	.32	**379**	**960.50.450**	**960.50.500**
.387	**442**	**960.50.500**	**960.50.575**	.28	**342**	**960.50.400**	960.50475	.28	**321**	**960.50.375**	**960.50.450**	.30	**334**	960.50.400	960.50.450	.33	**392**	**960.50.450**	**960.50.525**
.400	**454**	**960.50.525**	**960.50.575**	.30	**354**	**960.50.425**	**960.50.475**	.30	**334**	**960.50.400**	**960.50.450**	.312	**347**	960.50.400	960.50.475	.35	**404**	**960.50.475**	**960.50.525**
.412	**467**	**960.50.525**	960.50600	.31	**367**	**960.50.425**	**960.50.500**	.31	**346**	**960.50.400**	**960.50.475**	.325	**359**	960.50.425	960.50.475	.36	**417**	**960.50.475**	**960.50.550**
.425	**479**	**960.50.550**	**960.50.600**	.32	**379**	**960.50.450**	**960.50.500**	.32	**359**	**960.50.425**	**960.50.475**	.337	**372**	960.50.425	960.50.500	.37	**429**	**960.50.500**	**960.50.550**
.437*	**492**	960.50.550	960.50.625	.33	**392**	**960.50.450**	**960.50.525**	.33	**371**	**960.50.425**	**960.50.500**	.350	**384**	960.50.450	960.50.500	.38	**442**	**960.50.500**	**960.50.575**
.450	**504**	**960.50.575**	**960.50.625**	.35	**404**	**960.50.475**	**960.50.525**	.35	**384**	**960.50.450**	**960.50.500**	.362	**397**	960.50.450	960.50.525	.40	**454**	**960.50.525**	**960.50.575**
.462*	**517**	960.50.575	960.50.650	.36	**417**	**960.50.475**	**960.50.550**	.36	**396**	**960.50.450**	**960.50.525**	.375	**409**	960.50.475	960.50.525	.41	**467**	**960.50.525**	**960.50.600**
.475*	**529**	960.50.600	960.50.650	.37	**429**	**960.50.500**	**960.50.550**	.37	**409**	**960.50.475**	**960.50.525**	.387	**422**	960.50.475	960.50.550	.42	**479**	**960.50.550**	**960.50.600**
.487*	**542**	960.50.600	960.50.675	.38	**442**	**960.50.500**	**960.50.575**	.38	**421**	**960.50.475**	**960.50.550**	.400	**434**	960.50.500	960.50.550	.43	**492**	**960.50.550**	**960.50.625**
.500	**554**	**960.50.625**	**960.50.675**	.40	**454**	**960.50.525**	**960.50.575**	.40	**434**	**960.50.500**	**960.50.550**					.45	**504**	**960.50.575**	**960.50.625**
.512*	**567**	960.50.625	960.50.700	.41	**467**	**960.50.525**	960.50600	.41	**446**	**960.50.500**	**960.50.575**					.46	**517**	**960.50.575**	**960.50.650**
.525*	**579**	960.50.650	960.50.700	.42	**479**	**960.50.550**	**960.50.600**	.42	**459**	**960.50.525**	**960.50.575**					.47	**529**	**960.50.600**	**960.50.650**
.537*	**592**	960.50.650	960.50.725	.43	**492**	**960.50.550**	**960.50.625**	.43	**471**	**960.50.525**	**960.50.600**					.48	**542**	**960.50.600**	**960.50.675**
.550*	**604**	960.50.675	960.50.725	.45	**504**	**960.50.575**	**960.50.625**	.45	**484**	**960.50.550**	**960.50.600**					.50	**554**	**960.50.625**	**960.50.675**
.600*	**654**	960.50.725	960.50.775	.46	**517**	**960.50.575**	**960.50.650**	.46	**496**	**960.50.550**	**960.50.625**					.51	**567**	**960.50.625**	**960.50.700**
				.47	**529**	**960.50.600**	**960.50.650**	.47	**509**	**960.50.575**	**960.50.625**					.52	**579**	**960.50.650**	**960.50.700**
				.48	**542**	**960.50.600**	**960.50.675**	.48	**521**	**960.50.575**	**960.50.650**					.53	**592**	**960.50.650**	**960.50.725**
				.50	**554**	**960.50.625**	**960.50.675**	.50	**534**	**960.50.600**	**960.50.650**					.55	**604**	**960.50.675**	**960.50.725**
				.51	**567**	**960.50.625**	**960.50.700**	.51	**546**	**960.50.600**	**960.50.675**					.60	**654**	**960.50.725**	**960.50.775**
				.52	**579**	**960.50.650**	**960.50.700**	.52	**559**	**960.50.625**	**960.50.675**								
				.53	**592**	**960.50.650**	**960.50.725**	.53	**571**	**960.50.625**	**960.50.700**								
				.55	**604**	**960.50.675**	**960.50.725**	.55	**584**	**960.50.650**	960.50.700								
				.60	**654**	**960.50.725**	**960.50.775**	.60	**634**	**960.50.700**	960.50.750								

* Available upon request.

E4/4HD - we recommend the heavy-duty version for the 5050HD/9850HD series for heavy-duty applications. You can configure it online at ▶ www.igus.eu/alu-guide**

Heavy-duty version for high load applications

- This aluminium SuperTrough is also available for plant manufacturing with special heavy-duty brackets for secure connection
- The installation sets are fastened outside on the guide trough
- Installation set Part No. **975.50.**



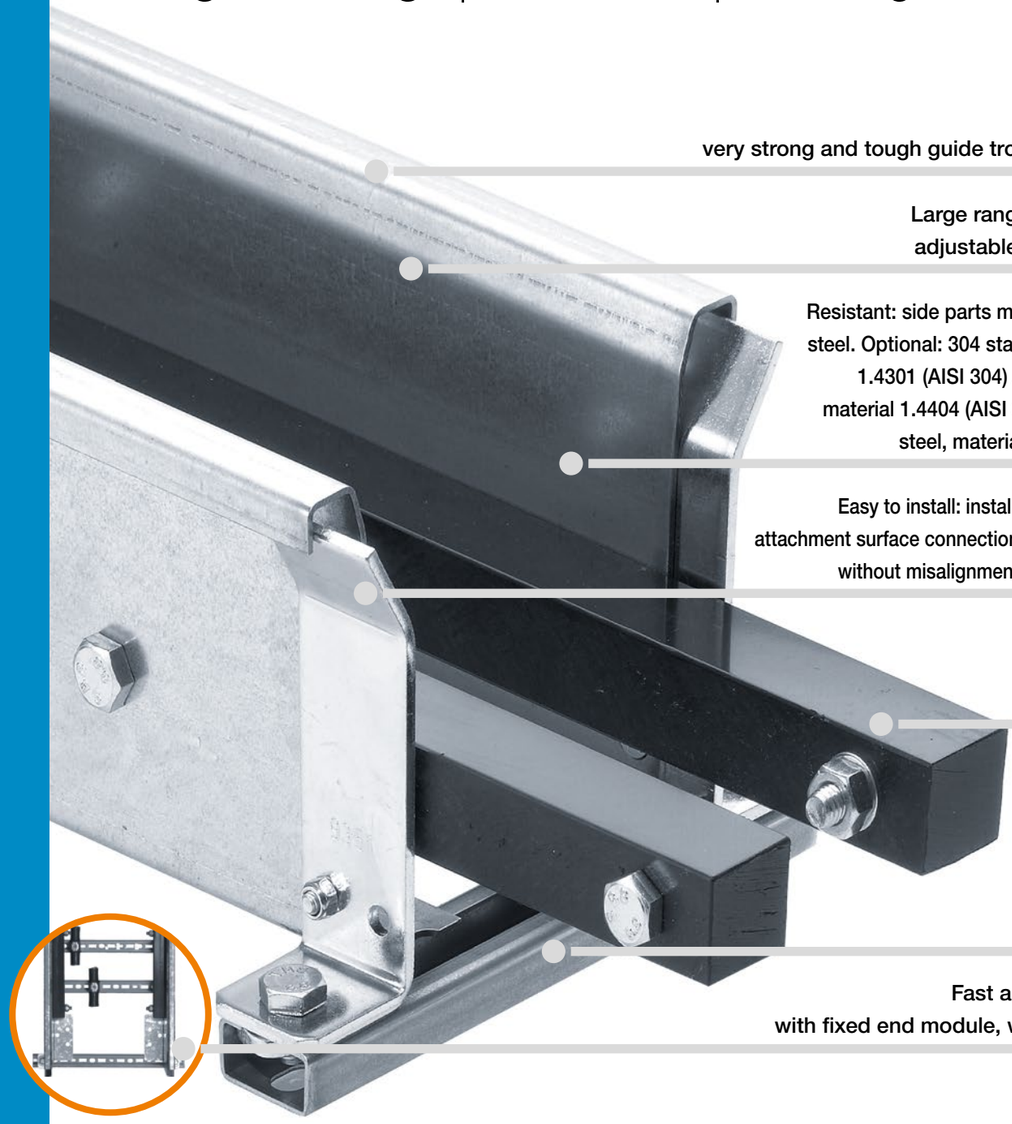

Heavy-duty:
very strong and tough guide trough made of steel

Large range, 2-piece design,
adjustable to e-chain® width

Resistant: side parts made from galvanised steel. Optional: 304 stainless steel, material 1.4301 (AISI 304) / 316 stainless steel, material 1.4404 (AISI 316L) / 316 stainless steel, material 1.4571 (AISI 316Ti)

Easy to install: installation set for joint and attachment surface connections, secure connection without misalignment and without welding

Low friction:
glide bar made
from PE

Simple
fastening:
directly on the
ground or with
C-profiles

Fast and easy mounting:
with fixed end module, without any drilling

Very stable and tough for heavy-duty applications - steel guide trough

If the igus® installation sets are used, the guide troughs are very easy to assemble. All steel guide troughs are constructed according to the same basic principle. On the following pages, you will find information about dimensions, weights and accessories according to the trough size. All sizes use a common C-profile on which the guide parts are assembled. The assembly brackets used vary in height only. Conductivity according to DIN EN 61537 - standard.

Selection table

Part No. without glide bars	Part No. with glide bars	Outer height H_{Ra} [mm]	Part No. installation set[2]	Side part material	Page Link
Steel guide trough - very tough for heavy-duty applications					
92.30	**92.31**	70	92.50	galvanised steel[1]	**510**
95.30	**95.31**	100	95.50	galvanised steel[1]	**512**
99.30	**99.31**	100	95.50	galvanised steel[1]	**514**
97.30	**97.31**	130	93.50	galvanised steel[1]	**516**
93.30	**93.31**	130	93.50	galvanised steel[1]	**518**
94.30	**94.31**	170	94.50	galvanised steel[1]	**520**
96.30	**96.31**	220	96.50	galvanised steel[1]	**522**
98.30	**98.31**	300	98.50	galvanised steel[1]	**524**
90.30	**90.31**	480	90.50	galvanised steel[1]	**526**
91.10 - 91.71[2]		48	–	Galvanised steel	**509**

1) Stainless steel option: 304 stainless steel, material 1.4301 (AISI 304) / 316 stainless steel, material 1.4404 (AISI 316L) / 316 stainless steel, material 1.4571 (AISI 316Ti).
2) Steel guide trough, 1 piece. Only for series 10, 15, B15, E2.17.

Steel guide trough | Size comparison

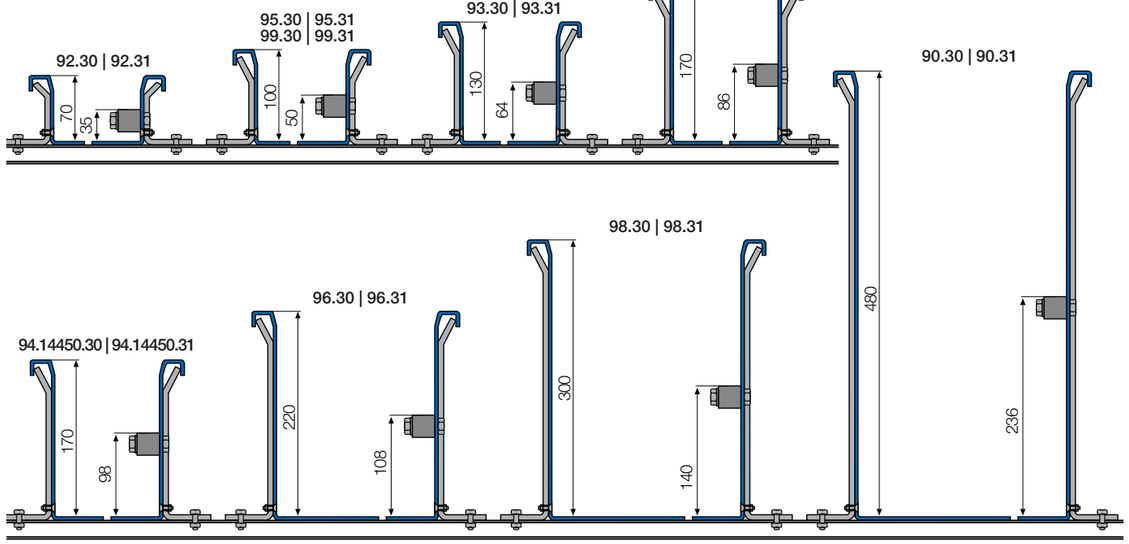

Steel guide trough | Individual parts

Guide trough components

Components

❶ Guide trough[1)]
❷ glide bar
❸ Installation set
❹ C-profile[2)]

Ba = Outer e-chain® width
Bi = Inner e-chain® width
ha = e-chain® outer height
H_{Ri} = Trough inner height
H_{Ra} = Trough outer height
B_{Ri} = Trough inner width
B_{Ra} = Trough outer width

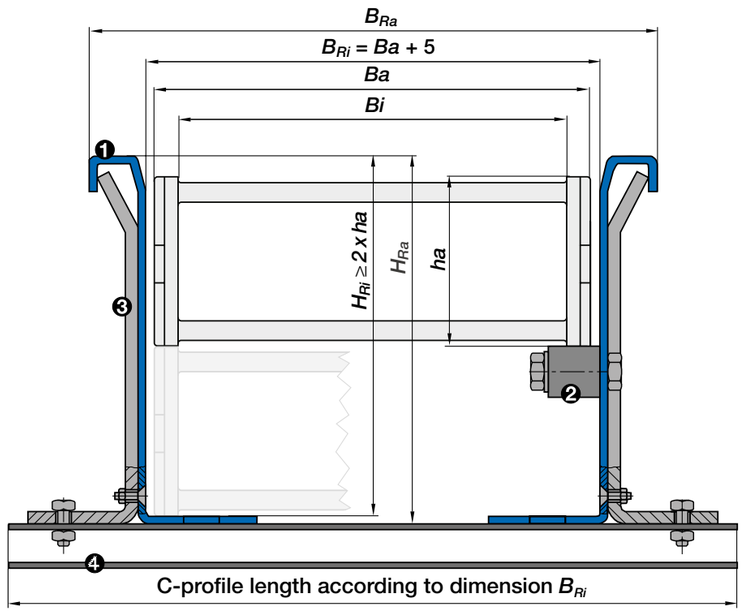

1) Guide trough side parts made from galvanised steel. Optional: 304 stainless steel, material 1.4301 (AISI 304) / 316 stainless steel, material 1.4404 (AISI 316L) / 316 stainless steel, material 1.4571 (AISI 316Ti)

2) C-profile also available in 304 stainless steel. Material 1.4301 (AISI 304)



Steel guide trough with glide bars.



Steel guide trough without glide bars.

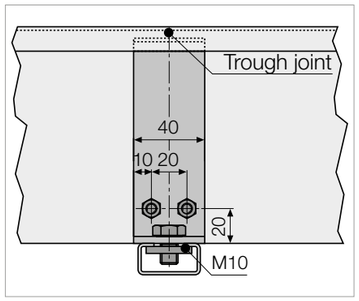

Side view of trough joint - all dimensions except for height apply to all sizes.

Steel guide trough | Configuration

Configured according to your requirements

Quickly and easily assemble the right steel guide trough for your application

- Selection of the suitable guide trough according to the e-chain® series and e-chain® width ***Bi***
- Determine the feed-in point of the cables
- Determine travel distance and thus the length of the required guide trough and the number of trough sections. (standard length of a trough side part: 2,000mm). For centre infeed, the length of the guide trough is calculated from half the travel length with and half the travel length without the glide bar
- Number and type of the installation set
- The installation set matches the igus® C-profile option
- If you have opted for an e-chain® with KMA mounting brackets, we offer a fixed end module for the quick and simple fastening of the e-chain® in the trough without drilling

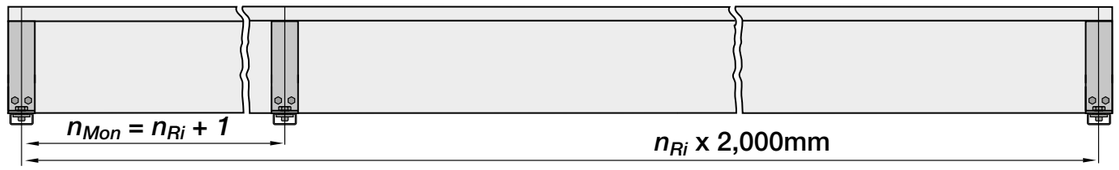

The quantity of the installation set is calculated from the number of the trough sections + 1 set.
Installation guide PDF with detailed assembly information ▶ www.igus.eu/installation-guide-pdf.

Order example | Examples based on Part No. 94.30 | 94.31

Order example: length of travel 30m - centre mounted for series E4.56.20.300.0 with B_{Ri} = 239	
1 set of 2 trough side parts, incl. glide strips, **without** glide bars **Order text: 16m guide trough without glide bars (8 sets of 2 off 2m sections)**	**94.30**
1 set of 2 trough side parts, incl. glide strips, **with** glide bars **Order text: 16m guide trough with glide bars (8 sets of 2 off 2m sections)**	**94.31**
Installation set complete **(quantity: guide trough sets + 1)** **Order text: 17 installation sets, basic**	**94.50.350**
Option: Fixed end module for a quick and easy mounting **Order text: 1 set**	**94.80.01**

Calculation - travel centre fixed: half travel length, rounded to full 2m sections = X m.
Guide trough length without glide bars + X m guide trough length with glide bars + installation sets (number of trough sections + 1).

Steel guide trough | Options

Fixed end module

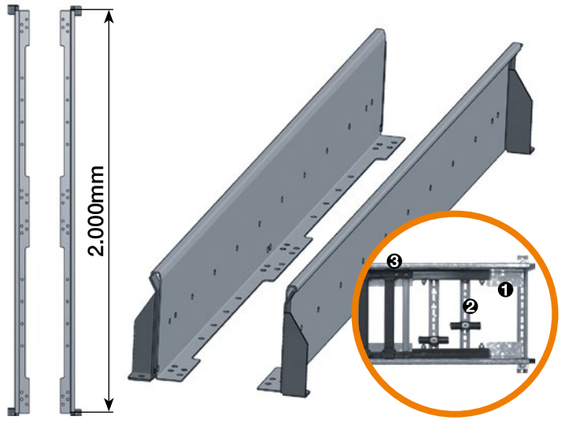

Quick and simple fastening onto the steel guide trough

- The 2,000mm long component can be used for centre-fed, end-fed and even for reverse-fed applications.
- Fast fixation of igus® mounting brackets thanks to prefabricated boreholes ❶
- Fast installation of C-profile for strain relief ❷
- Fast bolting of glide bars ❸
- Industries: power plants, coal conveyors, mining, composting plants, raw material storage, gypsum plants etc.

Fixed end module | Product range

Part No.	For steel guide troughs	For e-chains® series
90.80.01*	90.30 / 90.31	800, 840
92.80.01	92.30 / 92.31	E2.26, 2500, 255, E6.29/R6.29
93.80.01	93.30 / 93.31	E2.48, 3500, R68, E4Q.44/H4Q.44, E4.42/H4.42/R4.42, E4.48L/R4.48L, E6.52/R6.52
94.80.01	94.30 / 94.31	E4Q.58/H4Q.58, E4.56/H4.56/R4.56, E4.64L, 14040/14140 /R18840, 14240/14340, 4040HD/8840HD, E6.62
95.80.01	95.30 / 95.31	E2.38, 2700
96.80.01	96.30 / 96.31	E4Q.82/H4Q.82, E4.80/H4.80/R4.80, 15050/15150/R19850, 5050HD/9850HD, E6.80
97.80.01	97.30 / 97.31	E4Q.34/H4Q.34, E4.32/H4.32/R4.32, E4.38L/R4.38L, E6.40/R6.40
98.80.01	98.30 / 98.31	E4.112/R4.112, 1640/R1608
99.80.01	99.30 / 99.31	E4.28/R4.28, E4.31L/R4.31L, E6.35

*Fixed end module available upon request, please consult igus® for delivery time.



Fixed end module - length 2,000mm.

Steel guide trough | One piece

Special solution | For series 10, B15, E2.17 and 15

❶ Guide trough
❷ Glide bar
❸ Fastening screws

Ba = Outer e-chain® width
Bi = Inner e-chain® width
ha = e-chain® outer height
H_{Ri} = Trough inner height
H_{Ra} = Trough outer height
B_{Ri} = Trough inner width
B_{Ra} = Trough outer width

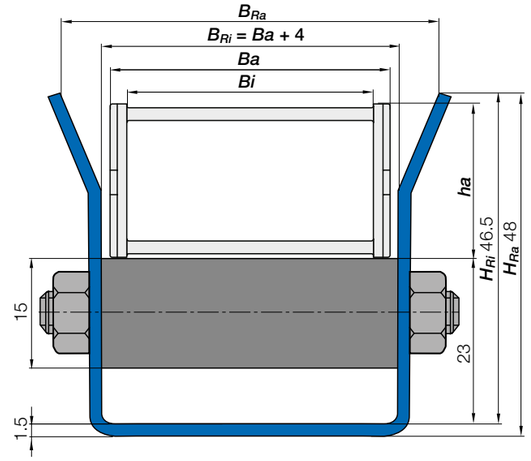

For the following series
E2 mini
● 10
● B15
E2.1 micro
● E2.17
zipper
● 15



- One-piece steel guide troughs for series 10, 15, B15, E2.17 (galvanised steel)
- Continuous glide bar for the gliding section of the trough
- The e-chains® with an outer width up to 100mm are available from stock
- For wider e-chains® special solutions are possible
- Without installation sets, as the guide troughs are made of a single U-profile
- The solution for the trough joint is specific for any application

Product range

Part No. without glide bars	Part No. with glide bars	For e-chains® series	B_{Ra} [mm]	B_{Ri} [mm]	Weight [kg/m]1)	Weight [kg/m]2)
91.10	**91.11**	10.015/15.015/B15.015/E2.17.015	40.5	30	≈ 1.50	≈ 2.10
91.20	**91.21**	10.025/15.025/B15.025/E2.17.025	50.5	40	≈ 1.65	≈ 2.35
91.30	**91.31**	10.038/15.038/B15.038/E2.17.038	62.5	52	≈ 1.80	≈ 2.70
91.40	**91.41**	10.050/15.050/B15.050/E2.17.050	72.5	62	≈ 1.90	≈ 3.15
91.50	**91.51**	10.5/15.5/B15.5/E2.17.063	89.5	79	≈ 2.15	≈ 4.30
91.60	**91.61**	10.6/15.6/B15.6/E2.17.080	106,5	96	≈ 2.40	≈ 4.60
91.70	**91.71**	10.7/15.7/B15.7/E2.17.100	126.5	116	≈ 2.80	≈ 5.20

1) without glide bar 2) with glide bar

Steel guide trough | Heavy-duty | 92.30 | 92.31

Product range | Trough height: 70mm

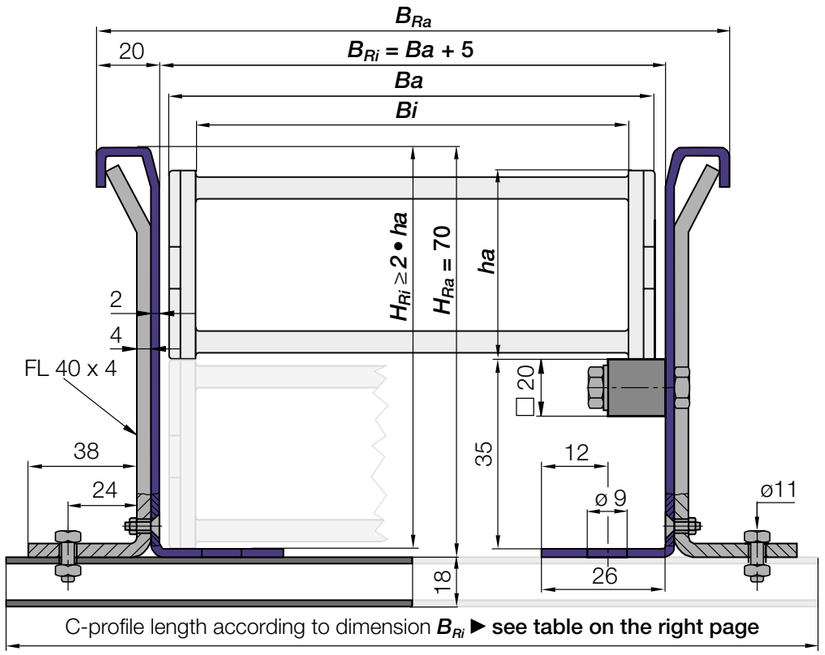

For the following series
E2.1
● E2.26/E2C.26
E2/000
● 2500
● 255
E6
● E6.29/R6.29

Note: The inner width of the guide through and the C-profile length of the installation set can differ according to the bracket you choose. Please call us.

	Full trough side part sets (2m pieces each)	Part No.	Weight
Full sets	1 set of 2 trough side parts, without glide bars, 2m section	**92.30.E**[1] **/ E44**[2] **/ E45**[3]	≈ 7.60kg
	1 set of 2 trough side parts, with glide bars, 2m section, galvanised steel	**92.31.E**[1] **/ E44**[2] **/ E45**[3]	≈ 9.60kg
	Full installation set	**Part No.**	**Weight**
	1 installation set without C-profile	**92.50**	≈ 0.34kg
	1 installation set with C-profile (C-profile length according to dimension B_{Ri})	**92.50.**XXX[A]	upon request
	A) Please add the C-profile length XXX as shown on the tables. Example: **Part No. 92.50.**200		

	Components as individual parts, trough	Part No.	Weight
Individual parts	1 trough side part, 2m section	**92.11.E**[1] **/ E44**[2] **/ E45**[3]	≈ 3.80kg
	1 glide bar, 2m section	**92.01**	≈ 0.75 kg
	1 glide bar, 2m section + 11 screw sets	**92.20**	≈ 0.98kg
	1 package with 11 screw sets (for glide bar, 2m section)	**92.21**	≈ 0.23kg
	Components as individual parts, installation set	**Part No.**	**Weight**
	1 clamping bracket, individual	**92.51**	≈ 0.12kg
	1 countersunk-head screw, individual	**92.53 / M6 x 14**	≈ 0.002kg
	1 hexagon nut, individual	**92.54 / M6**	≈ 0.002kg
	1 hexagon-head screw, individual	**92.55 / M10 x 16**	≈ 0.019kg
	1 glide nut, individual	**92.56 / M10**	≈ 0.015kg
	1 C-profile, individual (C-profile length according to dimension B_{Ri})	**92.52.**XXX**.E**[B]	≈ 0.90kg/m
	B) Please add the C-profile length XXX as shown on the tables. Example: **Part No. 92.52.**200**.E**.		

	Additional options for simple fastening without drilling	Part No.	
Option	1 set fixed end module, 2m section	**92.80.01**	≈ 7.60kg

1) Trough side parts + C-profile - also available in 304 stainless steel, material 1.4301 (AISI 304). Please add index **.E** to the Part No.

2) Trough side parts - also available in 316 stainless steel, material 1.4404 (AISI 316L). Please add index **.E44** to the Part No.

3) Trough side parts - also available in 316 stainless steel, material 1.4571 (AISI 316Ti). Please add index **.E45** to the Part No.

C-profile length (according to dimension B_{Ri})

E2.26/E2C.26			2500			255			E6.29/R6.29		
Width index	B_{Ri} [mm]	Part No. Installation set	Width index	B_{Ri} [mm]	Part No. Installation set	Width index	B_{Ri} [mm]	Part No. Installation set	Width index	B_{Ri} [mm]	Part No. Installation set
.025	**47**	upon request	.02	**46**	upon request	.03	**59**	upon request	.030	**51**	upon request
.038	**60**	upon request	.03	**59**	upon request	.05	**78**	92.50.200	.040	**61**	upon request
.057	**79**	92.50.200	.05	**78**	92.50.200	.07	**98**	92.50.225	.050	**71**	92.50.200
.077	**99**	92.50.225	.07	**98**	92.50.225	.10	**124**	92.50.250	.060	**81**	92.50.200
.089	**111**	92.50.225	.09	**110**	92.50.225				.070	**91**	92.50.200
.103	**125**	92.50.250	.10	**124**	92.50.250				.080	**101**	92.50.225
.125	**147**	92.50.275	.12	**146**	92.50.275				.090	**111**	92.50.225
									.100	**121**	92.50.250
									.110	**131**	92.50.250
									.120	**141**	92.50.250
									.140	**161**	92.50.275

Steel guide trough | Heavy-duty | 95.30 | 95.31

Product range | Trough height: 100mm

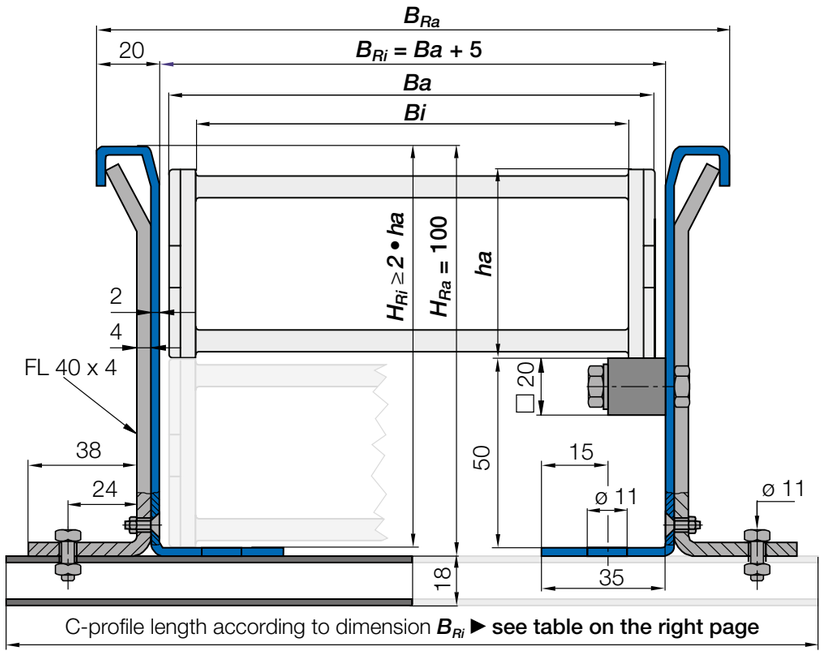

For the following series
E2.1
● E2.38/E2C.38
E2/000
● 2700
E2 R
● R58

Note: The inner width of the guide through and the C-profile length of the installation set can differ according to the bracket you choose. Please call us.

	Full trough side part sets (2m pieces each)	Part No.	Weight
Full sets	1 set of 2 trough side parts, without glide bars, 2m section	**95.30.E**[1] **/ E44**[2] **/ E45**[3]	≈ 10.00kg
	1 set of 2 trough side parts, with glide bars, 2m section, galvanised steel	**95.31.E**[1] **/ E44**[2] **/ E45**[3]	≈ 12.00kg
	Full installation set	**Part No.**	**Weight**
	1 installation set without C-profile	**95.50**	≈ 0.41kg
	1 installation set with C-profile (C-profile length according to dimension B_{Ri})	**95.50.**XXX[A]	upon request
	A) Please add the C-profile length XXX as shown on the tables. Example: **Part No. 95.50.**200		

	Components as individual parts, trough	Part No.	Weight
Individual parts	1 trough side part, 2m section	**95.11.E**[1] **/ E44**[2] **/ E45**[3]	≈ 5.00kg
	1 glide bar, 2m section	**92.01**	≈ 0.75 kg
	1 glide bar, 2m section + 11 screw sets	**92.20**	≈ 0.98kg
	1 package with 11 screw sets (for glide bar, 2m section)	**92.21**	≈ 0.23kg
	Components as individual parts, installation set	**Part No.**	**Weight**
	1 clamping bracket, individual	**95.51**	≈ 0.16kg
	1 countersunk-head screw, individual	**92.53 / M6 x 14**	≈ 0.002kg
	1 hexagon nut, individual	**92.54 / M6**	≈ 0.002kg
	1 hexagon-head screw, individual	**92.55 / M10 x 16**	≈ 0.019kg
	1 glide nut, individual	**92.56 / M10**	≈ 0.015kg
	1 C-profile, individual (C-profile length according to dimension B_{Ri})	**92.52.**XXX**.E**[B]	≈ 0.90kg/m
	B) Please add the C-profile length XXX as shown on the tables. Example: **Part No. 92.52.**200**.E**.		

	Additional options for simple fastening without drilling	Part No.	
Option	1 set fixed end module, 2m section	**95.80.01**	≈ 10.00kg

1) Trough side parts + C-profile - also available in 304 stainless steel, material 1.4301 (AISI 304). Please add index **.E** to the Part No.

2) Trough side parts - also available in 316 stainless steel, material 1.4404 (AISI 316L). Please add index **.E44** to the Part No.

3) Trough side parts - also available in 316 stainless steel, material 1.4571 (AISI 316Ti). Please add index **.E45** to the Part No.

C-profile length (according to dimension B_{Ri})

E2.38/E2C.38			2700			R58		
Width index	B_{Ri} [mm]	Part No. Installation set	Width index	B_{Ri} [mm]	Part No. Installation set	Width index	B_{Ri} [mm]	Part No. Installation set
.050	**72**	95.50.200	.05	**71**	95.50.200	.050	**71**	95.50.200
.065	**87**	95.50.200	.06	**86**	95.50.200	.075	**96**	95.50.225
.075	**97**	95.50.225	.07	**96**	95.50.225	.100	**121**	95.50.250
.090	**112**	95.50.225	.09	**111**	95.50.225	.125	**146**	95.50.275
.100	**122**	95.50.250	.10	**121**	95.50.250	.150	**171**	95.50.300
.125	**147**	95.50.275	.12	**146**	95.50.275	.175	**196**	95.50.325
.150	**172**	95.50.300	.15	**171**	95.50.300	.200	**221**	95.50.350
.175	**200**	95.50.325	.17	**199**	95.50.325			

Steel guide trough | Heavy-duty | 99.30 | 99.31

Product range | Trough height: 100mm

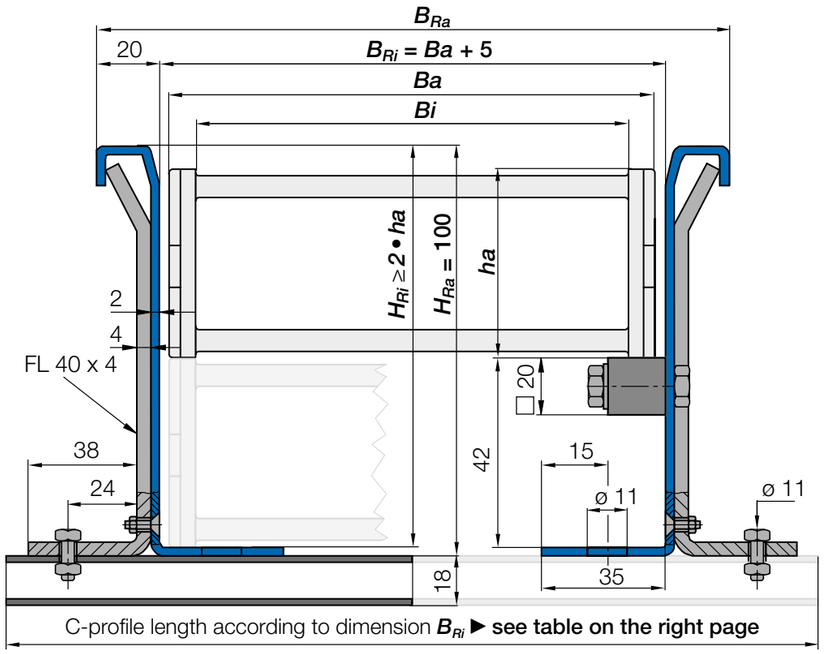

For the following series
E4.1
● E4.28/R4.28
E4.1L
● E4.31L/R4.31L
E6
● E6.35

Note: The inner width of the guide through and the C-profile length of the installation set can differ according to the bracket you choose. Please call us.

	Full trough side part sets (2m pieces each)	Part No.	Weight
Full sets	1 set of 2 trough side parts, without glide bars, 2m section	**99.30.E[1] / E44[2] / E45[3]**	≈ 10.00kg
	1 set of 2 trough side parts, with glide bars, 2m section, galvanised steel	**99.31.E[1] / E44[2] / E45[3]**	≈ 12.00kg
	Full installation set	**Part No.**	**Weight**
	1 installation set without C-profile	**95.50**	≈ 0.41kg
	1 installation set with C-profile (C-profile length according to dimension B_{Ri})	**95.50.XXX[A]**	upon request
	A) Please add the C-profile length XXX as shown on the tables. Example: **Part No. 95.50.200**		

	Components as individual parts, trough	Part No.	Weight
Individual parts	1 trough side part, 2m section	**99.11.E[1] / E44[2] / E45[3]**	≈ 5.00kg
	1 glide bar, 2m section	**92.01**	≈ 0.75 kg
	1 glide bar, 2m section + 11 screw sets	**92.20**	≈ 0.98kg
	1 package with 11 screw sets (for glide bar, 2m section)	**92.21**	≈ 0.23kg
	Components as individual parts, installation set	**Part No.**	**Weight**
	1 clamping bracket, individual	**95.51**	≈ 0.16kg
	1 countersunk-head screw, individual	**92.53 / M6 x 14**	≈ 0.002kg
	1 hexagon nut, individual	**92.54 / M6**	≈ 0.002kg
	1 hexagon-head screw, individual	**92.55 / M10 x 16**	≈ 0.019kg
	1 glide nut, individual	**92.56 / M10**	≈ 0.015kg
	1 C-profile, individual (C-profile length according to dimension B_{Ri})	**92.52.XXX.E[B]**	≈ 0.90kg/m
	B) Please add the C-profile length XXX as shown on the tables. Example: **Part No. 92.52.200.E**.		

	Additional options for simple fastening without drilling	Part No.	
Option	1 set fixed end module, 2m section	**99.80.01**	≈ 10.00kg

1) Trough side parts + C-profile - also available in 304 stainless steel, material 1.4301 (AISI 304). Please add index **.E** to the Part No.

2) Trough side parts - also available in 316 stainless steel, material 1.4404 (AISI 316L). Please add index **.E44** to the Part No.

3) Trough side parts - also available in 316 stainless steel, material 1.4571 (AISI 316Ti). Please add index **.E45** to the Part No.

C-profile length (according to dimension B_{Ri})

99.30
99.31

E4.28/R4.28		
Width index	B_{Ri} [mm]	Part No. Installation set
.040	**65**	upon request
.050	**75**	95.50.**200**
.052	**77**	95.50.**200**
.062	**87**	95.50.**200**
.070	**95**	95.50.**200**
.075	**100**	95.50.**225**
.087	**112**	95.50.**225**
.100	**125**	95.50.**250**
.125	**150**	95.50.**275**
.150	**175**	95.50.**300**
.175	**200**	95.50.**325**
.200	**225**	95.50.**350**
.225	**250**	95.50.**375**
.250	**275**	95.50.**400**
.275	**300**	95.50.**425**
.300	**325**	95.50.**450**

E4.31L/R4.31L		
Width index	B_{Ri} [mm]	Part No. Installation set
.040	**59**	upon request
.050	**69**	upon request
.062	**81**	95.50.**200**
.075	**94**	95.50.**200**
.087	**106**	95.50.**225**
.100	**119**	95.50.**225**
.112	**131**	95.50.**250**
.125	**144**	95.50.**250**
.137*	**156**	95.50.**275**
.150	**169**	95.50.**275**
.162	**181**	95.50.**300**
.175	**194**	95.50.**300**
.187*	**206**	95.50.**325**
.200*	**219**	95.50.**325**

* Available upon request.

E6.35		
Width index	B_{Ri} [mm]	Part No. Installation set
.030	**55**	upon request
.040	**65**	upon request
.050	**75**	95.50.**200**
.060	**85**	95.50.**200**
.070	**95**	95.50.**200**
.080	**105**	95.50.**225**
.090	**115**	95.50.**225**
.100	**125**	95.50.**250**
.110	**135**	95.50.**250**
.120	**145**	95.50.**250**
.140	**165**	95.50.**275**

Steel guide trough | Heavy-duty | 97.30 | 97.31

Product range | Trough height: 130mm

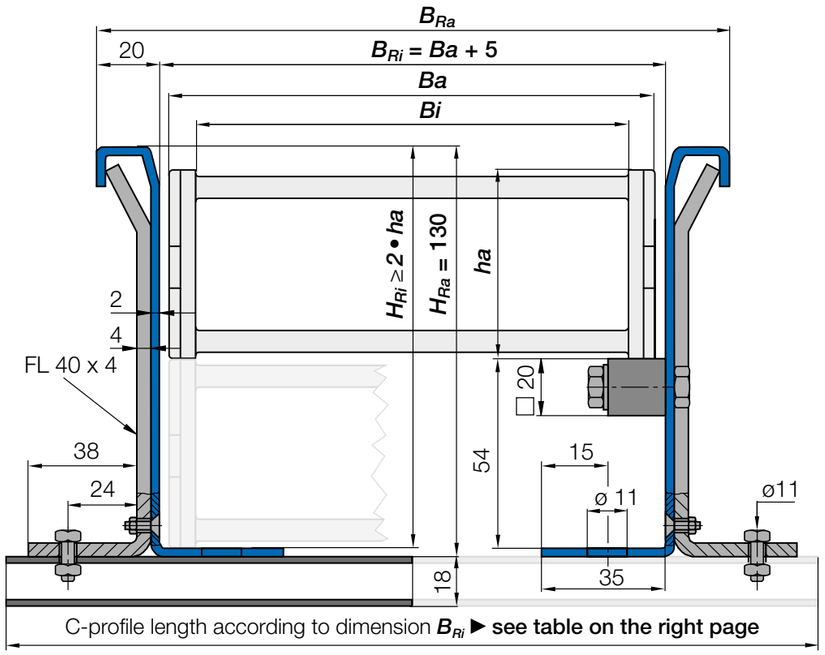

For the following series
E4Q
● E4Q.34/H4Q.34
E4.1
● E4.32/H4.32/R4.32
E4.1L
● E4.38L/R4.38L
E6
● E6.40/R6.40

Note: The inner width of the guide through and the C-profile length of the installation set can differ according to the bracket you choose. Please call us.

	Full trough side part sets (2m pieces each)	Part No.	Weight
Full sets	1 set of 2 trough side parts, without glide bars, 2m section	**97.30.E[1] / E44[2] / E45[3]**	≈ 11.80kg
	1 set of 2 trough side parts, with glide bars, 2m section, galvanised steel	**97.31.E[1] / E44[2] / E45[3]**	≈ 13.60kg
	Full installation set	**Part No.**	**Weight**
	1 installation set without C-profile	**93.50**	≈ 0.49kg
	1 installation set with C-profile (C-profile length according to dimension B_{Ri})	**93.50.XXX[A]**	upon request
	A) Please add the C-profile length XXX as shown on the tables. Example: **Part No. 93.50.350**		

	Components as individual parts, trough	Part No.	Weight
Individual parts	1 trough side part, 2m section	**97.11.E[1] / E44[2] / E45[3]**	≈ 5.90kg
	1 glide bar, 2m section	**92.01**	≈ 0.75 kg
	1 glide bar, 2m section + 11 screw sets	**92.20**	≈ 0.98kg
	1 package with 11 screw sets (for glide bar, 2m section)	**92.21**	≈ 0.23kg
	Components as individual parts, installation set	**Part No.**	**Weight**
	1 clamping bracket, individual	**93.51**	≈ 0.20kg
	1 countersunk-head screw, individual	**92.53 / M6 x 14**	≈ 0.002kg
	1 hexagon nut, individual	**92.54 / M6**	≈ 0.002kg
	1 hexagon-head screw, individual	**92.55 / M10 x 16**	≈ 0.019kg
	1 glide nut, individual	**92.56 / M10**	≈ 0.015kg
	1 C-profile, individual (C-profile length according to dimension B_{Ri})	**92.52.XXX.E[B]**	≈ 0.90kg/m
	B) Please add the C-profile length XXX as shown on the tables. Example: **Part No. 92.52.350.E**.		

	Additional options for simple fastening without drilling	Part No.	
Option	1 set fixed end module, 2m section	**97.80.01**	≈ 11.80kg

1) Trough side parts + C-profile - also available in 304 stainless steel, material 1.4301 (AISI 304). Please add index **.E** to the Part No.

2) Trough side parts - also available in 316 stainless steel, material 1.4404 (AISI 316L). Please add index **.E44** to the Part No.

3) Trough side parts - also available in 316 stainless steel, material 1.4571 (AISI 316Ti). Please add index **.E45** to the Part No.

C-profile length (according to dimension B_{Ri})

E4Q.34/H4Q.34		
Width index	B_{Ri} [mm]	Part No. Installation set
.075	**103**	93.50.225
.087	**115**	93.50.225
.100	**128**	93.50.250
.108	**136**	93.50.250
.112	**141**	93.50.250
.125	**153**	93.50.275
.137	**166**	93.50.275
.150	**178**	93.50.300
.162	**191**	93.50.300
.168	**196**	93.50.325
.175	**203**	93.50.325
.187	**216**	93.50.325
.200	**228**	93.50.350
.212	**241**	93.50.350
.225	**253**	93.50.375
.237	**266**	93.50.375
.250	**278**	93.50.400
.262	**291**	93.50.400
.275	**303**	93.50.425
.287	**316**	93.50.425
.300	**328**	93.50.450
.312*	**341**	93.50.450
.325*	**353**	93.50.475
.337*	**366**	93.50.475
.350	**378**	93.50.500
.362*	**391**	93.50.500
.375	**403**	93.50.525
.387	**416**	93.50.525
.400	**428**	93.50.550

* Available upon request.

E4.32/H4.32/R4.32		
Width index	B_{Ri} [mm]	Part No. Installation set
.05	**78**	93.50.200
.06	**96**	93.50.225
.07	**103**	93.50.225
.087	**115**	93.50.225
.09	**125**	93.50.250
.10	**128**	93.50.250
.11	**136**	93.50.250
.112	**141**	93.50.250
.12	**153**	93.50.275
.137	**166**	93.50.275
.15	**178**	93.50.300
.162	**191**	93.50.300
.17	**196**	93.50.325
.18	**203**	93.50.325
.187	**216**	93.50.325
.20	**228**	93.50.350
.212	**241**	93.50.350
.23	**253**	93.50.375
.237	**266**	93.50.375
.25	**278**	93.50.400
.262	**291**	93.50.400
.28	**303**	93.50.425
.29	**316**	93.50.425
.30	**328**	93.50.450
.312	**341**	93.50.450
.325	**353**	93.50.475
.337	**366**	93.50.475
.350	**378**	93.50.500
.362	**391**	93.50.500
.375	**403**	93.50.525
.387	**416**	93.50.525
.400	**428**	93.50.550

E4.38L/R4.38L		
Width index	B_{Ri} [mm]	Part No. Installation set
.050	**71**	93.50.200
.062	**83**	93.50.200
.075	**96**	93.50.225
.087	**108**	93.50.225
.100	**121**	93.50.250
.105	**126**	93.50.250
.112	**133**	93.50.250
.125	**146**	93.50.275
.137	**158**	93.50.275
.150	**171**	93.50.300
.162	**183**	93.50.300
.175	**196**	93.50.325
.187	**208**	93.50.325
.200	**221**	93.50.350
.212	**233**	93.50.350
.225	**246**	93.50.375
.237	**258**	93.50.375
.250	**271**	93.50.400
.262	**283**	93.50.400
.275*	**296**	93.50.425
.287*	**308**	93.50.425
.300	**321**	93.50.450

* Available upon request.

E6.40/R6.40		
Width index	B_{Ri} [mm]	Part No. Installation set
.040	**65**	upon request
.050	**75**	93.50.200
.052	**77**	93.50.200
.062	**87**	93.50.200
.070	**95**	93.50.225
.075	**100**	93.50.225
.087	**112**	93.50.225
.100	**125**	93.50.250
.125	**150**	93.50.275
.150	**175**	93.50.300
.175	**200**	93.50.325
.200	**225**	93.50.350
.225	**250**	93.50.375
.250	**275**	93.50.400
.275	**300**	93.50.425
.300	**325**	93.50.450

Steel guide trough | Heavy-duty | 93.30 | 93.31

Product range | Trough height: 130mm

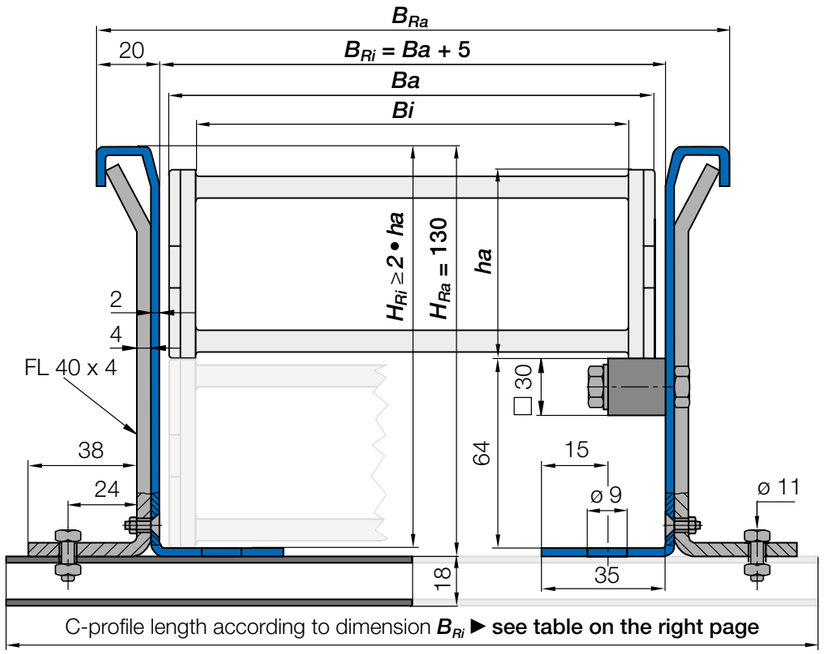

For the following series
E2.1
● E2.48
E2/000
● 3500
E2 R
● R68
E4Q
● E4Q.44/H4Q.44
E4.1
● E4.42/H4.42/R4.42
E4.1L
● E4.48L/R4.48L
E6
● E6.52/R6.52

Note: The inner width of the guide through and the C-profile length of the installation set can differ according to the bracket you choose. Please call us.

	Full trough side part sets (2m pieces each)	Part No.	Weight
Full sets	1 set of 2 trough side parts, without glide bars, 2m section	**93.30.E**[1] **/ E44**[2] **/ E45**[3]	≈ 11.80kg
	1 set of 2 trough side parts, with glide bars, 2m section, galvanised steel	**93.31.E**[1] **/ E44**[2] **/ E45**[3]	≈ 16.20kg
	Full installation set	**Part No.**	**Weight**
	1 installation set without C-profile	**93.50**	≈ 0.49kg
	1 installation set with C-profile (C-profile length according to dimension B_{Ri})	**93.50.XXX**[A]	upon request
	A) Please add the C-profile length XXX as shown on the tables. Example: **Part No. 93.50.350**		

	Components as individual parts, trough	Part No.	Weight
Individual parts	1 trough side part, 2m section	**93.11.E**[1] **/ E44**[2] **/ E45**[3]	≈ 5.90kg
	1 glide bar, 2m section	**93.01**	≈ 1.68kg
	1 glide bar, 2m section + 11 screw sets	**93.20**	≈ 2.22kg
	1 package with 11 screw sets (for glide bar, 2m section)	**93.21**	≈ 0.54kg
	Components as individual parts, installation set	**Part No.**	**Weight**
	1 clamping bracket, individual	**93.51**	≈ 0.20kg
	1 countersunk-head screw, individual	**92.53 / M6 x 14**	≈ 0.002kg
	1 hexagon nut, individual	**92.54 / M6**	≈ 0.002kg
	1 hexagon-head screw, individual	**92.55 / M10 x 16**	≈ 0.019kg
	1 glide nut, individual	**92.56 / M10**	≈ 0.015kg
	1 C-profile, individual (C-profile length according to dimension B_{Ri})	**92.52.XXX.E**[B]	≈ 0.90kg/m
	B) Please add the C-profile length XXX as shown on the tables. Example: **Part No. 92.52.350.E**.		

	Additional options for simple fastening without drilling	Part No.	
Option	1 set fixed end module, 2m section	**93.80.01**	≈ 11.80kg

1) Trough side parts + C-profile - also available in 304 stainless steel, material 1.4301 (AISI 304). Please add index **.E** to the Part No.

2) Trough side parts - also available in 316 stainless steel, material 1.4404 (AISI 316L). Please add index **.E44** to the Part No.

3) Trough side parts - also available in 316 stainless steel, material 1.4571 (AISI 316Ti). Please add index **.E45** to the Part No.

C-profile length (according to dimension B_{Ri})

E2.48

Width index	B_{Ri} [mm]	Part No. Installation set
.050	**77**	93.50.200
.075	**102**	93.50.225
.100	**127**	93.50.250
.115	**142**	93.50.250
.125	**152**	93.50.275
.150	**177**	93.50.300
.175	**202**	93.50.325
.200	**227**	93.50.350
.225	**252**	93.50.375
.250	**277**	93.50.400

3500

Width index	B_{Ri} [mm]	Part No. Installation set
.050	**77**	93.50.200
.075	**102**	93.50.225
.100	**127**	93.50.250
.115	**142**	93.50.250
.125	**152**	93.50.275
.150	**177**	93.50.300
.175	**202**	93.50.325
.200	**227**	93.50.350
.225	**252**	93.50.375
.250	**277**	93.50.400

R68

Width index	B_{Ri} [mm]	Part No. Installation set
.050	**73**	93.50.200
.075	**98**	93.50.225
.100	**123**	93.50.250
.115	**138**	93.50.250
.125	**148**	93.50.275
.150	**173**	93.50.300
.175	**198**	93.50.325
.200	**223**	93.50.350
.225	**248**	93.50.375
.250	**273**	93.50.400

E4Q.44/H4Q.44

Width index	B_{Ri} [mm]	Part No. Installation set
.075	**106**	93.50.225
.087	**119**	93.50.250
.100	**131**	93.50.250
.108	**139**	93.50.250
.112	**144**	93.50.275
.125	**156**	93.50.275
.137	**169**	93.50.300
.150	**181**	93.50.300
.162	**194**	93.50.325
.168	**199**	93.50.325
.175	**206**	93.50.325
.187	**219**	93.50.350
.200	**231**	93.50.350
.212	**244**	93.50.375
.225	**256**	93.50.375
.237	**269**	93.50.400
.250	**281**	93.50.400
.262	**294**	93.50.425
.275	**306**	93.50.425
.287	**319**	93.50.450
.300	**331**	93.50.450
.312*	**344**	93.50.475
.325*	**356**	93.50.475
.337*	**369**	93.50.500
.350	**381**	93.50.500
.362*	**394**	93.50.525
.375	**407**	93.50.525
.387	**419**	93.50.550
.400	**431**	93.50.550

* Available upon request.

E4.42/H4.42/R4.42

Width index	B_{Ri} [mm]	Part No. Installation set
.05	**81**	93.50.200
.06	**99**	93.50.225
.07	**106**	93.50.225
.087	**119**	93.50.250
.097	**128**	93.50.250
.10	**131**	93.50.250
.11	**139**	93.50.250
.112	**144**	93.50.275
.12	**156**	93.50.275
.137	**169**	93.50.300
.15	**181**	93.50.300
.162	**194**	93.50.325
.17	**199**	93.50.325
.18	**206**	93.50.325
.187	**219**	93.50.350
.20	**231**	93.50.350
.212	**244**	93.50.375
.23	**256**	93.50.375
.237	**269**	93.50.400
.25	**281**	93.50.400
.262	**294**	93.50.425
.28	**306**	93.50.425
.29	**319**	93.50.450
.30	**331**	93.50.450
.312	**344**	93.50.475
.325	**356**	93.50.475
.337	**369**	93.50.500
.350	**381**	93.50.500
.362	**394**	93.50.525
.375	**407**	93.50.525
.387	**419**	93.50.550
.400	**431**	93.50.550

E4.48L/R4.48L

Width index	B_{Ri} [mm]	Part No. Installation set
.050	**75**	93.50.200
.062	**87**	93.50.200
.075	**100**	93.50.225
.087	**112**	93.50.225
.100	**125**	93.50.250
.105	**130**	93.50.250
.112	**137**	93.50.250
.125	**150**	93.50.275
.137	**162**	93.50.275
.150	**175**	93.50.300
.162	**187**	93.50.300
.175	**200**	93.50.325
.187	**212**	93.50.325
.200	**225**	93.50.350
.212	**237**	93.50.350
.225	**250**	93.50.375
.237	**262**	93.50.375
.250	**275**	93.50.400
.262	**287**	93.50.400
.275*	**300**	93.50.425
.287*	**312**	93.50.425
.300	**325**	93.50.450

E6.52/R6.52

Width index	B_{Ri} [mm]	Part No. Installation set
.040	**69**	93.50.200
.050	**79**	93.50.200
.052	**81**	93.50.200
.062	**91**	93.50.200
.070	**99**	93.50.225
.075	**104**	93.50.225
.087	**116**	93.50.225
.100	**129**	93.50.250
.125	**154**	93.50.275
.150	**179**	93.50.300
.175	**204**	93.50.325
.200	**229**	93.50.350
.225	**254**	93.50.375
.250	**279**	93.50.400
.275	**304**	93.50.425
.300	**329**	93.50.450

* Available upon request.

Steel guide trough | Heavy-duty | 94.30 | 94.31

Product range | Trough height: 170mm

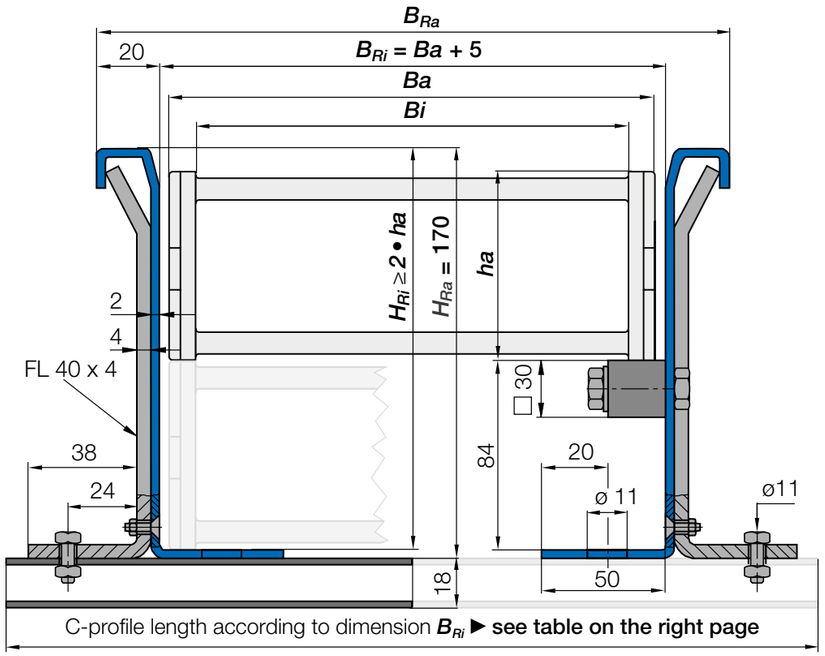

C-profile length according to dimension B_{Ri} ▶ see table on the right page

For the following series
E4Q
● E4Q.58/H4Q.58
E4.1
● E4.56/H4.56/R4.56
E4.1L
● E4.64L
E4/light
● 14040/14140/R18840
● 14240/14340
E6
● E6.62
E4/4HD
● 4040HD/8840HD

Option: with reinforced mounting angles for extremely heavy-duty applications. For particularly demanding applications.

Note: The inner width of the guide through and the C-profile length of the installation set can differ according to the bracket you choose. Please call us.

	Full trough side part sets (2m pieces each)	Part No.	Weight
Full sets	1 set of 2 trough side parts, without glide bars, 2m section	**94.30.E**[1] **/ E44**[2] **/ E45**[3]	≈ 14.70kg
	1 set of 2 trough side parts, with glide bars, 2m section, galvanised steel	**94.31.E**[1] **/ E44**[2] **/ E45**[3]	≈19.00kg
	Full installation set	**Part No.**	**Weight**
	1 installation set without C-profile	**94.50**	≈ 0.58kg
	1 installation set with C-profile (C-profile length according to dimension B_{Ri})	**94.50.**XXX[A]	upon request
	A) Please add the C-profile length XXX as shown on the tables. Example: **Part No. 94.50.350**		
Individual parts	**Components as individual parts, trough**	**Part No.**	**Weight**
	1 trough side part, 2m section	**94.11.E**[1] **/ E44**[2] **/ E45**[3]	≈ 7.35kg
	1 glide bar, 2m section	**93.01**	≈ 1.68kg
	1 glide bar, 2m section + 11 screw sets	**93.20**	≈ 2.22kg
	1 package with 11 screw sets (for glide bar, 2m section)	**93.21**	≈ 0.54kg
	Components as individual parts, installation set	**Part No.**	**Weight**
	1 clamping bracket, individual	**94.51**	≈ 0.25kg
	1 countersunk-head screw, individual	**92.53 / M6 x 14**	≈ 0.002kg
	1 hexagon nut, individual	**92.54 / M6**	≈ 0.002kg
	1 hexagon-head screw, individual	**92.55 / M10 x 16**	≈ 0.019kg
	1 glide nut, individual	**92.56 / M10**	≈ 0.015kg
	1 C-profile, individual (C-profile length according to dimension B_{Ri})	**92.52.**XXX**.E**[B]	≈ 0.90kg/m
	B) Please add the C-profile length XXX as shown on the tables. Example: **Part No. 92.52.350.E**.		
Option	**Additional options for simple fastening without drilling**	**Part No.**	
	1 set fixed end module, 2m section	**94.80.01**	≈ 14.70kg

1) Trough side parts + C-profile - also available in 304 stainless steel, material 1.4301 (AISI 304). Please add index **.E** to the Part No.

2) Trough side parts - also available in 316 stainless steel, material 1.4404 (AISI 316L). Please add index **.E44** to the Part No.

3) Trough side parts - also available in 316 stainless steel, material 1.4571 (AISI 316Ti). Please add index **.E45** to the Part No.

C-profile length (according to dimension B_{Ri})

E4Q.58/H4Q.58			E4.56/H4.56/R4.56			E4.64L			14040/14140/R18840			14240/14340			E6.62			4040HD/8840HD		
Width index	B_{Ri} [mm]	Part No. Installation set	Width index	B_{Ri} [mm]	Part No. Installation set	Width index	B_{Ri} [mm]	Part No. Installation set	Width index	B_{Ri} [mm]	Part No. Installation set	Width index	B_{Ri} [mm]	Part No. Installation set	Width index	B_{Ri} [mm]	Part No. Installation set	Width index	B_{Ri} [mm]	Part No. Installation set
.100	**139**	94.50.250	.05	**89**	upon request	.075	**106**	94.50.225	.05	**81**	upon request	.05	**81**	upon request	.05	**91**	upon request	.05	**109**	94.50.225
.112	**152**	94.50.275	.055	**94**	upon request	.087	**118**	94.50.250	.055	**86**	upon request	.06	**99**	upon request	.06	**109**	94.50.225	.06	**124**	94.50.250
.125	**164**	94.50.275	.06	**104**	94.50.225	.100	**128**	94.50.250	.06	**96**	upon request	.07	**106**	94.50. 225	.07	**116**	94.50.225	.07	**134**	94.50.250
.137	**177**	94.50.300	.07	**114**	94.50.225	.112	**143**	94.50.275	.07	**106**	94.50.225	.087	**119**	94.50.250	.087	**128**	94.50.250	.08	**146**	94.50.275
.150	**189**	94.50.300	.08	**121**	94.50.225	.125	**156**	94.50.275	.08	**118**	94.50.250	.097	**128**	94.50.250	.097	**138**	94.50.250	.10	**159**	94.50.275
.162	**202**	94.50.325	.10	**139**	94.50.250	.137	**168**	94.50.300	.10	**131**	94.50.250	.10	**131**	94.50.250	.10	**141**	94.50.250	.11	**171**	94.50.300
.175	**214**	94.50.325	.11	**152**	94.50.275	.150	**181**	94.50.300	.11	**144**	94.50.275	.11	**139**	94.50.250	.11	**149**	94.50.275	.12	**184**	94.50.300
.187	**227**	94.50.350	.12	**164**	94.50.275	.175	**206**	94.50.325	.12	**156**	94.50.275	.112	**144**	94.50.275	.112	**153**	94.50.275	.13	**196**	94.50.325
.200	**239**	94.50.350	.13	**177**	94.50.300	.187	**218**	94.50.350	.13	**169**	94.50.300	.12	**156**	94.50.275	.12	**166**	94.50.275	.15	**209**	94.50.325
.212	**252**	94.50.375	.15	**189**	94.50.300	.200	**231**	94.50.350	.15	**181**	94.50.300	.137	**169**	94.50.300	.137	**178**	94.50.300	.16	**221**	94.50.350
.225	**264**	94.50.375	.16	**202**	94.50.325	.212	**243**	94.50.375	.16	**194**	94.50.325	.15	**181**	94.50.300	.15	**191**	94.50.300	.17	**234**	94.50.350
.237	**277**	94.50.400	.169	**209**	94.50.325	.225	**256**	94.50.375	.169	**201**	94.50.325	.162	**194**	94.50.325	.162	**203**	94.50.325	.18	**246**	94.50.375
.250	**289**	94.50.400	.17	**214**	94.50.325	.250	**281**	94.50.400	.17	**206**	94.50.325	.17	**199**	94.50.325	.17	**209**	94.50.325	.20	**259**	94.50.375
.262	**302**	94.50.425	.182	**222**	94.50.350	.300	**331**	94.50.450	.182	**214**	94.50.325	.18	**206**	94.50.325	.18	**216**	94.50.325	.21	**271**	94.50.400
.275	**314**	94.50.425	.18	**227**	94.50.350	.325	**356**	94.50.475	.18	**219**	94.50.350	.187	**219**	94.50.350	.187	**228**	94.50.350	.22	**284**	94.50.400
.287	**327**	94.50.450	.20	**239**	94.50.350	.350	**381**	94.50.500	.20	**231**	94.50.350	.20	**231**	94.50.350	.20	**241**	94.50.350	.23	**296**	94.50.425
.300	**339**	94.50.450	.207	**247**	94.50.375				.207	**239**	94.50.350	.212	**244**	94.50.375	.212	**253**	94.50.375	.25	**309**	94.50.425
.312	**352**	94.50.475	.21	**252**	94.50.375				.21	**244**	94.50.375	.23	**256**	94.50.375	.23	**266**	94.50.375	.26	**321**	94.50.450
.325	**364**	94.50.475	.22	**264**	94.50.375				.22	**256**	94.50.375	.237	**269**	94.50.400	.237	**278**	94.50.400	.27	**334**	94.50.450
.337	**377**	94.50.500	.23	**277**	94.50.400				.23	**269**	94.50.400	.25	**281**	94.50.400	.25	**291**	94.50.400	.28	**346**	94.50.475
.350	**389**	94.50.500	.25	**289**	94.50.400				.25	**281**	94.50.400	.262	**294**	94.50.425	.262	**303**	94.50.425	.30	**359**	94.50.475
.362	**402**	94.50.525	.26	**302**	94.50.425				.26	**294**	94.50.425	.28	**306**	94.50.425	.28	**316**	94.50.425	.31	**371**	94.50.500
.375	**414**	94.50.525	.27	**314**	94.50.425				.27	**306**	94.50.425	.29	**319**	94.50.450	.29	**328**	94.50.450	.32	**384**	94.50.500
.387	**427**	94.50.550	.28	**327**	94.50.450				.28	**319**	94.50.450	.30	**331**	94.50.450	.30	**341**	94.50.450	.33	**396**	94.50.525
.400	**439**	94.50.550	.30	**339**	94.50.450				.30	**331**	94.50.450	.312	**344**	94.50.475	.312	**353**	94.50.475	.35	**409**	94.50.525
.412	**452**	94.50.575	.31	**352**	94.50.475				.31	**344**	94.50.475	.325	**356**	94.50.475	.325	**366**	94.50.475	.36	**421**	94.50.550
.425	**464**	94.50.575	.32	**364**	94.50.475				.32	**356**	94.50.475	.337	**369**	94.50.500	.337	**378**	94.50.500	.37	**434**	94.50.550
.437*	**477**	94.50.600	.33	**377**	94.50.500				.33	**369**	94.50.500	.350	**381**	94.50.500	.350	**391**	94.50.500	.38	**446**	94.50.575
.450	**489**	94.50.600	.35	**389**	94.50.500				.35	**381**	94.50.500	.362	**394**	94.50.525	.362	**403**	94.50.525	.40	**459**	94.50.575
.462*	**502**	94.50.625	.36	**402**	94.50.525				.36	**394**	94.50.525	.375	**406**	94.50.525	.375	**416**	94.50.525	.41	**471**	94.50.600
.475*	**514**	94.50.625	.37	**414**	94.50.525				.37	**406**	94.50.525	.384	**419**	94.50.550	.387	**428**	94.50.550	.42	**484**	94.50.600
.487*	**527**	94.50.650	.38	**427**	94.50.550				.38	**419**	94.50.550	.400	**431**	94.50.550	.400	**441**	94.50.550	.43	**496**	94.50.625
.500	**539**	94.50.650	.40	**439**	94.50.550				.40	**431**	94.50.550							.45	**509**	94.50.625
.512*	**552**	94.50.675	.41	**452**	94.50.575				.41	**444**	94.50.575							.46	**521**	94.50.650
.525*	**564**	94.50.675	.42	**464**	94.50.575				.42	**456**	94.50.575							.47	**534**	94.50.650
.537*	**577**	94.50.700	.43	**477**	94.50.600				.43	**469**	94.50.600							.48	**546**	94.50.675
.550*	**589**	94.50.700	.45	**489**	94.50.600				.45	**481**	94.50.600							.50	**559**	94.50.675
.562*	**601**	94.50.725	.46	**502**	94.50.625				.46	**494**	94.50.625									
			.47	**514**	94.50.625				.47	**506**	94.50.625									
			.48	**527**	94.50.650				.48	**519**	94.50.650									
			.50	**539**	94.50.650				.50	**531**	94.50.650									
			.51	**552**	94.50.675				.51	**544**	94.50.675									
			.52	**564**	94.50.675				.52	**556**	94.50.675									
			.53	**577**	94.50.700				.53	**569**	94.50.700									
			.55	**589**	94.50.700				.55	**581**	94.50.700									
			.60	**639**	94.50.750				.60	**631**	94.50.750									

* Available upon request.

Steel guide trough | Heavy-duty | 96.30 | 96.31

Product range | Trough height: 220mm

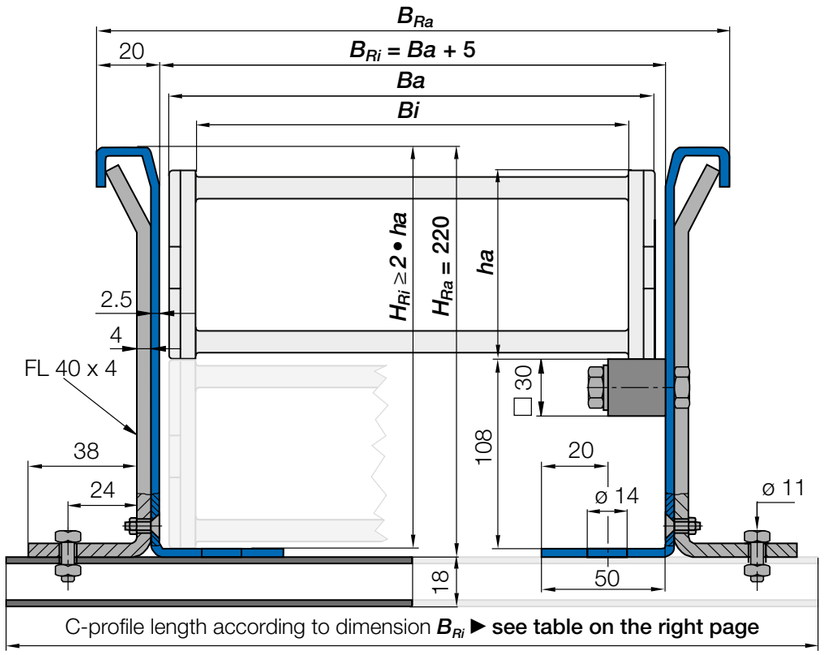

C-profile length according to dimension B_{Ri} ▶ see table on the right page

For the following series
E4Q
● E4Q.82/H4Q.82
E4.1
● E4.80/H4.80/R4.80
E4/light
● 15050/15150/R19850
● 15250/15350
E6
● E6.80
E4/4HD
● 5050HD/9850HD

Option: with reinforced mounting angles for extremely heavy-duty applications. For particularly demanding applications.

Note: The inner width of the guide through and the C-profile length of the installation set can differ according to the bracket you choose. Please call us.

	Full trough side part sets (2m pieces each)	Part No.	Weight
Full sets	1 set of 2 trough side parts, without glide bars, 2m section	**96.30.E**[1] **/ E44**[2] **/ E45**[3]	≈ 22.80kg
	1 set of 2 trough side parts, with glide bars, 2m section, galvanised steel	**96.31.E**[1] **/ E44**[2] **/ E45**[3]	≈ 27.20kg
	Full installation set	**Part No.**	**Weight**
	1 installation set without C-profile	**96.50**	≈ 0.72kg
	1 installation set with C-profile (C-profile length according to dimension B_{Ri})	**96.50.XXX**[A]	upon request
	A) Please add the C-profile length XXX as shown on the tables. Example: **Part No. 96.50.375**		

	Components as individual parts, trough	Part No.	Weight
Individual parts	1 trough side part, 2m section	**96.11.E**[1] **/ E44**[2] **/ E45**[3]	≈ 11.40kg
	1 glide bar, 2m section	**93.01**	≈ 1.68kg
	1 glide bar, 2m section + 11 screw sets	**93.20**	≈ 2.22kg
	1 package with 11 screw sets (for glide bar, 2m section)	**93.21**	≈ 0.54kg
	Components as individual parts, installation set	**Part No.**	**Weight**
	1 clamping bracket, individual	**96.51**	≈ 0.31kg
	1 countersunk-head screw, individual	**92.53 / M6 x 14**	≈ 0.002kg
	1 hexagon nut, individual	**92.54 / M6**	≈ 0.002kg
	1 hexagon-head screw, individual	**92.55 / M10 x 16**	≈ 0.019kg
	1 glide nut, individual	**92.56 / M10**	≈ 0.015kg
	1 C-profile, individual (C-profile length according to dimension B_{Ri})	**92.52.XXX.E**[B]	≈ 0.90kg/m
	B) Please add the C-profile length XXX as shown on the tables. Example: **Part No. 92.52.375.E**.		

Option	Additional options for simple fastening without drilling	Part No.	
	1 set fixed end module, 2m section	**96.80.01**	≈22.80kg

1) Trough side parts + C-profile - also available in 304 stainless steel, material 1.4301 (AISI 304). Please add index **.E** to the Part No.

2) Trough side parts - also available in 316 stainless steel, material 1.4404 (AISI 316L). Please add index **.E44** to the Part No.

3) Trough side parts - also available in 316 stainless steel, material 1.4571 (AISI 316Ti). Please add index **.E45** to the Part No.

C-profile length (according to dimension B_{Ri})

E4Q.82/H4Q.82			E4.80/H4.80/R4.80			15050/15150/R19850			15250/15350			E6.80			5050HD/9850HD		
Width index	B_{Ri} [mm]	Part No. Installation set	Width index	B_{Ri} [mm]	Part No. Installation set	Width index	B_{Ri} [mm]	Part No. Installation set	Width index	B_{Ri} [mm]	Part No. Installation set	Width index	B_{Ri} [mm]	Part No. Installation set	Width index	B_{Ri} [mm]	Part No. Installation set
.100	**155**	96.50.275	.05	**105**	96.50.225	.05	**85**	upon request	.05	**85**	upon request	.05	**105**	96.50.225	.05	**115**	96.50.225
.112	**168**	96.50.300	.055	**110**	96.50.225	.055	**90**	upon request	.06	**103**	96.50.225	.06	**120**	96.50.250	.06	**130**	96.50.250
.125	**180**	96.50.300	.06	**120**	96.50.250	.06	**100**	upon request	.07	**110**	96.50.225	.07	**130**	96.50.250	.07	**140**	96.50.250
.137	**193**	96.50.325	.07	**130**	96.50.250	.07	**110**	96.50.225	.087	**122**	96.50.250	.08	**142**	96.50.275	.08	**152**	96.50.275
.150	**205**	96.50.325	.08	**142**	96.50.275	.08	**122**	96.50.250	.097	**132**	96.50.250	.10	**155**	96.50.275	.10	**165**	96.50.275
.162	**218**	96.50.350	.10	**155**	96.50.275	.10	**135**	96.50.250	.10	**135**	96.50.250	.11	**167**	96.50.300	.11	**177**	96.50.300
.175	**230**	96.50.350	.11	**168**	96.50.300	.11	**148**	96.50.275	.11	**143**	96.50.275	.12	**180**	96.50.300	.12	**190**	96.50.300
.187	**243**	96.50.375	.12	**180**	96.50.300	.12	**160**	96.50.275	.112	**148**	96.50.275	.13	**192**	96.50.325	.13	**202**	96.50.325
.200	**255**	96.50.375	.13	**193**	96.50.325	.13	**173**	96.50.300	.12	**160**	96.50.275	.15	**205**	96.50.325	.15	**215**	96.50.325
.212	**268**	96.50.400	.15	**205**	96.50.325	.15	**185**	96.50.300	.137	**172**	96.50.300	.16	**217**	96.50.350	.16	**227**	96.50.350
.225	**280**	96.50.400	.16	**218**	96.50.350	.16	**198**	96.50.325	.15	**185**	96.50.300	.17	**230**	96.50.350	.17	**240**	96.50.350
.237	**293**	96.50.425	169	**225**	96.50.350	.169	**205**	96.50.325	.162	**198**	96.50.325	.18	**242**	96.50.375	.18	**252**	96.50.375
.250	**305**	96.50.425	.17	**230**	96.50.350	.17	**210**	96.50.325	.17	**203**	96.50.325	.20	**255**	96.50.375	.20	**265**	96.50.375
.262	**318**	96.50.450	.182	**238**	96.50.350	.182	**218**	96.50.350	.18	**210**	96.50.325	.21	**267**	96.50.400	.21	**277**	96.50.400
.275	**330**	96.50.450	.18	**243**	96.50.375	.18	**223**	96.50.350	.187	**223**	96.50.350	.22	**280**	96.50.400	.22	**290**	96.50.400
.287	**343**	96.50.475	.20	**255**	96.50.375	.20	**235**	96.50.350	.20	**235**	96.50.350	.23	**292**	96.50.425	.23	**302**	96.50.425
.300	**355**	96.50.475	.207	**263**	96.50.375	.207	**243**	96.50.375	.212	**248**	96.50.375	.25	**305**	96.50.425	.25	**315**	96.50.425
.312	**368**	96.50.500	.21	**268**	96.50.400	.21	**248**	96.50.375	.23	**260**	96.50.375	.26	**317**	96.50.450	.26	**327**	96.50.450
.325	**380**	96.50.500	.22	**280**	96.50.400	.22	**260**	96.50.375	.237	**273**	96.50.400	.27	**330**	96.50.450	.27	**340**	96.50.450
.337	**393**	96.50.525	.23	**293**	96.50.425	.23	**273**	96.50.400	.25	**285**	96.50.400	.28	**342**	96.50.475	.28	**352**	96.50.475
.350	**405**	96.50.525	.25	**305**	96.50.425	.25	**285**	96.50.400	.262	**298**	96.50.425	.30	**355**	96.50.475	.30	**365**	96.50.475
.362	**418**	96.50.550	.26	**318**	96.50.450	.26	**298**	96.50.425	.28	**310**	96.50.425	.31	**367**	96.50.500	.31	**377**	96.50.500
.375	**430**	96.50.550	.27	**330**	96.50.450	.27	**310**	96.50.425	.29	**323**	96.50.450	.32	**380**	96.50.500	.32	**390**	96.50.500
.387	**443**	96.50.575	.28	**343**	96.50.475	.28	**323**	96.50.450	.30	**335**	96.50.450	.33	**392**	96.50.525	.33	**402**	96.50.525
.400	**455**	96.50.575	.30	**355**	96.50.475	.30	**335**	96.50.450	.312	**348**	96.50.475	.35	**405**	96.50.525	.35	**415**	96.50.525
.412	**468**	96.50.600	.31	**368**	96.50.500	.31	**348**	96.50.475	.325	**360**	96.50.475	.36	**417**	96.50.550	.36	**427**	96.50.550
.425	**480**	96.50.600	.32	**380**	96.50.500	.32	**360**	96.50.475	.337	**373**	96.50.500	.37	**430**	96.50.550	.37	**440**	96.50.550
.437*	493	96.50.625	.33	**393**	96.50.525	.33	**373**	96.50.500	.350	**385**	96.50.500	.38	**442**	96.50.575	.38	**452**	96.50.575
.450	**505**	96.50.625	.35	**405**	96.50.525	.35	**385**	96.50.500	.362	**398**	96.50.525	.40	**455**	96.50.575	.40	**465**	96.50.575
.462*	518	96.50.650	.36	**418**	96.50.550	.36	**398**	96.50.525	.375	**410**	96.50.525	.41	**470**	96.50.600	.41	**477**	96.50.600
.475*	530	96.50.650	.37	**430**	96.50.550	.37	**410**	96.50.525	.387	**423**	96.50.550	.42	**480**	96.50.600	.42	**490**	96.50.600
.487*	543	96.50.675	.38	**443**	96.50.575	.38	**423**	96.50.550	.400	**435**	96.50.550	.43	**492**	96.50.625	.43	**502**	96.50.625
.500	**555**	96.50.675	.40	**455**	96.50.575	.40	**435**	96.50.550				.45	**505**	96.50.625	.45	**515**	96.50.625
.512*	568	96.50.700	.41	**468**	96.50.600	.41	**448**	96.50.575				.46	**517**	96.50.650	.46	**527**	96.50.650
.525*	580	96.50.700	.42	**480**	96.50.600	.42	**460**	96.50.575				.47	**530**	96.50.650	.47	**540**	96.50.650
.537*	593	96.50.725	.43	**493**	96.50.625	.43	**473**	96.50.600				.48	**542**	96.50.675	.48	**552**	96.50.675
.550*	605	96.50.725	.45	**505**	96.50.625	.45	**485**	96.50.600				.50	**555**	96.50.675	.50	**565**	96.50.675
.600*	655	96.50.775	.46	**518**	96.50.650	.46	**498**	96.50.625				.51	**567**	96.50.700	.51	**577**	96.50.700
			.47	**530**	96.50.650	.47	**510**	96.50.625				.52	**580**	96.50.700	.52	**590**	96.50.700
			.48	**543**	96.50.675	.48	**523**	96.50.650				.53	**592**	96.50.725	.53	**602**	96.50.725
			.50	**555**	96.50.675	.50	**535**	96.50.650				.55	**605**	96.50.725	.55	**615**	96.50.725
			.51	**568**	96.50.700	.51	**548**	96.50.675				.60	**655**	96.50.775	.60	**665**	96.50.775
			.52	**580**	96.50.700	.52	**560**	96.50.675									
			.53	**593**	96.50.725	.53	**573**	96.50.700									
			.55	**605**	96.50.725	.55	**585**	96.50.700									
			.60	**655**	96.50.775	.60	**635**	96.50.750									

* Available upon request.

Steel guide trough | Heavy-duty | 98.30 | 98.31

Product range | Trough height: 300mm

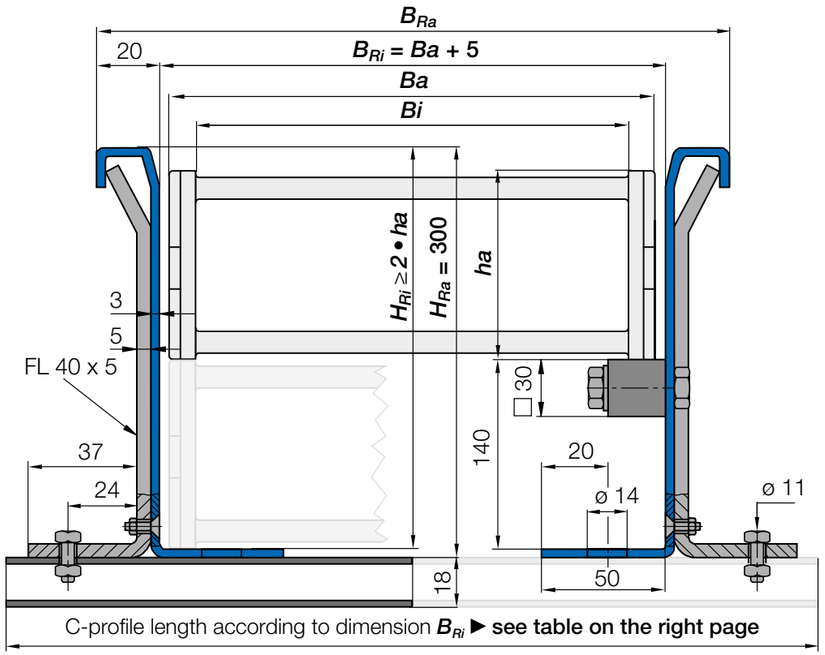

C-profile length according to dimension B_{Ri} ▶ **see table on the right page**

For the following series
E4.1
● E4.112/R4.112
E4/light
● 1640/R1608

Option: with reinforced mounting angles for extremely heavy-duty applications. For particularly demanding applications.

Note: The inner width of the guide through and the C-profile length of the installation set can differ according to the bracket you choose. Please call us.

Full sets

Full trough side part sets (2m pieces each)	Part No.	Weight
1 set of 2 trough side parts, without glide bars, 2m section	**98.30.E[1] / E44[2] / E45[3]**	≈ 34.60kg
1 set of 2 trough side parts, with glide bars, 2m section, galvanised steel	**98.31.E[1] / E44[2] / E45[3]**	≈ 39.00kg
Full installation set	**Part No.**	**Weight**
1 installation set without C-profile	**98.50**	≈ 1.16kg
1 installation set with C-profile (C-profile length according to dimension B_{Ri})	**98.50.XXX[A]**	upon request

A) Please add the C-profile length XXX as shown on the tables. Example: **Part No. 98.50.350**

Individual parts

Components as individual parts, trough	Part No.	Weight
1 trough side part, 2m section	**98.11.E[1] / E44[2] / E45[3]**	≈ 17.30kg
1 glide bar, 2m section	**93.01**	≈ 1.68kg
1 glide bar, 2m section + 11 screw sets	**93.20**	≈ 2.22kg
1 package with 11 screw sets (for glide bar, 2m section)	**93.21**	≈ 0.54kg
Components as individual parts, installation set	**Part No.**	**Weight**
1 clamping bracket, individual	**98.51**	≈ 0.52kg
1 countersunk-head screw, individual	**92.05 / M8 x 20**	≈ 0.002kg
1 hexagon nut, individual	**92.04 / M8**	≈ 0.002kg
1 hexagon-head screw, individual	**92.55 / M10 x 16**	≈ 0.019kg
1 glide nut, individual	**92.56 / M10**	≈ 0.015kg
1 C-profile, individual (C-profile length according to dimension B_{Ri})	**92.52.XXX.E[B]**	≈ 0.90kg/m

B) Please add the C-profile length XXX as shown on the tables. Example: **Part No. 92.52.350.E**.

Option

Additional options for simple fastening without drilling	Part No.	
1 set fixed end module, 2m section	**98.80.01**	≈ 34.60kg

1) Trough side parts + C-profile - also available in 304 stainless steel, material 1.4301 (AISI 304). Please add index **.E** to the Part No.

2) Trough side parts - also available in 316 stainless steel, material 1.4404 (AISI 316L). Please add index **.E44** to the Part No.

3) Trough side parts - also available in 316 stainless steel, material 1.4571 (AISI 316Ti). Please add index **.E45** to the Part No.

C-profile length (according to dimension B_{Ri})

E4.112/R4.112			1640/R1608		
Width index	B_{Ri} [mm]	Part No. Installation set	Width index	B_{Ri} [mm]	Part No. Installation set
.05	**107**	98.50.225	.05	**89**	upon request
.055	**112**	98.50.225	.055	**94**	upon request
.06	**122**	98.50.250	.06	**104**	98.50.225
.07	**132**	98.50.250	.07	**114**	98.50.250
.08	**144**	98.50.275	.08	**124**	98.50.250
.10	**157**	98.50.275	.10	**139**	98.50.275
.11	**169**	98.50.300	.11	**151**	98.50.275
.12	**182**	98.50.300	.12	**164**	98.50.300
.13	**194**	98.50.325	.13	**176**	98.50.300
.15	**207**	98.50.325	.15	**189**	98.50.325
.16	**219**	98.50.350	.16	**201**	98.50.325
.169	**227**	98.50.350	.169	**209**	98.50.325
.17	**232**	98.50.350	.17	**214**	98.50.350
.182	**240**	98.50.375	.182	**222**	98.50.350
.18	**244**	98.50.375	.18	**226**	98.50.350
.20	**257**	98.50.375	.20	**239**	98.50.375
.207	**265**	98.50.400	.207	**247**	98.50.375
.21	**269**	98.50.400	.21	**251**	98.50.375
.22	**282**	98.50.400	.22	**264**	98.50.400
.23	**294**	98.50.425	.23	**276**	98.50.400
.25	**307**	98.50.425	.25	**289**	98.50.425
.26	**319**	98.50.450	.26	**301**	98.50.425
.27	**332**	98.50.450	.27	**314**	98.50.450
.28	**344**	98.50.475	.28	**326**	98.50.450
.30	**357**	98.50.475	.30	**339**	98.50.475
.31	**369**	98.50.500	.31	**351**	98.50.475
.32	**382**	98.50.500	.32	**364**	98.50.500
.33	**394**	98.50.525	.33	**376**	98.50.500
.35	**407**	98.50.525	.35	**389**	98.50.525
.36	**419**	98.50.550	.36	**401**	98.50.525
.37	**432**	98.50.550	.37	**414**	98.50.550
.38	**444**	98.50.575	.38	**426**	98.50.550
.40	**457**	98.50.575	.40	**439**	98.50.575
.41	**469**	98.50.600	.41	**451**	98.50.575
.42	**482**	98.50.600	.42	**464**	98.50.600
.43	**494**	98.50.625	.43	**476**	98.50.600
.45	**507**	98.50.625	.45	**489**	98.50.625
.46	**519**	98.50.650	.46	**501**	98.50.625
.47	**532**	98.50.650	.47	**514**	98.50.650
.48	**544**	98.50.675	.48	**526**	98.50.650
.50	**557**	98.50.675	.50	**539**	98.50.675
.51	**569**	98.50.700	.51	**551**	98.50.675
.52	**582**	98.50.700	.52	**564**	98.50.700
.53	**594**	98.50.725	.53	**576**	98.50.700
.55	**607**	98.50.725	.55	**589**	98.50.725
.60	**657**	98.50.775	.60	**639**	98.50.775

Steel guide trough | Heavy-duty | 90.30 | 90.31

Product range | Trough height: 480mm

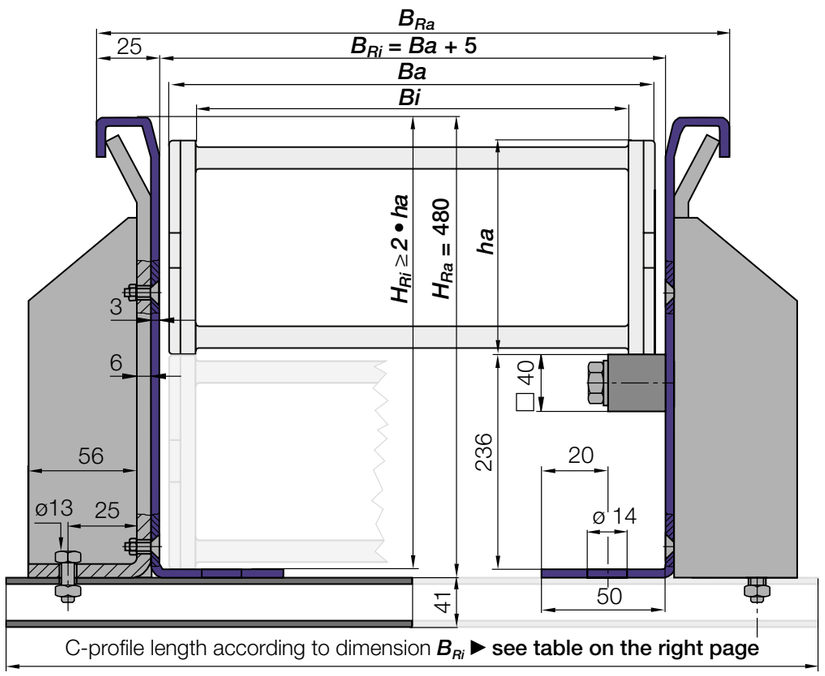

For the following series
E4.1
● 800
● 840



Option: with reinforced mounting angles for extremely heavy-duty applications. For particularly demanding applications.

Note: The inner width of the guide through and the C-profile length of the installation set can differ according to the bracket you choose. Please call us.

	Full trough side part sets (2m pieces each)	Part No.	Weight
Full sets	1 set of 2 trough side parts, without glide bars, 2m section	**90.30.E[1] / E44[2] / E45[3]**	≈ 53.40kg
	1 set of 2 trough side parts, with glide bars, 2m section, galvanised steel	**90.31.E[1] / E44[2] / E45[3]**	≈ 59.40kg
	Full installation set	**Part No.**	**Weight**
	1 installation set without C-profile	**90.50**	≈ 0.41kg
	1 installation set with C-profile (C-profile length according to dimension B_{Ri})	**90.50.XXX[A]**	upon request

A) Please add the C-profile length XXX as shown on the tables. Example: **Part No. 90.50.450**

	Components as individual parts, trough	Part No.	Weight
Individual parts	1 trough side part, 2m section	**90.11.E[1] / E44[2] / E45[3]**	≈ 26.70kg
	1 glide bar, 2m section	**90.01**	≈ 1.68kg
	1 glide bar, 2m section + 11 screw sets	**90.20**	≈ 2.22kg
	1 package with 11 screw sets (for glide bar, 2m section)	**90.21**	≈ 0.54kg
	Components as individual parts, installation set	**Part No.**	**Weight**
	1 clamping bracket, individual	**90.51**	≈ 0.52kg
	1 countersunk-head screw, individual	**MAT0040014 / M8 x 25**	≈ 0.010kg
	1 hexagon nut, individual	**MAT0040012 / M8**	≈ 0.005kg
	1 hexagon-head screw, individual	**MAT0040384 / M12 x 30**	≈ 0.053kg
	1 glide nut, individual	**MAT0040385 / M12**	≈ 0.020kg
	1 C-profile, individual (C-profile length according to dimension B_{Ri})	**IE70.41-41.XXX.E[B]**	≈ 0.90kg/m

B) Please add the C-profile length XXX as shown on the tables. Example:**Part No. IE70.41-41.450.**E.

Option	Additional options for simple fastening without drilling	Part No.	
	1 set fixed end module*, 2m section	**90.80.01**	≈ 53.40kg

*Fixed end module available upon request. please consult igus® for delivery time.

1) Trough side parts + C-profile - also available in 304 stainless steel, material 1.4301 (AISI 304). Please add index **.E** to the Part No.

2) Trough side parts - also available in 316 stainless steel, material 1.4404 (AISI 316L). Please add index **.E44** to the Part No.

3) Trough side parts - also available in 316 stainless steel, material 1.4571 (AISI 316Ti). Please add index **.E45** to the Part No.

C-profile length (according to dimension B_{Ri})

800		
Width index	B_{Ri} [mm]	Part No. Installation set
.20	**265**	90.50.450
.25	**315**	90.50.500
.30	**365**	90.50.550
.32	**390**	90.50.575
.35	**415**	90.50.600
.40	**465**	90.50.650
.45	**515**	90.50.700
.50	**565**	90.50.750
.55	**615**	90.50.800
.60	**665**	90.50.850

840		
Width index	B_{Ri} [mm]	Part No. Installation set
.13	**165**	90.50.350
.15	**178**	90.50.350
.16	**190**	90.50.375
.17	**203**	90.50.375
.18	**215**	90.50.400
.20	**228**	90.50.400
.21	**240**	90.50.425
.22	**253**	90.50.425
.23	**265**	90.50.450
.25	**278**	90.50.450
.26	**290**	90.50.475
.27	**303**	90.50.475
.28	**315**	90.50.500
.30	**328**	90.50.500
.31	**340**	90.50.525
.32	**353**	90.50.525
.33	**365**	90.50.550
.35	**378**	90.50.550
.36	**390**	90.50.575
.37	**403**	90.50.575
.38	**415**	90.50.600
.40	**428**	90.50.600
.41	**440**	90.50.625
.42	**453**	90.50.625
.43	**465**	90.50.650
.45	**478**	90.50.650
.46	**490**	90.50.675
.47	**503**	90.50.675
.48	**515**	90.50.700
.50	**528**	90.50.700
.51	**540**	90.50.725
.52	**553**	90.50.725
.53	**565**	90.50.750
.55	**578**	90.50.750
.60	**628**	90.50.800

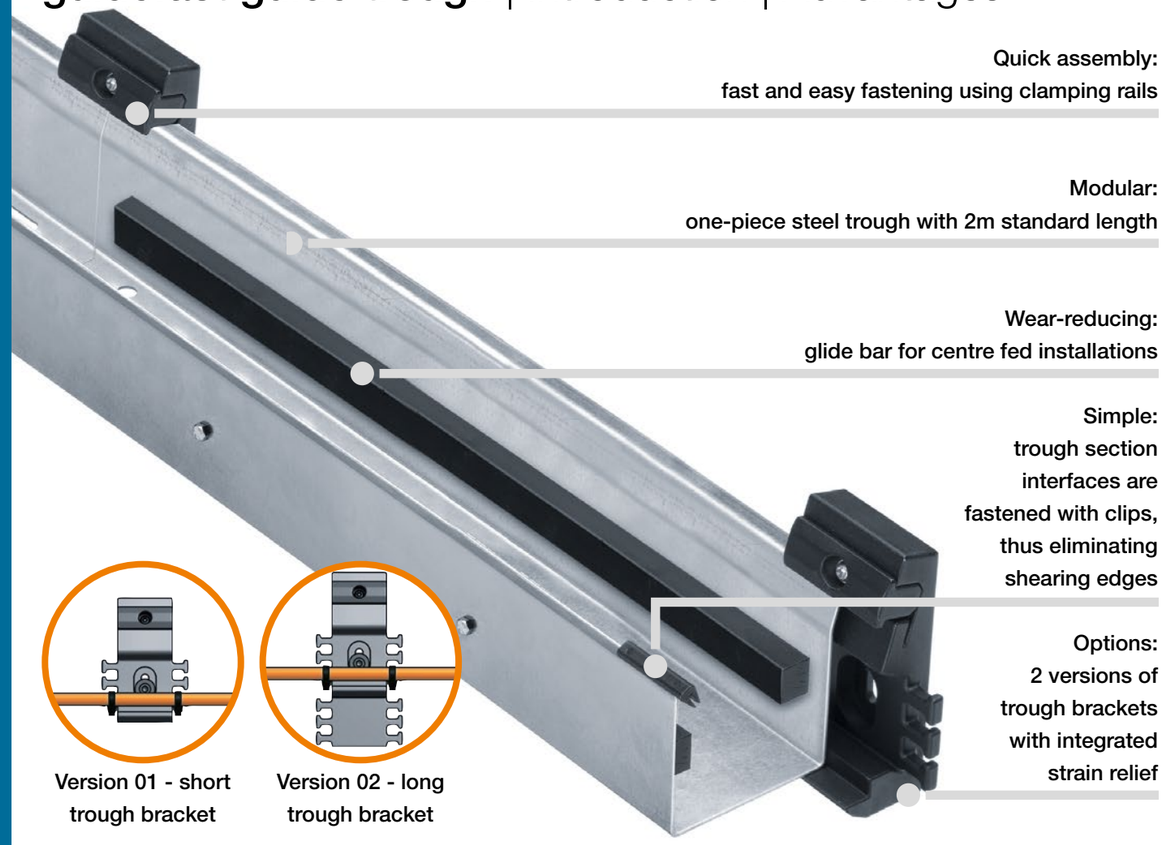

Version 01 - short trough bracket

Version 02 - long trough bracket

Economical energy supply for crane girders and indoor cranes - guidefast

The guidefast guide trough is mounted on the side of the crane girder. This means welded brackets are not necessary, e.g. when installing on crane girders. Assembly times are kept to a minimum as the guide trough only has to be hooked into the holder and then secured with the trough brackets. The small number of components and the fixed trough width also contribute easy assembly.

Benefits

- Save up to 80% installation time compared to standard trough systems
- Cost-effective modular solution
- Fits virtually any standard crane girder
- 2 versions of brackets with integrated strain relief for assembly of static cables on the crane girder
- Suitable for any side-mounted application - not only on cranes
- Easy to install due to preassembled hole patterns of e-chain® brackets
- Material: galvanised steel, 304 stainless steel or black powder coated
- Conductivity according to DIN EN 61537: as standard with special connector
- Long-term tested to withstand vibration and tough environments

Typical application areas

- Crane manufacturers (mainly indoor cranes)
- Applications where the side installation of the guide trough is beneficial

Selection table

Part No. without glide bars	Part No. with glide bars	For e-chains® series *Bi* [mm]		B_{Ri} [mm]	Overall width [mm]	Material Trough profile*	Page
guidefast - without and with glide bars							
GF91.30.025.2000	**GF91.31.025.2000**	E2.21.025.	1500.025.	42.5	81	Galvanised steel	**530**
GF91.30.050.2000	**GF91.31.050.2000**	E2.21.050.	1500.050.	67.5	106	Galvanised steel	**530**
GF92.30.03.2000	**GF92.31.03.2000**	E2.26.038.	2500.03.	58	96.5	Galvanised steel	**530**
GF92.30.05.2000	**GF92.31.05.2000**	E2.26.057.	2500.05.	77	115.5	Galvanised steel	**530**
GF92.30.07.2000	**GF92.31.07.2000**	E2.26.077.	2500.07.	97	135.5	Galvanised steel	**530**
GF92.30.09.2000	**GF92.31.09.2000**	E2.26.089.	2500.09.	109	145.5	Galvanised steel	**530**
GF92.30.10.2000	**GF92.31.10.2000**	E2.26.103.	2500.10.	123	161.5	Galvanised steel	**530**
GF95.30.05.2000	**GF95.31.05.2000**	E2.38.050.	2700.05.	70	108.5	Galvanised steel	**530**
GF95.30.07.2000	**GF95.31.07.2000**	E2.38.075.	2700.07.	95	133.5	Galvanised steel	**530**
GF95.30.10.2000	**GF95.31.10.2000**	E2.38.100.	2700.10.	120	158.5	Galvanised steel	**530**

*Optional: 304 stainless steel, material 1.4301 (AiSI 304) or black powder coated.

guidefast guide trough | Application example

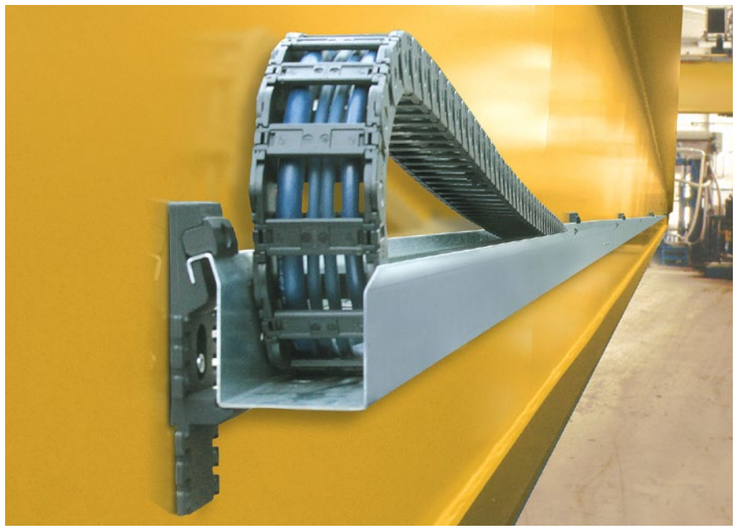

guidefast - attachment to the crane girder using welded bolts or nut/thread, here with version 2 long trough bracket.

Individual parts | Installation dimensions

Components, guidefast set

❶ Trough profile, 2m section
❷ Glide bar, polymer, 2m section, optional
❸ Clip connector, Part No. 908.467
(electrically conductive clip: 911.301.CD)

Components - trough bracket

Ⓐ Version 01 - short trough bracket
Ⓑ Version 02, long trough bracket
Ⓒ Clamping blocks, Part No. G9.2.10

Ba = Outer e-chain® width
Bi = Inner e-chain® width
ha = e-chain® outer height
H_{Ri} = Trough inner height
H_{Ra} = Trough outer height
B_{Ri} = Trough inner width
B_{Ra} = Trough outer width

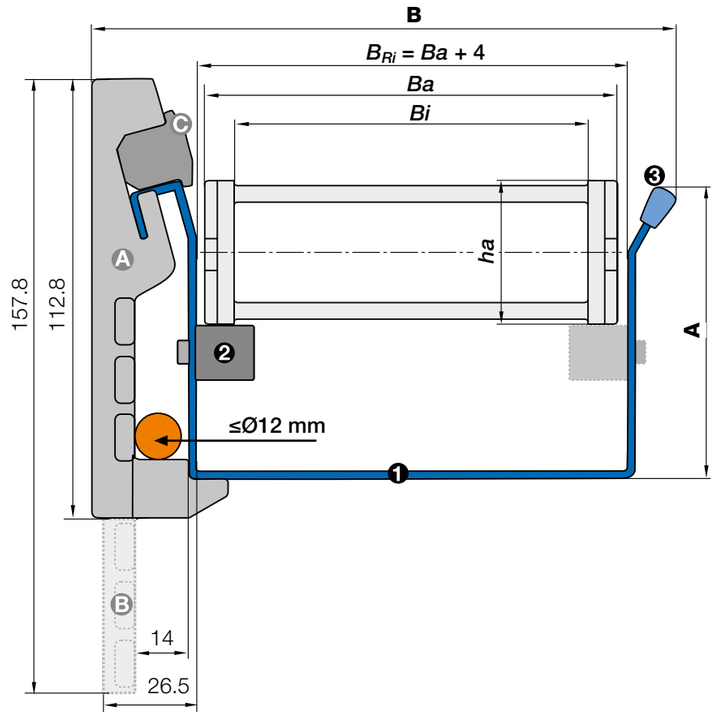

Product range

Part No. without glide bar (set with clips)	Part No. with glide bar (set with clips)	For the following e-chains® series	B_{Ri} [mm]	A [mm]	B [mm]	Trough bracket, short version 01* (Set with clamping blocks)	Trough bracket, long version 02* (Set with clamping blocks)
GF91.30.025.2000	GF91.31.025.2000	E2.21.025. 1500.025.	42.5	61	81	GF9.2.12	GF9.2.11
GF91.30.050.2000	GF91.31.050.2000	E2.21.050. 1500.050.	67.5	61	106	GF9.2.12	GF9.2.11
GF92.30.03. 2000	GF92.31.03. 2000	E2.26.038. 2500.03.	58	75	97	GF9.2.12	GF9.2.11
GF92.30.05. 2000	GF92.31.05. 2000	E2.26.057. 2500.05.	77	75	115.5	GF9.2.12	GF9.2.11
GF92.30.07. 2000	GF92.31.07. 2000	E2.26.077. 2500.07.	97	75	135.5	GF9.2.12	GF9.2.11
GF92.30.09. 2000	GF92.31.09. 2000	E2.26.089. 2500.09.	109	75	148	GF9.2.12	GF9.2.11
GF92.30.10. 2000	GF92.31.10. 2000	E2.26.103. 2500.10.	123	75	161.5	GF9.2.12	GF9.2.11
GF95.30.05. 2000	GF95.31.05. 2000	E2.38.050. 2700.05.	70	105	108.5	GF9.2.12	GF9.2.11
GF95.30.07. 2000	GF95.31.07. 2000	E2.38.075. 2700.07.	95	105	133.5	GF9.2.12	GF9.2.11
GF95.30.10. 2000	GF95.31. 10. 2000	E2.38.100. 2700.10.	120	105	158.5	GF9.2.12	GF9.2.11

*Trough bracket with integrated strain relief, ± 5mm vertical adjustment.

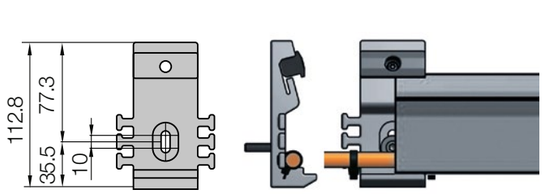

Version 01 - short trough bracket Part No. GF9.2.12.

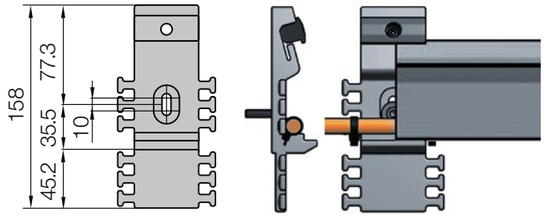

Version 02 - long trough bracket Part No. GF9.2.11.

guidefast guide trough | Series GF91.30 / GF91.31

GF91.30
GF91.31

Length calculation

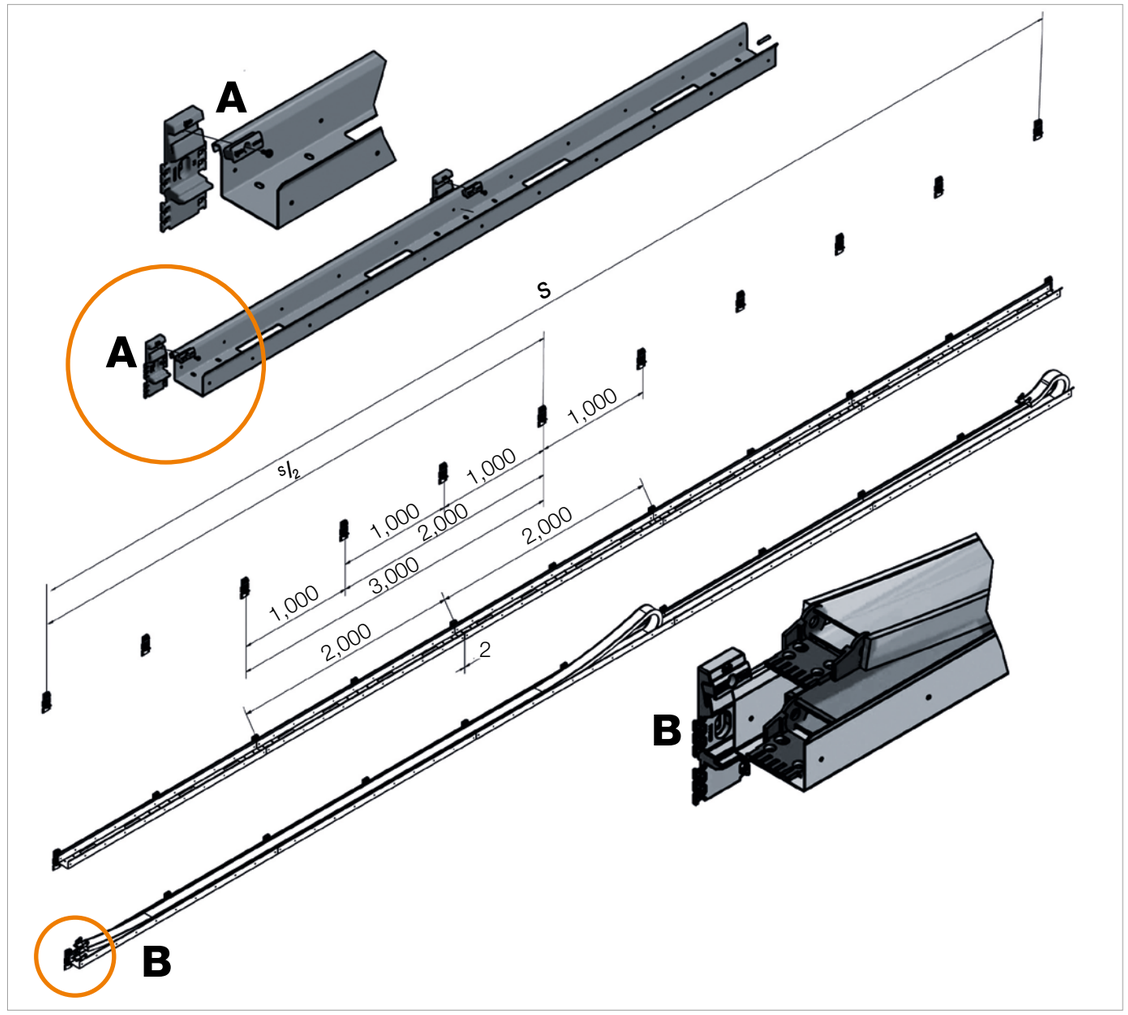

Order example | Calculation

Order example for end fed, travel ≈ 9.5m / guide trough 10m

Trough profile set without glide bar (incl. 5 clip connectors) **Order text: 10m = 5 x 2m sections trough profile, without glide bar**	**GF92.30.07.2000**
Trough brackets (incl. 11 clamping blocks, long Version 02) **Order text: 11 x trough brackets**	**GF9.2.11**

10m = 5 x 2m sections trough profile, without glide bar + 11 x trough brackets
10m = 5 x GF92.30.07.2000 + 11 x GF9.2.11

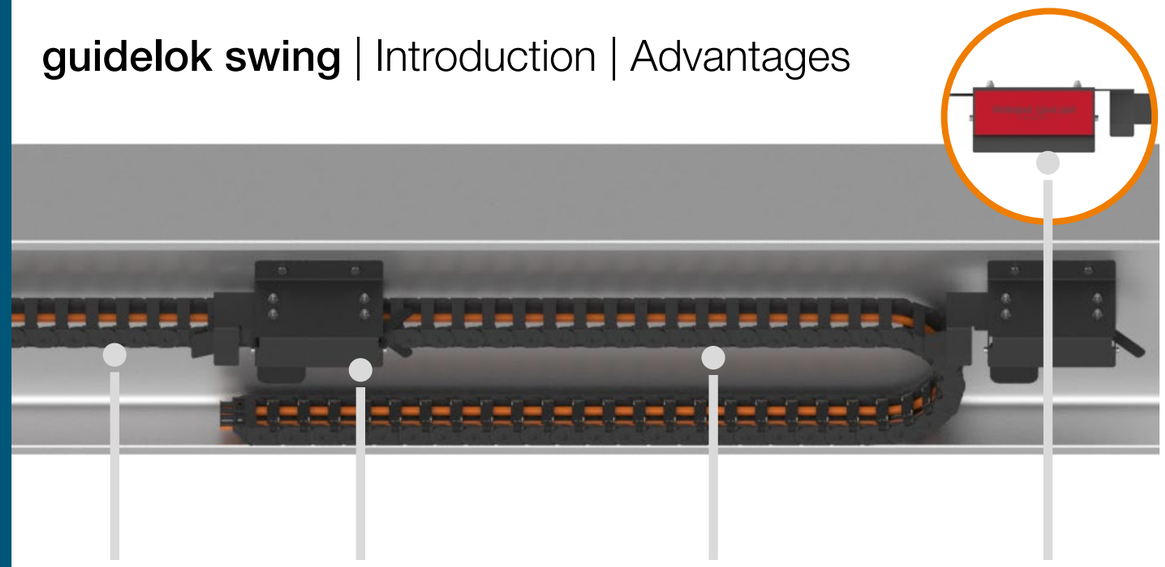

e-chain® series E2i.21: available with inner widths of 25mm or 38mm

guidelok swing elements: the upper run is held above the trolley by rockers

Low wear and long service life: thanks for large sliding surfaces along the outer radius

Self-adhesive variant: super-fast and easy installation with adhesive pads

For jib cranes with travels up to 10m - guidelok swing GLO.S

The guidelok swing is a very compact locking device on the upper run for applications with a moving lower run. The lower run is attached to the trolley of the jib crane and slides on the crane girder. Thanks to the wider sliding surfaces in the outer radius of the E2i.21, the chain glides smoothly over the carrier, which results in a very long service life.

- Very slim, space-saving design
- Long service life due to safely guided cables
- No cable loops hanging down
- Cost-effective – without the need for any guide troughs
- New, more affordable FP module makes end-fixed system even more cost-effective
- Save installation time
- The new self-adhesive version makes installation even more cost-effective and easy without drilling

Typical application areas

- Jib cranes
- Slow or hand-operated indoor crane applications

Selection table

Part No.	Inner width *Bi* [mm]	Inner height *hi* [mm]	Bend radius *R* [mm]	For e-chain® series	Page
GLO.S. - bolted installation, for e-chains® with inner widths up to 38mm					
GLO.S.E2i.21.025.1.L/R	025	21	038 - 100	E2i.21	534
GLO.S.E2i.21.038.1.L/R	038	21	038 - 100	E2i.21	534
GLO.S...G - self-adhesive installation, for e-chains® with inner widths up to 25mm					
GLO.S.E2i.21.025.1.G.L/R	025	21	038 - 100	E2i.21	535

Technical data

General properties	
Speed horizontal	≤ 1m/s
Acceleration	≤ 5m/s²

Note: This type of system should be designed in conjunction with our engineering team.
All information on this page is for guidance only.
Please contact us at ▶ **www.igus.eu/contact**

Cable guide guidelok swing GLO.S



Jib cranes are an indispensable part of industry. They transport workpieces of all kinds - to loading ramps, processing machines and assembly stations. However, failures can always occur. To increase system safety and productivity, igus® has developed energy supply system guidelok swing GLO.S. With the guidelok swing GLO.S, energy and data cables no longer hang in the air, but move directly in the jib crane's girder contour.

Product range for bolted variant

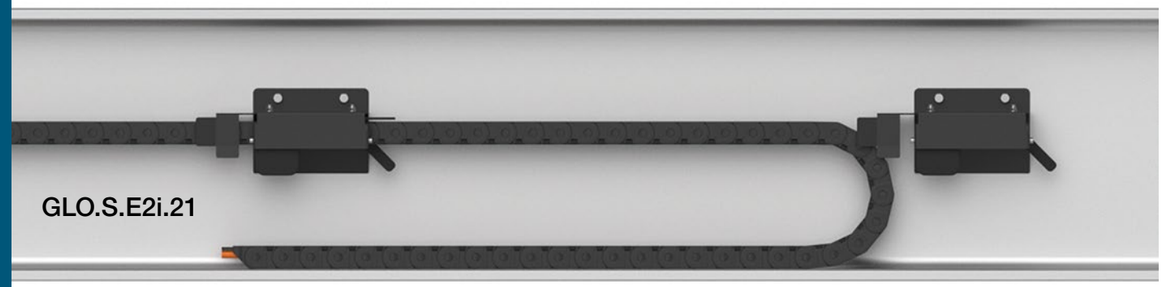

Part No. guidelok swing	Installation version	Suitable for series	Space required[2] height [mm]	Min. support surface [mm]	Max. fillet radius [mm]
Upper run rocker		**E2i.21.025 ...**			
GLO.S.E2i.21.025.1.R	Right-hand	**E2i.21.025.038.0**	142	56	15
GLO.S.E2i.21.025.1.L	Left-hand	**E2i.21.025.048.0**	162	56	15
Fixed end module		**E2i.21.025.075.0**	216	56	15
GLO.S.E2i.21.025.4	Incl. support tray[1]	**E2i.21.025.100.0**	266	56	15
Upper run rocker		**E2i.21.038 ...**			
GLO.S.E2i.21.038.1.R	Right-hand	**E2i.21.038.038.0**	142	80	30
GLO.S.E2i.21.038.1.L	Left-hand	**E2i.21.038.048.0**	162	80	30
Fixed end module		**E2i.21.038.075.0**	216	80	30
GLO.S.E2i.21.038.4	Incl. support tray[1]	**E2i.21.038.100.0**	266	80	30

1) End-fixed. 2) The surface for screwing onto the guidelok swing components must be flat.
The components cannot be screwed into the radius of the crane girder.

Quantities for different travel lengths - bolted and adhesive versions

Quantity with:	Center feed [pc.]		End feed [pc.]	
Travel distance [m]	GLO.S.E2i.21.025.1.L/R GLO.S.E2i.21.038.1.L/R GLO.S.E2i.21.025.1.G.L/R	GLO.S.E2i.21.025.4 GLO.S.E2i.21.038.4 GLO.S.E2i.21.025.4.G	GLO.S.E2i.21.025.1.L/R GLO.S.E2i.21.038.1.L/R GLO.S.E2i.21.025.1.G.L/R	GLO.S.E2i.21.025.4 GLO.S.E2i.21.038.4 GLO.S.E2i.21.025.4.G
3.0	1	1	1	3
3.5	2	1	2	3
4.0	2	1	2	4
4.5	2	1	2	4
5.0	3	1	3	4
5.5	3	1	3	5
6.0	3	1	3	5
6.5	4	1	4	5
7.0	4	1	4	6
7.5	4	1	4	6
8.0	4	1	4	6
8.5	5	1	5	7
9.0	5	1	5	7
9.5	5	1	5	7
10	6	1	6	8

Product range for self-adhesive variant

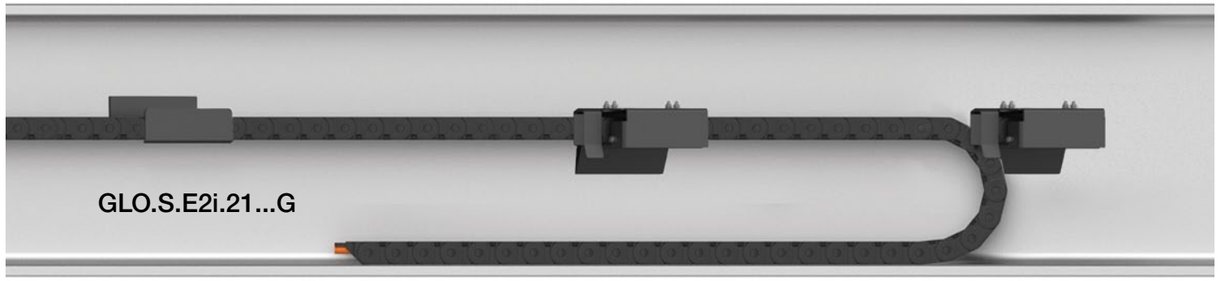

Part No. guidelok swing	Installation version	Suitable for series	Space required[2] height [mm]	Min. support surface [mm]	Max. fillet radius [mm]
Upper run rocker		**E2i.21.025 ...**			
GLO.S.E2i.21.025.1.G.R	Right-hand	**E2i.21.025.038.0**	114	56	15
GLO.S.E2i.21.025.1.G.L	Left-hand	**E2i.21.025.048.0**	134	56	15
Fixed end module		**E2i.21.025.075.0**	188	56	15
GLO.S.E2i.21.025.4.G	Incl. support tray[1]	**E2i.21.025.100.0**	238	56	15

1) End-fixed. 2) The surface for screwing onto the guidelok swing components must be flat.
The components cannot be screwed into the radius of the crane girder.

Note: This type of system should be designed in conjunction with our engineering team.
All information on this page is for guidance only.
Please contact us at ▶ **www.igus.eu/contact**

Installation dimensions of bolted and self-adhesive variants

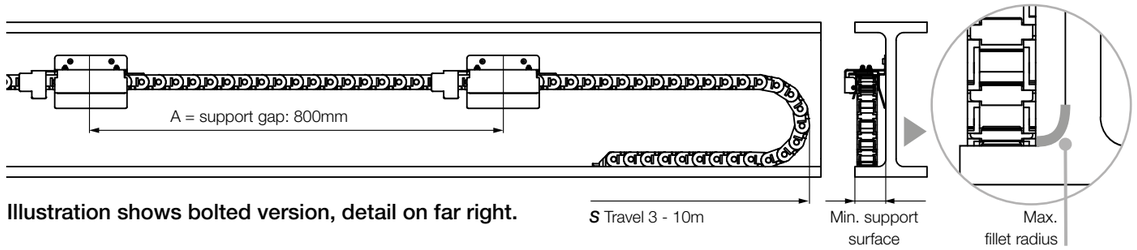

Illustration shows bolted version, detail on far right.

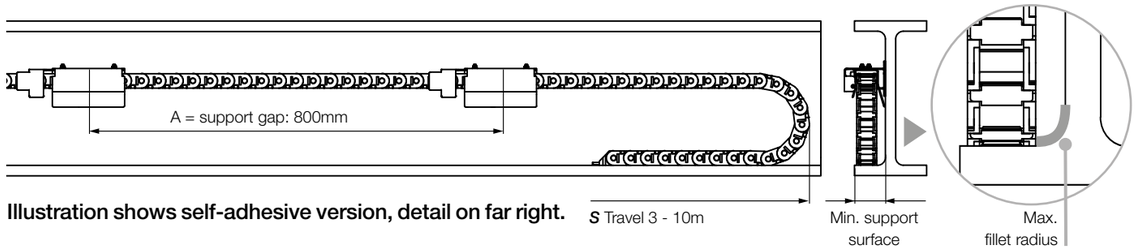

Illustration shows self-adhesive version, detail on far right.

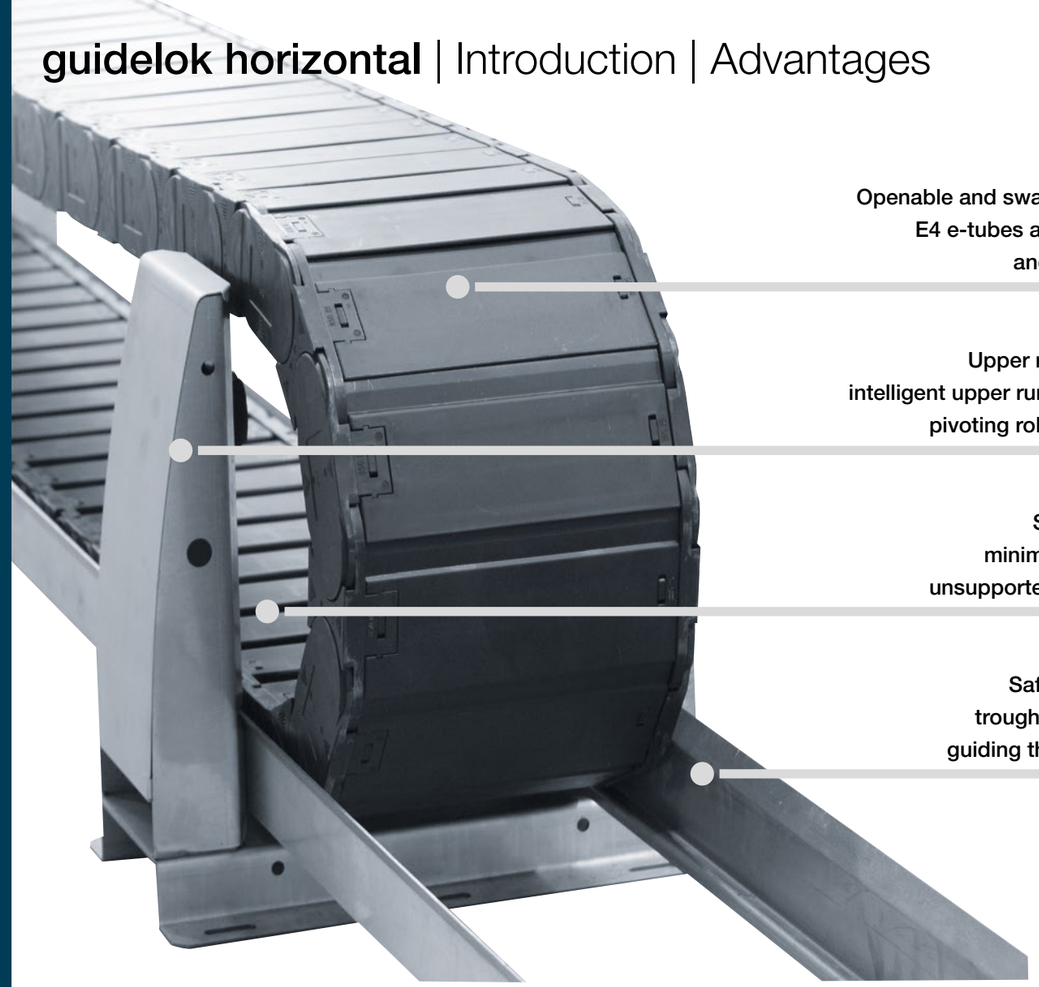

Upper run guide for long travels, unsupported in swarf areas - guidelok horizontal

Especially for long travels on machine tools, when the e-chain® would normally need to glide but metallic swarf is a problem; guidelok is the cost-effective solution for unsupported travel lengths up to 50m. guidelok horizontal is more cost-effective than most steel chains or gliding systems.

- Swarf cannot get stuck between upper and lower run
- Modular system with few parts (also possible without lateral trough)
- Enormous increase of unsupported lengths for energy chains
- Intelligent upper run guide with pivoting roller brackets

Typical application areas

- Machine tools
- Heavy swarf environments
- Wherever a gliding application is not recommended

Selection table

Part No.	Inner width* *Bi* [mm]	Inner height* *hi* [mm]	Bend radius* *R* [mm]	For e-chain® series	Page
907.645 - for E4.1 e-chains® and e-tubes with bend radii up to 300mm					
907.645	50 - 600	56 - 112	150 - 300	E4/R4.56, E4/R4.80, E4/R4.120	**538**
907.837 - for E4.1 e-chains® and e-tubes with bend radii from 350mm to 500mm					
907.837	200 - 600	56 - 112	350 - 500	E4/R4.56, E4/R4.80, E4/R4.120	**538**

*Depending on the e-chain® series used.
More series and radii upon request, please consult igus® for delivery time.

Technical data

General properties	
Speed horizontal	≤ 1.0m/s
Acceleration	≤ 5m/s²

Note: This type of system should be designed in conjunction with our engineering team.
All information on this page is for guidance only.
Please contact us at ▶ **www.igus.eu/contact**

Further solution for long travel applications

Cleanroom-compatible roller supports - GLO.CR

- Very low particle emission thanks to optimised roller surfaces and spring tensile force, can be motorised (optional)
- Advantages of cleanroom chains also for long travel lengths
- IPA certification of a complete system with four supports and E6.52 with Cleanroom Class ISO 5 for GLO.CR.56 series

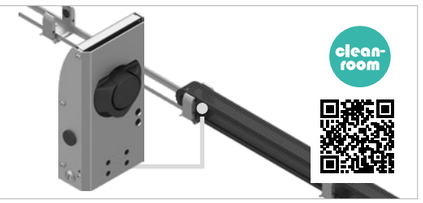

guidelok horizontal | Series 907.645 / 907.837

Product range

Part No.	For series	Inner width *Bi* [mm]	Bend radii *R* [mm]
Series 907.645 for E4.1 e-chains® with bend radii up to 300mm			
907.645.Bi.R.LLLL/FFFF	E4.56	50 - 600	| 150 | 175 | 200 | 250 | 300 |
907.645.Bi.R.LLLL/FFFF	E4.80	50 - 600	| 150 | 175 | 200 | 250 | 300 |
907.645.Bi.R.LLLL/FFFF	E4.112	50 - 600	| – | – | 200 | 250 | 300 |
Series 907.645 for E4.1 e-tubes with bend radii up to 300mm			
907.645.Bi.R.LLLL/FFFF	R4.56	75 - 462	| 150 | 175 | 200 | 250 | 300 |
907.645.Bi.R.LLLL/FFFF	R4.80	150 - 462	| – | 175 | 200 | 250 | 300 |
907.645.Bi.R.LLLL/FFFF	R4.112	200 - 500	| – | – | – | 250 | 300 |
Series 907.837 for E4.1 e-chains® with bend radii from 350mm to 500mm			
907.837.Bi.R.LLLL/FFFF	E4.56	200 - 600	| 350 | 400 | 450 | 500 |
907.837.Bi.R.LLLL/FFFF	E4.80	200 - 600	| 350 | 400 | 450 | 500 |
907.837.Bi.R.LLLL/FFFF	E4.112	200 - 600	| 350 | 400 | 450 | 500 |
Series 907.837 for E4.1 e-tubes with bend radii from 350mm to 500mm			
907.837.Bi.R.LLLL/FFFF	R4.56	200 - 462	| 350 | 400 | 450 | 500 |
907.837.Bi.R.LLLL/FFFF	R4.80	200 - 462	| 350 | 400 | 450 | 500 |
907.837.Bi.R.LLLL/FFFF	R4.112	200 - 500	| 350 | 400 | 450 | 500 |

Bi = width index R = bend radius LLLL = total length FFFF = channel section length

Installation dimensions

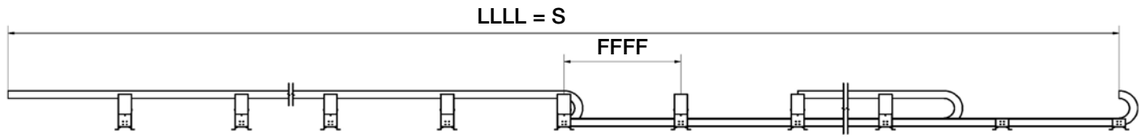

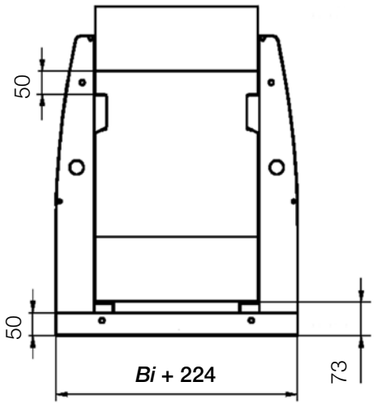

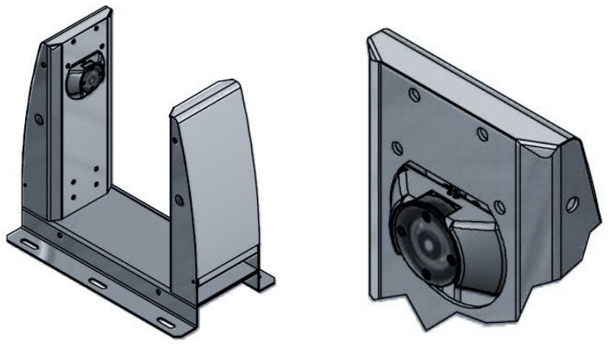

guidelok horizontal - lateral supports with pivoting rollers for the upper run support of the e-chain®.

Note: This type of system should be designed in conjunction with our engineering team.
All information on this page is for guidance only.
Please contact us at ▶ **www.igus.eu/contact**

guidelok horizontal | Application example

Unsupported energy chain in the horizontal lathe's chip area



Closed guidelok energy chain enables unsupported travel lengths of up to 50m. The Spanish mechanical engineering company Tornos Gurutzpe S.A., based in Guipúzcoa, has delivered more than 5,000 machines within half a century. Its horizontal lathe, the "A-2000 4G CNC", is equipped with a novel energy chain solution for long unsupported travels in swarf areas.

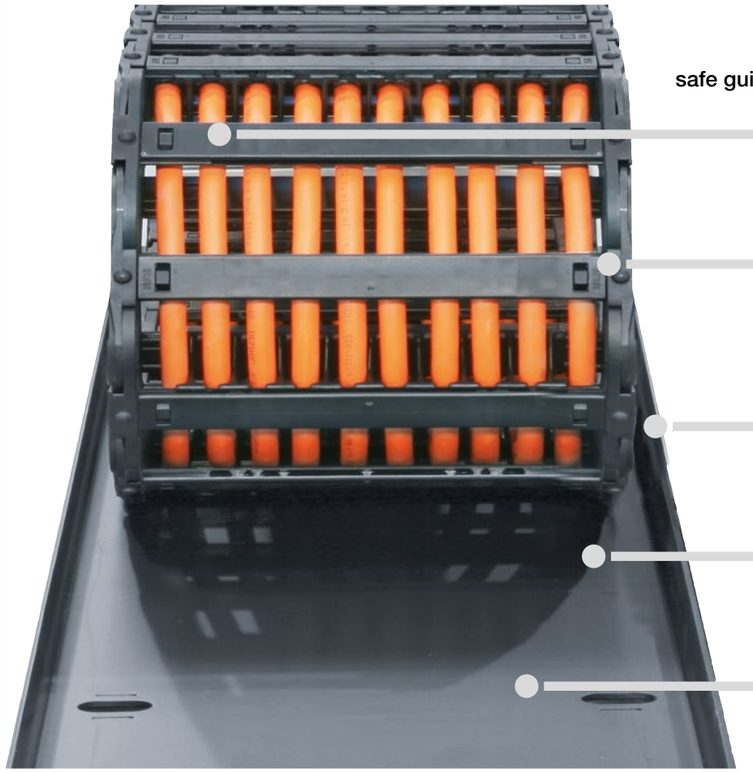

Noise and wear-reducing:
safe guidance of the lower run of your e-chain®
for standard applications

Flexible one-piece solution:
for a large selection of igus®
E2/000 and E4.1 e-chains®

Simple design:
easy mounting to all types of
profiles and wall brackets

Complete system:
ready to install

Lightweight material:
available in the colour
of your choice

For easy support of the lower run - steel support tray

Simple one-piece steel support trays for the e-chain® lower run to your requirements and specification. Your width, height and colour - we supply the fitting e-chain®, together with the support tray system, ready to install onto your machine or application. Save time on procurement and design.

Benefits

- Complete system, ready to install
- Avoids costly custom designs
- Easy installation onto your machine, on profiles or wall brackets
- Steel support tray - available from stock in 2 types and 4 options as modular system
- Available with KMA mounting bracket for many e-chains®
- Standard lengths from stock 1m and 2m
- All connection rails 975mm
- Wall brackets for easy attachment to your application available

Selection table

Part No.	e-chains® *Bi** [mm]	B_{Ra} [mm]	B_{Ri} [mm]	Material Steel	Page
Type 01 - for guide trough widths from 89mm to 185mm					
S9.010.05. / S9.011.05.	.05 / .050	89	80	powdered black	**542**
S9.010.07. / S9.011.07.	.07 / .070	114	105	powdered black	**542**
S9.010.10. / S9.011.10.	.10 / .100	139	130	powdered black	**542**
S9.010.15. / S9.011.15.	.15 / .150	185	175	powdered black	**542**
Type 02 - for guide trough widths from 167mm to 317mm					
S9.020.10. / S9.021.10.	.10 / .100	167	156	powdered black	**543**
S9.020.15. / S9.021.15.	.15 / .150	217	206	powdered black	**543**
S9.020.20. / S9.021.20.	.20 / .200	267	256	powdered black	**543**
S9.020.25. / S9.021.25.	.25 / .250	317	306	powdered black	**543**

*__Bi__ depends on width-index.

Versions

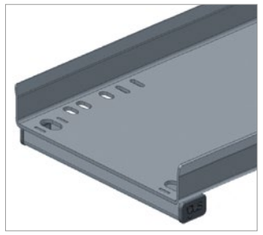

Option 01 - with connection rail

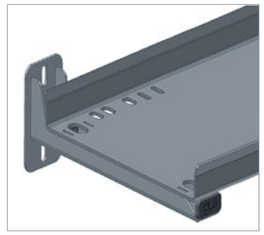

Option 02 - with wall bracket

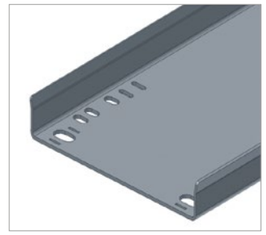

Option 03 - without rail (upon request)

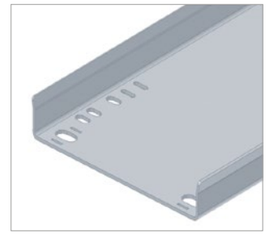

Option 04 - customised (upon request)

Steel support tray type 01 | Series S9.010. / S9.011.

Product range

For the following systems	Suitable for the following series	Width index	B_{Ra} [mm]	B_{Ri} [mm]	Part No. Support tray, single	Part No. Support tray with wall bracket	Part No. Wall bracket, single
E2.1: **E2/000:** **E4Q:** **E4.1:**	E2.26 2400/2450/2480/ E4Q.34/H4Q.34 E4.32/H4.32/R4.32	.05.	89	80	**S9.010.05.**XXXX**.0**	**S9.011.05.**XXXX**.0**	**907.724.05.0**
		.07.	114	105	**S9.010.07.**XXXX**.0**	**S9.011.07.**XXXX**.0**	**907.724.07.0**
		.10.	139	130	**S9.010.10.**XXXX**.0**	**S9.011.10.**XXXX**.0**	**907.724.10.0**
E2.1: **E2/000:** **E4.1L:**	E2.38 2600/2650/2680/2700 E4.38L/R4.38L	.05.	89	80	**S9.010.05.**XXXX**.0**	**S9.011.05.**XXXX**.0**	**907.724.05.0**
		.07.	114	105	**S9.010.07.**XXXX**.0**	**S9.011.07.**XXXX**.0**	**907.724.07.0**
		.10.	139	130	**S9.010.10.**XXXX**.0**	**S9.011.10.**XXXX**.0**	**907.724.10.0**
		.15.	185	175	**S9.010.15.**XXXX**.0**	**S9.011.15.**XXXX**.0**	**907.724.15.0**
E2.1: **E2/000:** **E4Q:** **E4.1:**	E2.26 2400/2450/2480/ E4Q.34/H4Q.34 E4.32/H4.32/R4.32	.050.	89	80	**S9.010.05.**XXXX**.0**	**S9.011.05.**XXXX**.0**	**907.724.05.0**
		.070.	114	105	**S9.010.07.**XXXX**.0**	**S9.011.07.**XXXX**.0**	**907.724.07.0**
		.100.	139	130	**S9.010.10.**XXXX**.0**	**S9.011.10.**XXXX**.0**	**907.724.10.0**
E4.1: **E6.1:** **E6:**	E4.21 EF61.29/E61.29 E61.35, E61.40 E6.29/R6.29 E6.35, E6.40/R6.40	.050.	89	80	**S9.010.05.**XXXX**.0**	**S9.011.05.**XXXX**.0**	**907.724.05.0**
		.070.	114	105	**S9.010.07.**XXXX**.0**	**S9.011.07.**XXXX**.0**	**907.724.07.0**
		.100.	139	130	**S9.010.10.**XXXX**.0**	**S9.011.10.**XXXX**.0**	**907.724.10.0**
		.150.	185	175	**S9.010.15.**XXXX**.0**	**S9.011.15.**XXXX**.0**	**907.724.15.0**

Note: Please use these support trays only in combination with KMA mounting brackets!
For other lengths, widths and colours, please contact us.

Order key

S9.010.07.1000.0

Support tray | Without wall bracket | Width index | Standard length | Colour

Order example:
Complete Part No. XXXX with the required standard length 1000 or 2000. Example:
S9.010.15.1000**.0** = with 1m standard length, without wall bracket
S9.011.15.2000**.0** = with 2m standard length, with wall bracket

Installation dimensions

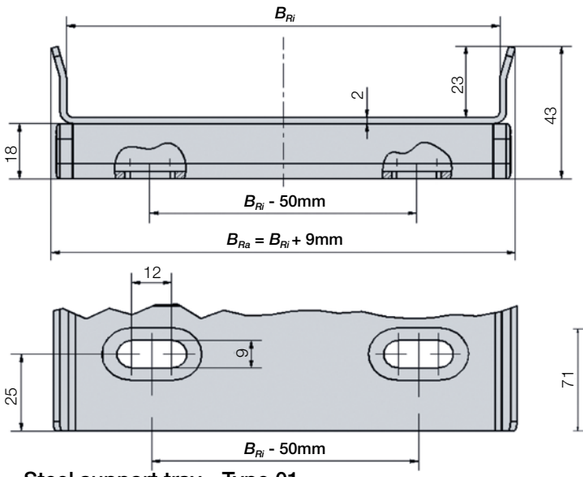

Steel support tray - Type 01

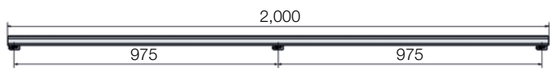

Standard lengths 1m and 2m -
all connection rails 975mm.

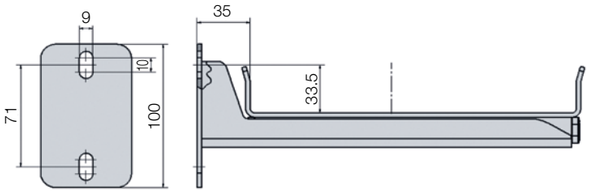

Bracket - Type 01

Steel support tray type 02 | Series S9.020. / S9.021.

Product range

For the following systems	Suitable for the following series	Width index	B_{Ra} [mm]	B_{Ri} [mm]	Part No. Support tray, single	Part No. Support tray with wall bracket	Part No. Wall bracket, single
E4.1L: **E4Q:** **E4.1:** **E4/light** **E6.1** **E6**	E4.48L/R4.48L E4.64L E4Q.44/H4Q.44 E4Q.58/H4Q.58 E4Q.82/H4Q.82 E4.42/H4.42/R4.42 E4.56/H4.56/R4.56 E4.80/H4.80/R4.80 14040/14140/R18840 14240/14340 14550/14650/19050 15050/15150/R19850 15250/15350 E61.62 E61.80 E6.62 E6.80	.10.	167	156	**S9.020.10.**XXXX**.0**	**S9.021.10.**XXXX**.0**	**907.759.010.0**
		.15.	217	206	**S9.020.15.**XXXX**.0**	**S9.021.15.**XXXX**.0**	**907.759.015.0**
		.20.	267	256	**S9.020.20.**XXXX**.0**	**S9.021.20.**XXXX**.0**	**907.759.020.0**
		.25.	317	306	**S9.020.25.**XXXX**.0**	**S9.021.25.**XXXX**.0**	**907.759.025.0**
E2.1: **E2/000** **E6.1:** **E6:**	E2.48 3400/3450/3480/3500 E61.52 E6.52/R6.52	.100.	167	156	**S9.020.10.**XXXX**.0**	**S9.021.10.**XXXX**.0**	**907.759.010.0**
		.150.	217	206	**S9.020.15.**XXXX**.0**	**S9.021.15.**XXXX**.0**	**907.759.015.0**
		.200.	267	256	**S9.020.20.**XXXX**.0**	**S9.021.20.**XXXX**.0**	**907.759.020.0**
		.250.	317	306	**S9.020.25.**XXXX**.0**	**S9.021.25.**XXXX**.0**	**907.759.025.0**

Note: Please use these support trays only in combination with KMA mounting brackets!
For other lengths, widths and colours, please contact us.

Order key

S9.020.20.1000.0

Support tray | Without wall bracket | Width index | Standard length | Colour

Order example:
Complete Part No. XXXX with the required standard length 1000 or 2000. Example:
S9.020.20.1000**.0** = with 1m standard length, without wall bracket
S9.021.20.2000**.0** = with 2m standard length, with wall bracket

Installation dimensions

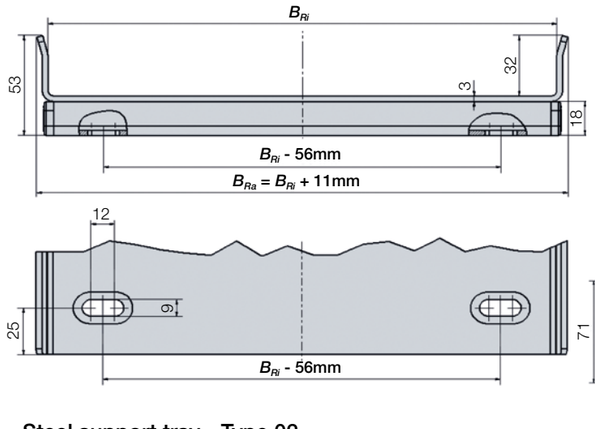

Steel support tray - Type 02

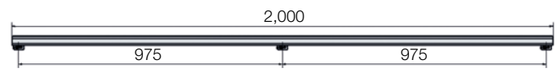

Standard lengths 1m and 2m -
all connection rails 975mm.

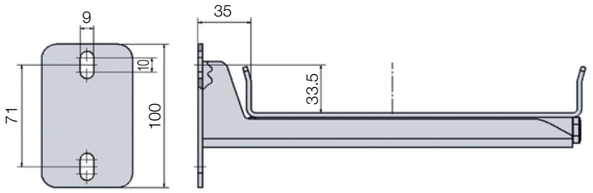

Steel support tray - Type 02

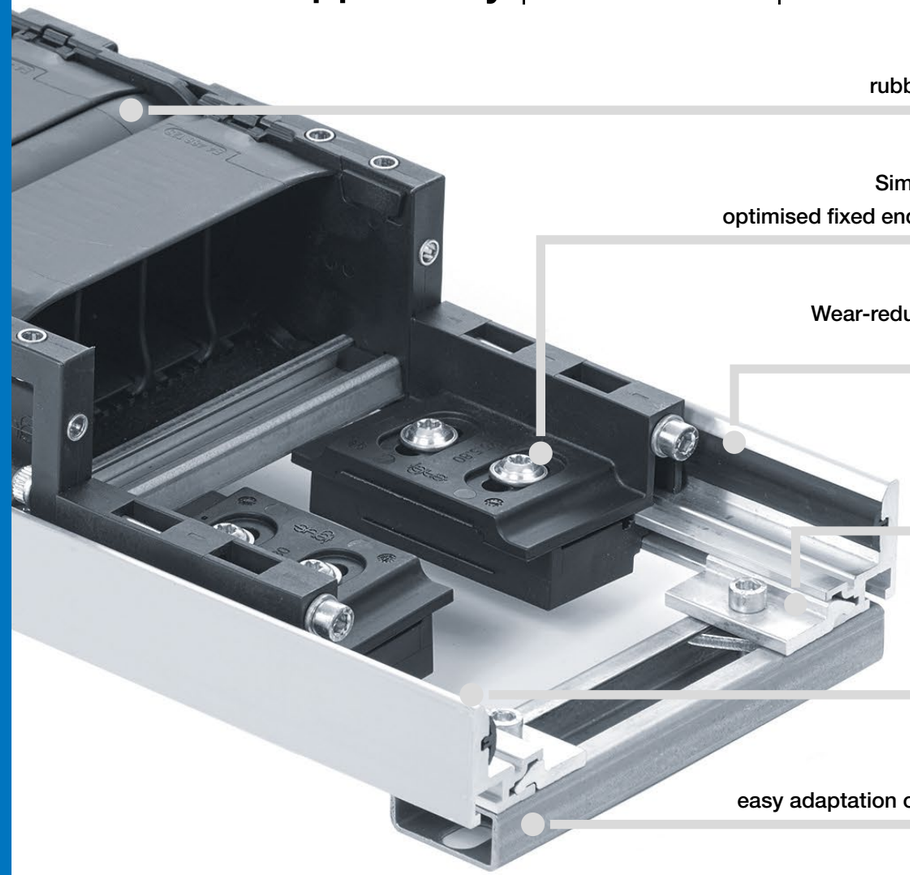

Support of the lower run for unsupported applications - aluminium support tray

The design of this aluminium support tray emulates the igus® aluminium SuperTrough. This modular construction kit covers the standard sizes of our e-chains®. Because of its flexible width adjustment using installation sets with C-profiles, the aluminium support tray is used with various e-chains® series and widths. An aluminium support tray consists of two 2 trough side parts each with 2m length. Standard installation sets can be used, just as for the aluminium SuperTrough.

Benefits

- Corrosion-resistant, seawater-resistant aluminium profile
- Wear-reducing glide strips integrated as standard
- Quiet movement of the e-chain® due to optional silencer profile
- Simple assembly on flexible width C-profiles with basic clamps
- e-chain® easily connects to aluminium support tray using plastic fixed end modules
- Open guide trough design, debris can fall through
- Conductivity according to DIN EN 61537 - standard

Selection table

Part No.	For the following e-chain systems®	Outer height H_{Ra} [mm]	B_{Ri} [mm]	Side part material	Page
Aluminium support tray - available with and without silencer profile					
9AT.35.SL / 9AT.35.SLA	E2.1, E2/000, R2.1, E4.1, E4.1L, E6.1, E6	35	≥ 80	Aluminium	**546**

Features

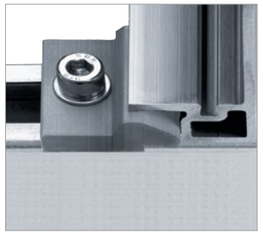

Simple fastening with basic bottom clamp and C-profile.

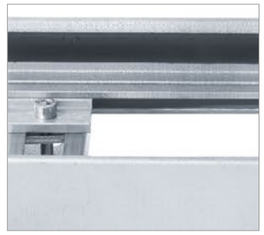

Wear-reducing due to glide strips.

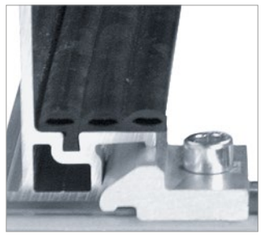

Noise-reducing with silencer profile option.

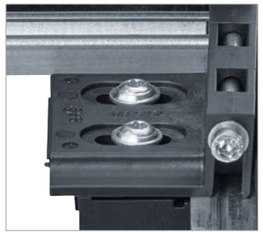

Simple connection to the e-chain® with the fixed end module.

Fixed end module | Product range

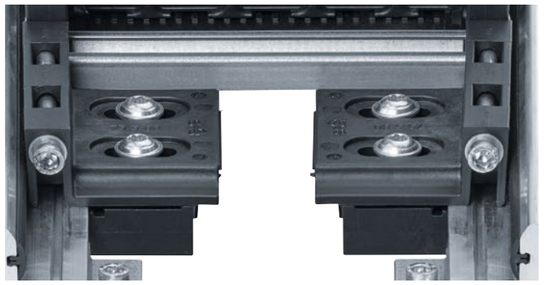

Fixed end module - to attach the e-chain® into the aluminium support tray

- Mounting bracket attachment on the aluminium support tray without drilling
- Fixed end module is clamped to the trough
- Save installation time
- Minimise errors from drilling your own holes
- Stainless and cost-effective

Part No.	For aluminium support tray	For e-chains® series	From ≥ *Bi* [mm]	Mounting bracket
971.80.4[1)]	9AT.35.SL / 9AT.35.SLA	E2.26/E2i.26/E2C.26, 2400/2500/2450/2480, E6.29, EF61.29/E61.29	.07	KMA
972.80.4[1)]	9AT.35.SL / 9AT.35.SLA	E4.31L/R4.31L, E4.28/R4.28, E6.35, E61.35	.06	KMA
972.80.4[1)]	9AT.35.SL / 9AT.35.SLA	E4.38L/R4.38L, E4Q.34/H4Q.34, E4.32/H4.32/R4.32, E6.40/R6.40, E61.40	.06	KMA
972.80.4[1)]	9AT.35.SL / 9AT.35.SLA	E2.38/E2i.38/E2C.38, 2600/2700/2650/2680	.06	KMA

1) Material: Plastic Material screw kits: Standard steel, galvanised.
Optional: 316 stainless steel, material 1.4571 (AISI 316Ti). Standard: galvanised steel

Aluminium support tray | Series 9AT.35.SL / 9AT.35.SLA

Product range | Trough height: 35mm

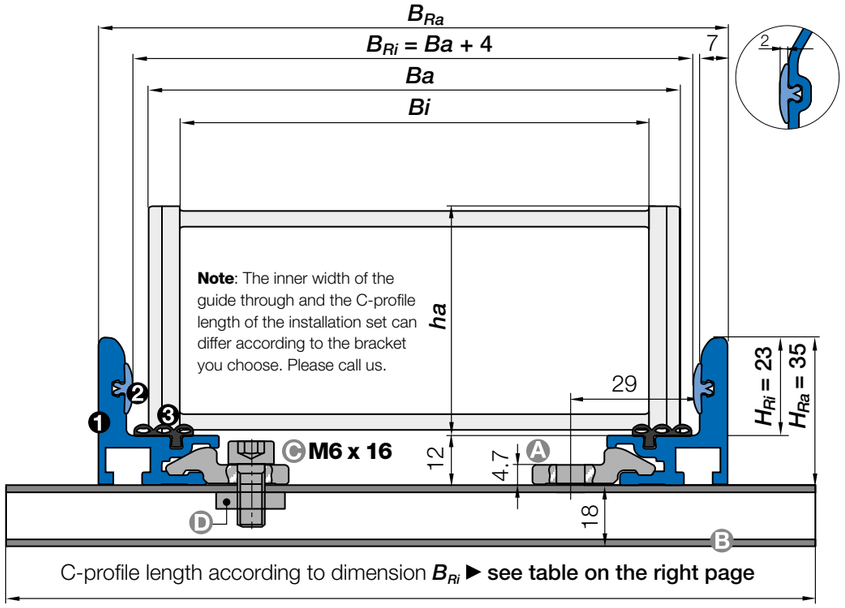

For the following series
E2.1
● E2.26/E2i.26/E2C.26
● E2.38/E2i.38/E2C.38
E2/000
● 2400/2500/2450/2480
● 2600/2700/2650/2680
E4Q
● E4Q.34/H4Q.34
E4.1
● E4.28/R4.28
● E4.32/H4.32/R4.32
E4.1L
● E4.31L/R4.31L
● E4.38L/R4.38L
E6.1
● EF61.29/E61.29
● E61.35
● E61.40
E6
● E6.29
● E6.35
● E6.40/R6.40

Full sets

Trough side parts ❶ | ❷ | ❸	Part No.	Weight
1 set of 2 trough side parts, incl. glide strips, without silencer profile, 2m section	9AT.35.SL	≈ 3.470kg
1 set of 2 trough side parts, incl. glide strips, with silencer profile, 2m section	9AT.35.SLA	≈ 3.714kg
Installation sets Ⓐ | Ⓑ | Ⓒ | Ⓓ	**Part No.**	**Weight**
1 installation set without C-profile	960.30	upon request
1 installation set with C-profile (C-profile length according to dimension B_{Ri})	960AT.30.XXX 1)	upon request

1) Please add the C-profile length XXX as shown on the tables. Example: **Part No. 960AT.30.150**

Individual parts

Components as individual parts, trough	Part No.	Weight
1 trough side part, individual, 2m section	9AT.35.11	≈ 1.673kg
1 glide strip, plastic, individual, 2m section	75.01	≈ 0.062kg
1 Silencer profile, rubber, individual, 2m section (optional for an additional noise dampening)	75.67.H.2000	≈ 0.122kg
Components as individual parts, installation set	**Part No.**	**Weight**
Ⓐ 1 bottom clamp, aluminium individual	75.40	≈ 0.03kg
Ⓑ 1 C-profile, individual (C-profile length according to dimension B_{Ri})	92.52.XXX.E 2)	≈ 0.90kg/m
Ⓒ 1 screw M6 x 16, individual	MAT 0040209 / M6	
Ⓓ 1 glide nut, individual	MAT 0040057 / M6	

2) Please add the C-profile length XXX as shown on the tables. Example: **Part No. 92.52.125.E**. For stainless steel, please add index **.E**.

Option

Additional options for simple fastening without drilling	Part No.
1 set fixed end module - to attach the e-chain® into the aluminium support tray.	▶ Page 545

Order key

9AT.35.SLA

- 9AT = Trough system
- 35 = Support tray
- SL = Outer height
- A = With glide strip
- SL = With silencer profile

960AT.35.125

- 960AT = Installation set
- 35 = Size of bottom clamp
- 125 = Length of C-profile

Order example:
Complete Part No. with the required C-profile length XXX.

C-profile length (according to dimension B_{Ri})

E2.26/E2i.26/E2C.26

Width index	B_{Ri} [mm]	Part No. attached inwards
.077	97	960AT.30.150
.089	109	960AT.30.175
.103	123	960AT.30.175
.125	145	960AT.30.200

E2.38/E2i.38/E2C.38

Width index	B_{Ri} [mm]	Part No. attached inwards
.065	86	960AT.30.150
.075	96	960AT.30.150
.090	111	960AT.30.175
.100	121	960AT.30.175
.125	146	960AT.30.200
.150	171	960AT.30.225
.175	198	960AT.30.250

2400/2500/2450/2480

Width index	B_{Ri} [mm]	Part No. attached inwards
.07	97	960AT.30.150
.09	109	960AT.30.175
.10	123	960AT.30.175
.12	145	960AT.30.200

2600/2700/2650/2680

Width index	B_{Ri} [mm]	Part No. attached inwards
.06	85	960AT.30.150
.07	95	960AT.30.150
.09	110	960AT.30.175
.10	120	960AT.30.175
.12	145	960AT.30.200
.15	170	960AT.30.225
.17	198	960AT.30.250

E4Q.34/H4Q.34

Width index	B_{Ri} [mm]	Part No. attached inwards
.075	102	960AT.30.150
.087	114	960AT.30.175
.100	127	960AT.30.175
.108	135	960AT.30.200
.112	140	960AT.30.200
.125	152	960AT.30.200
.137	165	960AT.30.225
.150	177	960AT.30.225
.162	190	960AT.30.250
.168	195	960AT.30.250
.175	202	960AT.30.250
.187	215	960AT.30.275
.200	227	960AT.30.275
.212	240	960AT.30.300
.225	252	960AT.30.300
.237	265	960AT.30.325
.250	277	960AT.30.325
.262	290	960AT.30.350
.275	302	960AT.30.350
.287	315	960AT.30.375
.300	327	960AT.30.375
.312	340	960AT.30.400
.325	352	960AT.30.400
.337	365	960AT.30.425
.350	377	960AT.30.425
.362	390	960AT.30.450
.375	402	960AT.30.450
.387	415	960AT.30.475
.400	427	960AT.30.475

* Available upon request.

E4.28/R4.28

Width index	B_{Ri} [mm]	Part No. attached inwards
.062	86	960AT.30.150
.070	94	960AT.30.150
.075	99	960AT.30.150
.087	111	960AT.30.175
.100	124	960AT.30.175
.125	149	960AT.30.200
.150	174	960AT.30.225
.175	199	960AT.30.250
.200	224	960AT.30.275
.225	249	960AT.30.300
.250	274	960AT.30.325
.275	299	960AT.30.350
.300	324	960AT.30.375

E4.32/H4.32/R4.32

Width index	B_{Ri} [mm]	Part No. attached inwards
.06	95	960AT.30.150
.07	102	960AT.30.150
.087	114	960AT.30.175
.097	124	960AT.30.175
.10	127	960AT.30.175
.11	135	960AT.30.200
.112	140	960AT.30.200
.12	152	960AT.30.200
.137	165	960AT.30.225
.15	177	960AT.30.225
.162	190	960AT.30.250
.17	195	960AT.30.250
.18	202	960AT.30.250
.187	215	960AT.30.275
.20	227	960AT.30.275
.212	240	960AT.30.300
.23	252	960AT.30.300
.237	265	960AT.30.325
.25	277	960AT.30.325
.262	290	960AT.30.350
.28	302	960AT.30.350
.29	315	960AT.30.375
.30	327	960AT.30.375
.312	340	960AT.30.400
.325	352	960AT.30.400
.337	365	960AT.30.425
.350	377	960AT.30.425
.362	390	960AT.30.450
.375	402	960AT.30.450
.387	415	960AT.30.475
.400	427	960AT.30.475

E4.31L/R4.31L

Width index	B_{Ri} [mm]	Part No. attached inwards
.062	80	960AT.30.150
.075	93	960AT.30.150
.087	105	960AT.30.175
.100	118	960AT.30.175
.112	130	960AT.30.200
.125	143	960AT.30.200
.137*	155	960AT.30.225
.150	168	960AT.30.225
.162	180	960AT.30.250
.175	193	960AT.30.250
.187*	205	960AT.30.275
.200*	218	960AT.30.275

* Available upon request.

E4.38L/R4.38L

Width index	B_{Ri} [mm]	Part No. attached inwards
.062	82	960AT.30.150
.075	95	960AT.30.150
.087	107	960AT.30.175
.100	120	960AT.30.175
.105	125	960AT.30.175
.112	132	960AT.30.200
.125	145	960AT.30.200
.137	157	960AT.30.225
.150	170	960AT.30.225
.162	182	960AT.30.250
.175	195	960AT.30.250
.187	207	960AT.30.275
.200	220	960AT.30.275
.212	232	960AT.30.300
.225	245	960AT.30.300
.237	257	960AT.30.325
.250	270	960AT.30.325
.262	282	960AT.30.325
.275*	295	960AT.30.350
.287*	307	960AT.30.350
.300	320	960AT.30.375

* Available upon request.

EF61.29/E61.29

Width index	B_{Ri} [mm]	Part No. attached inwards
.060	80	960AT.30.150
.070	90	960AT.30.150
.080	100	960AT.30.150
.090	110	960AT.30.175
.100	120	960AT.30.175
.110	130	960AT.30.200
.120	140	960AT.30.200
.140	160	960AT.30.225

E61.35

Width index	B_{Ri} [mm]	Part No. attached inwards
.060	84	960AT.30.150
.070	94	960AT.30.150
.080	104	960AT.30.150
.090	114	960AT.30.175
.100	124	960AT.30.175
.110	134	960AT.30.200
.120	144	960AT.30.200
.140	164	960AT.30.225

E61.40

Width index	B_{Ri} [mm]	Part No. attached inwards
.062	86	960AT.30.150
.070	94	960AT.30.150
.075	99	960AT.30.150
.087	111	960AT.30.175
.100	124	960AT.30.175
.125	149	960AT.30.200
.150	174	960AT.30.225
.175	199	960AT.30.250
.200	224	960AT.30.275
.225	249	960AT.30.300
.250	274	960AT.30.325
.275	299	960AT.30.350
.300	324	960AT.30.375

E6.29/R6.29

Width index	B_{Ri} [mm]	Part No. attached inwards
.060	80	960AT.30.150
.070	90	960AT.30.150
.080	100	960AT.30.150
.090	110	960AT.30.175
.100	120	960AT.30.175
.110	130	960AT.30.200
.120	140	960AT.30.200
.140	160	960AT.30.225

E6.35

Width index	B_{Ri} [mm]	Part No. attached inwards
.060	84	960AT.30.150
.070	94	960AT.30.150
.080	104	960AT.30.150
.090	114	960AT.30.175
.100	124	960AT.30.175
.110	134	960AT.30.200
.120	144	960AT.30.200
.140	164	960AT.30.225

E6.40

Width index	B_{Ri} [mm]	Part No. attached inwards
.062	86	960AT.30.150
.070	94	960AT.30.150
.075	99	960AT.30.150
.087	111	960AT.30.175
.100	124	960AT.30.175
.125	149	960AT.30.200
.150	174	960AT.30.225
.175	199	960AT.30.250
.200	224	960AT.30.275
.225	249	960AT.30.300
.250	274	960AT.30.325
.275	299	960AT.30.350
.300	324	960AT.30.375

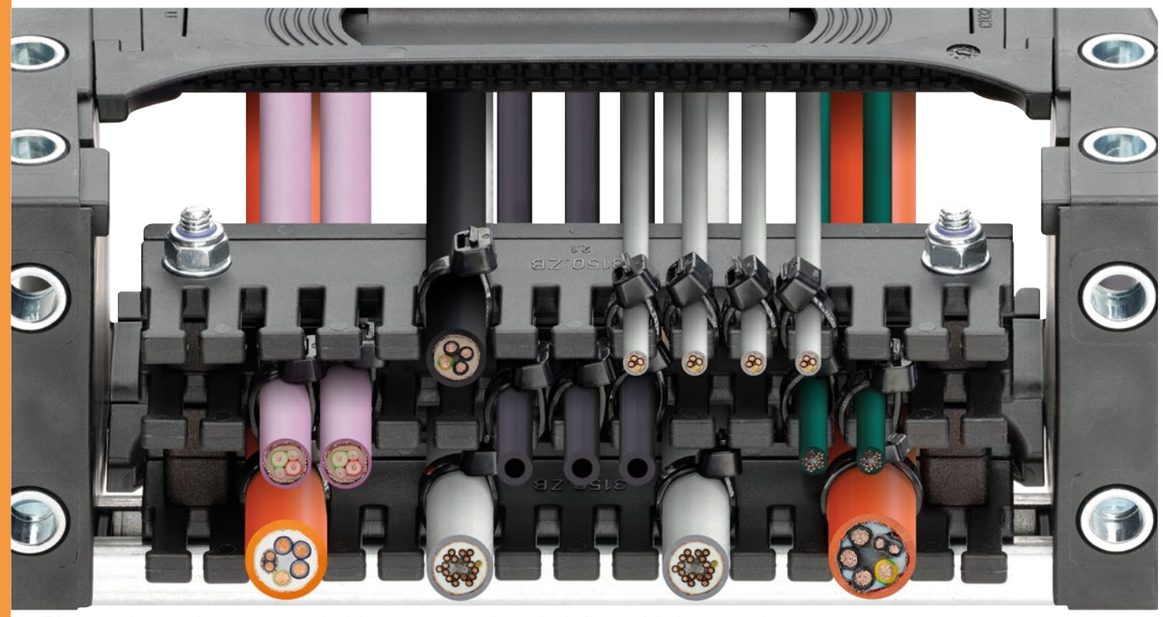

Picture shows the new, stackable, space-saving chainfix multi-tiewrap plates.

igus® chainfix strain relief. Flexible, secure and fast.

Strain relief from igus® is specifically developed for use in e-chains® and dynamic applications. The combination of chainflex® cable materials and the touching plastic components of the chainfix strain relief systems from igus®, have been designed for a long service life of cables and for maximum holding force. For a wide variety of applications, igus® offers the best solution with respect to cost and benefits. Examples are the CFXL clamps for long travels and harsh environments. The clamps for pneumatic hoses for a secure guidance of pneumatic hoses without crushing them. As universal strain relief, multi-tiewrap plates offer various assembly options. When many cables have to be safely strain relieved in a confined space, the stackable multi-tiewrap plates are ideal. igus® chainfix strain relief devices have been tested under real-world conditions and have been used for years by customers all over the world.

Selection table

Part No.	Description	Page
	Clamps - steel and stainless steel for maximum tensile forces	
	CFX standard clamps with standard base	558
	CFXL clamps with wide base for increased holding force	559
	Multi-clamps, universal strain relief	562
	Multi-clamps, larger cable diameters	563
	Strain relief pneumatic hoses without crushing them	564
	Clamps for pneumatic hoses, larger cable diameters	565
	C-profile - standard and for heavy-duty applications	
	Series 92.42 Standard C-profile, can be integrated into KMA	561
	Series 92.52 C-profile for increased holding force, mounting in front of e-chain®	561
	Tiewrap plates - universal, bolted or clip-on	
	Multi-tiewrap plate, stackable, space-saving and flexible with tiewrap plate series 3000	566
	Series 2000 tiewrap plate as an individual part + cable tiewrap	570
	Series 3000 tiewrap plate as an individual part + cable tiewrap	571
	Tiewrap plates variants - optional	
	Option 01: tiewrap plates with clip-on connection to C-profile	572
	Option 02: strain relief tooth for top-hat (DIN) rail 15 (TS92.31)	572
	Option 03: tiewrap plates for fixed crossbars	573
	Option 04: tiewrap plates for openable crossbars	573
	Clip-on solutions - chainfix strain relief	
	Strain relief separators for easy strain relief with cable tiewraps	574
	CFV strain relief elements with tiewrap teeth	576

chainfix strain relief | Introduction

chainfix

Select your strain relief system

e-chain® Series/system	CFX clamp, (incl. multi-clamp and clamp for pneumatic hoses)	CFXL clamp, (incl. multi-clamp and clamp for pneumatic hoses)	Tiewrap plate as an individual part series 2000	Tiewrap plate as an individual part series 3000	Multi-tiewrap plate for C-profile			Option 01 Tiewrap plate with clip-on connection to C-profile	Option 02 Strain relief tooth for top-hat (DIN) rail 15	Option 03 Tiewrap plate for fixed crossbars	Option 04 Tiewrap plate for openable crossbars	Strain relief separator	CFV Stepped strain relief	Tiewrap plate/teeth directly moulded on the mounting bracket
easy chain®														
E03	–	–	–	–	–			–	–	–	–	–	–	X
E04	–	–	–	–	–			–	–	–	–	–	–	X
E/Z045	–	–	–	–	–			–	–	–	–	–	–	X
E/Z06	–	–	–	–	–			–	–	–	–	–	–	X
E/Z065	–	–	–	–	–			–	–	–	–	–	–	X
E/Z08	–	–	–	–	–			–	–	–	–	–	–	X
E/Z14	–	–	–	–	–			–	–	–	–	–	–	X
E/Z200	X [1]	–	2XXX.ZB	–	–			–	–	2050.Z	–	–	–	–
E/Z16	–	–	–	–	–			–	–	–	–	–	–	X
E/Z26	X [1]	–	–	3XXX.ZB	–			–	–	–	–	–	–	–
E/Z300	X [1]	–	–	3XXX.ZB	–			–	–	–	–	–	–	–
E2.1 micro														
03	–	–	–	–	–			–	–	–	–	–	–	X
04	–	–	–	–	–			–	–	–	–	–	–	X
045	–	–	–	–	–			–	–	–	–	–	–	X
E2C.10L	–	–	–	–	–			–	–	–	–	–	–	X
E2.10	–	–	–	–	–			–	–	–	–	–	–	X
E2.15	–	–	–	–	–			–	–	–	–	–	–	X
E2.17	–	–	–	–	–			–	–	–	–	–	–	X
E2.1														
E2.21	X [1]	X [1]	2XXX.ZB	–	–			–	–	–	–	21.1.Z	–	X
E2.26	X [1]	X [1]	2XXX.ZB	–	–			–	–	2050.Z	–	26.Z [2]	–	–
E2.38	X [1]	X [1]	–	3XXX.ZB	X			–	–	C.2.522.XXX.ZS	–	–	CFV.42.C	–
E2i.48	X [1]	X [1]	–	3XXX.ZB	X			–	–	C.2.522.XXX.ZS	–	–	CFV.42.C	–
R2.1														
R2.26	X [1]	X [1]	–	–	–			–	–	–	–	R2.26.Z	CFV.R2.26.Z	–
R2.40	X [1]	X [1]	–	–	–			–	–	–	–	R2.40.Z	CFV.R2.40.Z	–
R2.48	X [1]	X [1]	–	3XXX.ZB	–			30XX.ZC	–	–	–	–	CFV.R2.48.Z	–
R2.75	X [1]	X [1]	–	3XXX.ZB	–			30XX.ZC	–	–	–	–	CFV.80.C	–
E4Q														
E4Q.34/H4Q.34	X	X [1]	–	3XXX.ZB	X			30XX.ZC	–	–	C825.075.ZS	–	CFV.42.C	–
E4Q.44/H4Q.44	X	X [1]	–	3XXX.ZB	X			30XX.ZC	–	–	C825.075.ZS	–	CFV.42.C	–
E4Q.58/H4Q.58	X	X [1]	–	3XXX.ZB	X			30XX.ZC	–	–	C1132.080.ZS	–	CFV.80.C	–
E4Q.82/H4Q.82	X	X [1]	–	3XXX.ZB	X			30XX.ZC	–	–	C1132.080.ZS	–	CFV.80.C	–
E4QL														
E4Q.64L/H4Q.64L	X	X [1]	–	3XXX.ZB	X			30XX.ZC	–	–	C1132.080.ZS	–	CFV.80.C	–
E4.1														
E4.21	X [1]	X [1]	2XXX.ZB	–	–			–	–	–	–	T2103.Z	–	–
E4.28/R4.28	X [1]	X [1]	2XXX.ZB	–	–			–	–	–	2050.Z	28.Z / 28.ZT	–	–
E4.32/H4.32/R4.32	X	X [1]	–	3XXX.ZB	X			30XX.ZC	–	–	38XX.ZS	–	CFV.42.C	–
E4.42/H4.42/R4.42	X	X [1]	–	3XXX.ZB	X			30XX.ZC	–	–	38XX.ZS	–	CFV.42.C	–
E4.56/H4.56/R4.56	X	X [1]	–	3XXX.ZB	X			30XX.ZC	–	–	45XX.ZS	–	CFV.80.C	–
E4.80/H4.80/R4.80	X	X [1]	–	3XXX.ZB	X			30XX.ZC	–	–	45XX.ZS	–	CFV.80.C	–
E4.112	X [1]	X [1]	–	3XXX.ZB	X			–	–	–	45XX.ZS	–	–	–
E4.162	X [1]	X [1]	–	3XXX.ZB	X			–	–	–	–	–	–	–
800	X [1]	X [1]	–	3XXX.ZB	X			–	–	–	–	–	–	–
840	X [1]	–	–	–	–			–	–	–	–	–	–	–

1) Assemble before the mounting bracket (CFXL clamps are always assembled before the mounting bracket in a separate C-profile 92.52.XXX)
2) For KMA mounting bracket only
= Recommended strain relief for selected e-chain®

Available from stock
Upon request

Select your strain relief system

e-chain® Series/system	CFX clamp, (incl. multi-clamp and clamp for pneumatic hoses)	CFXL clamp, (incl. multi-clamp and clamp for pneumatic hoses)	Tiewrap plate as an individual part series 2000	Tiewrap plate as an individual part series 3000	Multi-tiewrap plate for C-profile			Option 01 Tiewrap plate with clip-on connection to C-profile	Option 02 Strain relief tooth for top-hat (DIN) rail 15	Option 03 Tiewrap plate for fixed crossbars	Option 04 Tiewrap plate for openable crossbars	Strain relief separator	CFV Stepped strain relief	Tiewrap plate/teeth directly moulded on the mounting bracket
E4.1L														
E4.31L/R4.31L	X [1]	X [1]	–	–	–			2010.ZH	2010.ZH	–	–	31.Z	CFV.31.N15	–
E4.38L/R4.38L	X	X [1]	–	3XXX.ZB	X			30XX.ZC	–	–	C622.100.ZS	38.Z	CFV.42.C	–
E4.48L/R4.48L	X	X [1]	–	3XXX.ZB	X			30XX.ZC	–	–	C622.100.ZS	48.Z / 48.ZS	CFV.42.C	–
E4.64L	X	X [1]	–	3XXX.ZB	X			30XX.ZC	–	–	–	–	CFV.80.C	–
E4/light														
14040/14140/18840	X	X [1]	–	3XXX.ZB	X			30XX.ZC	–	–	45XX.ZS	–	–	–
14240/14340	X	X [1]	–	3XXX.ZB	X			30XX.ZC	–	–	38XX.ZS	–	–	–
14550/14650/19050	X	X [1]	–	3XXX.ZB	X			30XX.ZC	–	–	45XX.ZS	–	–	–
15050/15150/19850	X	X [1]	–	3XXX.ZB	X			30XX.ZC	–	–	45XX.ZS	–	–	–
15250/15350	X	X [1]	–	3XXX.ZB	X			30XX.ZC	–	–	38XX.ZS	–	–	–
1640/R1608	X	X [1]	–	3XXX.ZB	X			–	–	–	45XX.ZS	–	–	–
YE														
YE.42/YR.42	X [1]	X [1]	–	–	–			–	–	–	38XX.ZS	–	–	–
YE.56/YR.46	X [1]	X [1]	–	–	–			–	–	–	45XX.ZS	–	–	–
YEHD														
YEHD.108/YRHD.108	X [1]	X [1]	–	–	–			–	–	–	45XX.ZS	–	–	–
YEHD.112	X [1]	X [1]	–	–	–			–	–	–	45XX.ZS	–	–	–
e-skin® corrugated tubes														
SKS20	X [1]	X [1]	–	–	–			–	–	–	–	–	–	X
SKS24	X [1]	X [1]	SK24.2000.ZB	–	–			–	–	–	–	–	–	–
SKS28/SK28	X [1]	X [1]	SK28.2000.ZB	–	–			–	–	–	–	–	–	–
SKS40/SK40	X [1]	X [1]	SK40.2000.ZB	–	–			–	–	–	–	–	–	–
C6														
C6.29	X [1]	X [1]	–	–	–			–	–	–	–	C6.29.5.Z	–	–
C6.38	X [1]	X [1]	–	–	–			–	–	–	–	C6.38.5.Z	–	–
C6.53	X	X	–	–	X			30XX.ZC	–	–	–	–	CFV.42.C	–
E6														
E6.29	X [1]	X [1]	2XXX.ZB	–	–			–	–	–	–	E6.29.02.Z	–	–
R6.29	X [1]	X [1]	2XXX.ZB	–	–			–	–	–	–	–	–	–
E6.35	X [1]	X [1]	2XXX.ZB	–	–			–	–	–	–	E6.35.02.Z	–	–
E6.40	X	X [1]	2XXX.ZB	–	X			–	–	–	–	E6.40.02.Z	CFV.42.C	–
E6.52	X	X [1]	–	3XXX.ZB	X			30XX.ZC	–	–	2050.Z	–	CFV.42.C	–
R6.52	X	X [1]	–	3XXX.ZB	X			30XX.ZC	–	–	–	–	CFV.42.C	–
E6.62	X	X [1]	–	3XXX.ZB	X			30XX.ZC	–	–	38XX.ZS	–	CFV.80.C	–
E6.80L/E6.80	X	X [1]	–	3XXX.ZB	X			30XX.ZC	–	–	45XX.ZS	–	CFV.80.C	–

1) Assemble before the mounting bracket (CFXL clamps are always assembled before the mounting bracket in a separate C-profile 92.52.XXX)
2) For KMA mounting bracket only
■ = Recommended strain relief for selected e-chain®

Available from stock
Upon request

chainfix strain relief | Introduction

Select your strain relief system

Available from stock
Upon request

chainfix strain relief | Parameters

Overview | chainfix strain relief systems

Product				
				
igus® chainfix strain relief	**CFX and CFXL clamps**	**Tiewrap plates - bolted, clip-on, stackable**	**Strain relief separators**	**CFV - strain relief element**
Recommended standard for the following e-chains®:	**E2.1, E4Q, E4.1, E4.1L, E4/light, C6, E6, for all KMA with C-profile**	**E2.1, E4Q, E4.1, E4.1L, E4/light, C6, E6,**	**E2.1/R2.1, E4.1/R4.1, E4.1L/R4.1L, C6, E6/R6**	**E2.1, E4Q, E4Q.L, E4.1, E4.1L, E4/light, C6, E6/R6**
When to use this strain relief?	Standard for high accelerations, loads and demanding applications. For many cables, large cable diameters and stacked cables. For long travels, cranes, offshore, machine tools, high speeds and hydraulic cables. Also available as universal multi-clamps and clamps for pneumatic hoses	Standard for many applications at medium and low accelerations. For unsupported, gliding, hanging and standing applications in general machinery and machine tools. When many cables have to be safely strain relieved in a confined space, the stackable multi-tiewrap plates with intuitive design are ideal. Also available as an individual part, for example in control cabinets.	Combination of separator and strain relief, ideal for small spaces. For applications with medium accelerations. For small cable diameters. Ideal for e-tubes. For machine tools and automation.	For both in e-chains® and e-tubes. Stepped strain relief for use outside of the e-chain® cross section - even with different connectors. Easy to retrofit. Simple installation into top-hat (DIN) rail 15 (TS92.31) or C-profile on KMA mounting brackets.
When not to use it:	**No limitation**	**For large cable diameters**	**For high loads**	**For high loads**
Properties				
Assembly time index	+	+	+	++
Definable tensile strength	++	–	–	–
Price index	●●◐	●○○	●○○	●○○
Modularity	yes	yes	yes	yes
Dynamics	high to very high	high	high	medium

Price index

- ◐○○ low price category
- ●◐○ medium price category
- ●●● highest price category

+++ = best suitability
\+ = good suitability
+ – = suitable
– = limited suitability

Available from stock
Upon request

chainfix strain relief | Parameters

Overview | chainfix strain relief systems

Available from stock
Upon request

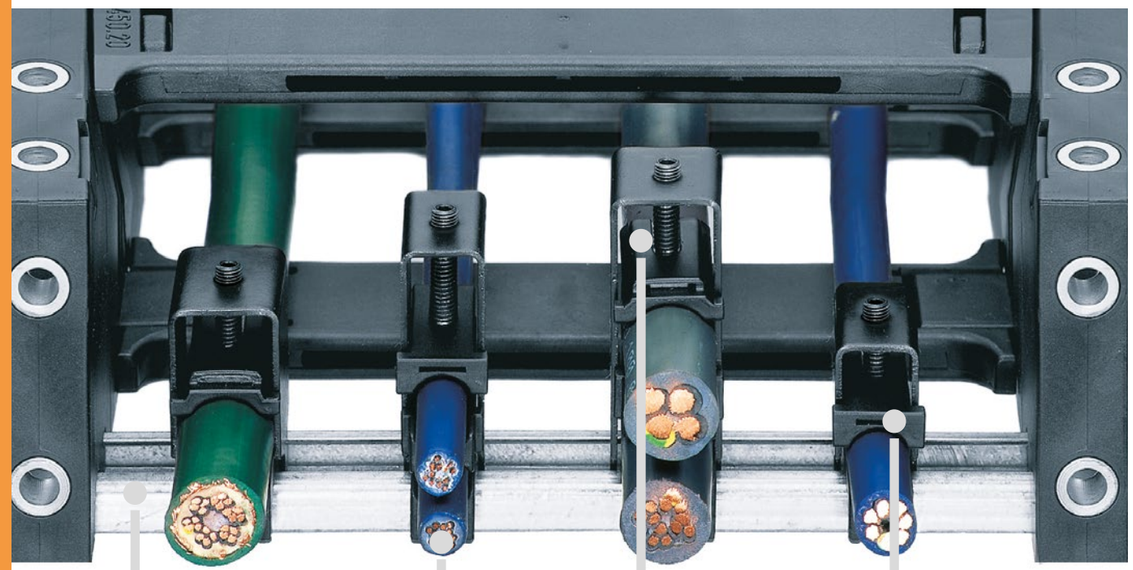

Can be integrated into igus® KMA mounting bracket

For up to three cables stacked above one another

Reduced installation height, space-saving

High strength for dynamic applications

chainfix clamps - fitted quickly and securely

- Sizes for cable diameters 42-46mm and 46-50mm are also available
- Tested: up to 3.5 times higher force absorption compared to conventional clamps
- Space and time-saving assembly
- Delivery options for complete systems with cables and pre-assembled strain relief
- Improved base for easier fit into the C-profile
- Simple assembly with threaded pins screwed with an Allen wrench
- Durability for dynamic applications with improved stacker elements
- Integrated ribs on the stacker elements prevent the cables from coming loose from the strain relief
- Optional: CFXL clamps for increased holding force for heavy-duty applications
- CFX clamps with special stacker saddles for strain relief of pneumatic hoses without crushing them or reducing the cross-section



CFX/CFXL clamps.



Multi-clamps.



Clamps for pneumatic hoses.

General information

Product range and materials

- Steel clamp: clamp and screw black painted steel
- Stainless steel clamp: clamp and screw: blank (material 1.4301/AISI 304)
- Stacker elements: bottom saddle and stacker saddle (igumid® G LW material)
- Steel C-profile available (material galvanised steel)
- Stainless steel C-profile available (material 1.4301/AISI 304)

Installation height

If the e-chain® glides on itself for long travels, the screw heads of the strain relief at the fixed end of the e-chain® must have a distance of at least 10mm from the top of the e-chain®. As a result, many strain relief elements described here may not be suitable for use at the fixed end on long gliding e-chains®. For unsupported e-chains® strain relief elements can always be safely used.

For the following series
E2.1
● E2.38
● E2.48
E4Q
● E4Q.34/H4Q.34
● E4Q.44/H4Q.44
● E4Q.58/H4Q.58
● E4Q.82/H4Q.82
E4.1
● E4.32/H4.32/R4.32
● E4.42/H4.42/R4.42
● E4.56/H4.56/R4.56
● E4.80/H4.80/R4.80
● E4.112/R4.112
● E4.162
E4.1L
● E4.38L/R4.38L
● E4.48L/R4.48L
● E4.64L
E4/light
● 14040/14140/18840
● 14240/14340
● 14550/14650/19050
● 15050/15150/19850
● 15250/15350
E6 / C6
● E6.40
● E6.52/R6.52
● C6.53
● E6.62
● E6.80L
● E6.80
YE
● YE.42
● YE.56
● YEHD.108
● YEHD.112/YRHD.108

Please note:

- The cables should ideally be fixed at both ends of the e-chain®. **As a minimum they need to be attached at the moving end of the e-chain®!**
- When using chainfix clamps on C-profiles in the mounting bracket for the series E4Q.34/H4Q.34, E4.32/H4.32/R4.32, E4.38L/R4.38L , a shortened bottom saddle must be used. For shortened bottom saddles, please add the part number with index **K**. Example: **Part No. CFX12.1K**

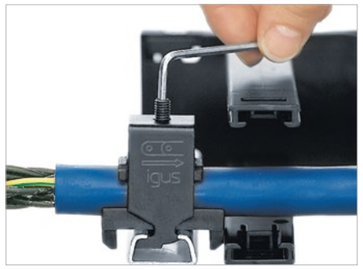

Reduced installation height due to threaded pin and optimal housing height.



Save both time and space during installation with igus® chainfix clamps.

Available from stock
Upon request

Strain relief | CFX clamps

Product range | Series CFX | Standard clamps with standard base

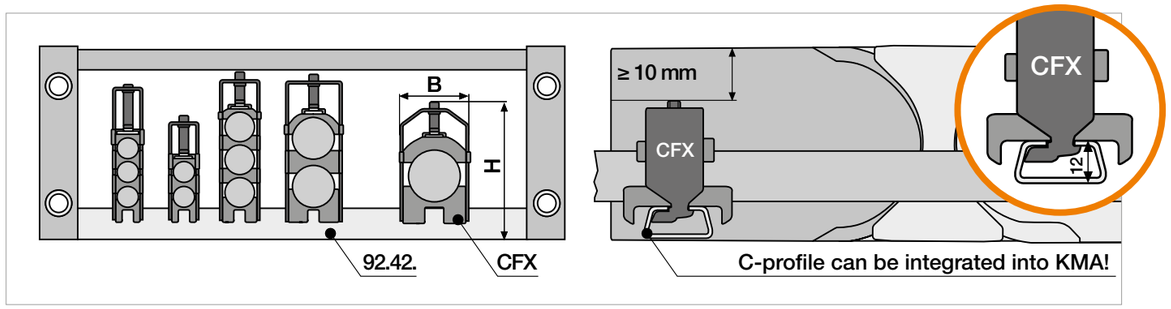

Suitable for C-profile 92.42.XXX - can be integrated into KMA with C-profile option.

Single clamp housing, incl. bottom saddle

Part No. Steel	Part No. Stainless steel*	≤ ø [mm]	B+2 [mm]	H [mm]
CFX12.1	CFX12.1.E	06 - 12	16	54
CFX14.1	CFX14.1.E	12 - 14	18	50
CFX16.1	CFX16.1.E	14 - 16	20	52
CFX18.1	CFX18.1.E	16 - 18	22	54
CFX20.1	CFX20.1.E	18 - 20	24	56
CFX22.1	CFX22.1.E	20 - 22	26	58
CFX26.1	CFX26.1.E	22 - 26	30	67

Part No. Steel	Part No. Stainless steel*	≤ ø [mm]	B+2 [mm]	H [mm]
CFX30.1	CFX30.1.E	26 - 30	34	71
CFX34.1	CFX34.1.E	30 - 34	38	75
CFX38.1	CFX38.1.E	34 - 38	42	79
CFX42.1	CFX42.1.E	38 - 42	46	83
CFX46.1	CFX46.1.E	42 - 46	51	115
CFX50.1	CFX50.1.E	46 - 50	55	121

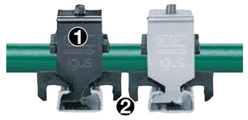

❶ Clamp
❷ Bottom saddle
❸ Stacker saddle

Double clamp housing, incl. bottom and stacker saddles

Part No. Steel	Part No. Stainless steel*	≤ ø [mm]	B+2 [mm]	H [mm]
CFX12.2	CFX12.2.E	06 - 12	16	72
CFX14.2	CFX14.2.E	12 - 14	18	74
CFX16.2	CFX16.2.E	14 - 16	20	78
CFX18.2	CFX18.2.E	16 - 18	22	82
CFX20.2	CFX20.2.E	18 - 20	24	86

Part No. Steel	Part No. Stainless steel*	≤ ø [mm]	B+2 [mm]	H [mm]
CFX22.2	CFX22.2.E	20 - 22	26	90
CFX26.2	CFX26.2.E	22 - 26	30	109
CFX30.2	CFX30.2.E	26 - 30	34	117
CFX34.2	CFX34.2.E	30 - 34	38	125



Triple clamp housing, incl. bottom and stacker saddles

Part No. Steel	Part No. Stainless steel*	≤ ø [mm]	B+2 [mm]	H [mm]
CFX12.3	CFX12.3.E	06 - 12	16	100
CFX14.3	CFX14.3.E	12 - 14	18	96
CFX16.3	CFX16.3.E	14 - 16	20	102

Part No. Steel	Part No. Stainless steel*	≤ ø [mm]	B+2 [mm]	H [mm]
CFX18.3	CFX18.3.E	16 - 18	22	108
CFX20.3	CFX20.3.E	18 - 20	24	114
CFX22.3	CFX22.3.E	20 - 22	26	120

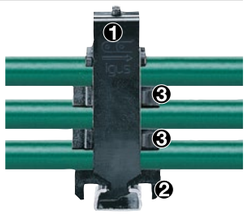

Note: The **H** dimension in the tables is based on the maximum cable diameter. Cables with smaller diameters may result in lower overall clamp housing heights. Tightening torque for CFX clamps 1.5Nm.
*Stainless steel material: 1.4301/AISI 304

Available from stock
Upon request

Strain relief | CFXL clamps

Product range | Series CFXL | Clamps with wide base for increased holding force

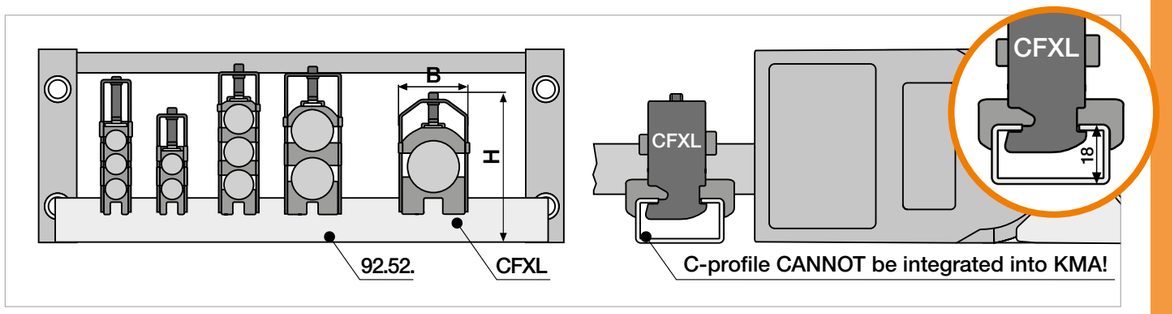

Suitable for C-profile 92.52.XXX - always assembled before the energy chain. Cannot be integrated into KMA!

Single clamp housing, incl. bottom saddle

Part No. Steel	Part No. Stainless steel*	≤ ø [mm]	B+2 [mm]	H [mm]
CFXL12.1	CFXL12.1.E	06 - 12	16	60
CFXL14.1	CFXL14.1.E	12 - 14	18	56
CFXL16.1	CFXL16.1.E	14 - 16	20	58
CFXL18.1	CFXL18.1.E	16 - 18	22	60
CFXL20.1	CFXL20.1.E	18 - 20	24	62
CFXL22.1	CFXL22.1.E	20 - 22	26	64
CFXL26.1	CFXL26.1.E	22 - 26	30	73

Part No. Steel	Part No. Stainless steel*	≤ ø [mm]	B+2 [mm]	H [mm]
CFXL30.1	CFXL30.1.E	26 - 30	34	77
CFXL34.1	CFXL34.1.E	30 - 34	38	81
CFXL38.1	CFXL38.1.E	34 - 38	42	85
CFXL42.1	CFXL42.1.E	38 - 42	46	89
CFXL46.1	CFXL46.1.E	42 - 46	51	122
CFXL50.1	CFXL50.1.E	46 - 50	55	125

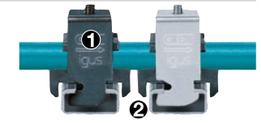

❶ Clamp
❷ Bottom saddle
❸ Stacker saddle

Double clamp housing, incl. bottom and stacker saddles

Part No. Steel	Part No. Stainless steel*	≤ ø [mm]	B+2 [mm]	H [mm]
CFXL12.2	CFXL12.2.E	06 - 12	16	78
CFXL14.2	CFXL14.2.E	12 - 14	18	80
CFXL16.2	CFXL16.2.E	14 - 16	20	84
CFXL18.2	CFXL18.2.E	16 - 18	22	86
CFXL20.2	CFXL20.2.E	18 - 20	24	92

Part No. Steel	Part No. Stainless steel*	≤ ø [mm]	B+2 [mm]	H [mm]
CFXL22.2	CFXL22.2.E	20 - 22	26	86
CFXL26.2	CFXL26.2.E	22 - 26	30	115
CFXL30.2	CFXL30.2.E	26 - 30	34	123
CFXL34.2	CFXL34.2.E	30 - 34	38	131

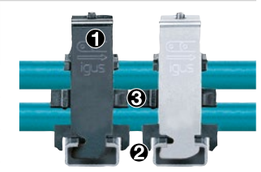

Triple clamp housing, incl. bottom and stacker saddles

Part No. Steel	Part No. Stainless steel*	≤ ø [mm]	B+2 [mm]	H [mm]
CFXL12.3	CFXL12.3.E	06 - 12	16	106
CFXL14.3	CFXL14.3.E	12 - 14	18	102
CFXL16.3	CFXL16.3.E	14 - 16	20	108

Part No. Steel	Part No. Stainless steel*	≤ ø [mm]	B+2 [mm]	H [mm]
CFXL18.3	CFXL18.3.E	16 - 18	22	114
CFXL20.3	CFXL20.3.E	18 - 20	24	120
CFXL22.3	CFXL22.3.E	20 - 22	26	126

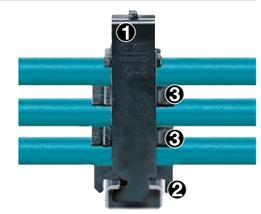

Note: The **H** dimension in the tables is based on the maximum cable diameter. Cables with smaller diameters may result in lower overall clamp housing heights. Tightening torque for CFX clamps 1.5Nm.
*Stainless steel material: 1.4301/AISI 304

Available from stock
Upon request

Strain relief | CFX clamps

Product range | Stacker elements

Stacker elements for CFX and CFXL clamps

- Built-in ribs for secure grip on cables
- Optimised stacker saddles, captive by ❶ locking spring and with ❷ spring groove for a simplified and precise installation
- Conventional stacker saddle
- Long contact surface improves the clamp's stability
- Significantly more secure due to high rigidity



Part No. CGXX Bottom saddle	Part No. CDXX Stacker saddle	Part No. CDXX.C Stacker saddle	For clamp	≤ ø [mm]
CG12	CD12	CD.12.C	CFX/CFXL12.X	06 - 12
CG14	CD14	CD.14.C	CFX/CFXL14.X	12 - 14
CG16	CD16	CD.16.C	CFX/CFXL16.X	14 - 16
CG18	CD18	CD.18.C	CFX/CFXL18.X	16 - 18
CG20	CD20	CD.20.C	CFX/CFXL20.X	18 - 20
CG22	CD22	CD.22.C	CFX/CFXL22.X	20 - 22
CG26	CD26	CD.26.C	CFX/CFXL26.X	22 - 26
CG30	CD30	CD.30.C	CFX/CFXL30.X	26 - 30
CG34	CD34	CD.34.C	CFX/CFXL34.X	30 - 34
CG38	–	–	CFX/CFXL38.X	34 - 38
CG42	–	–	CFX/CFXL42.X	38 - 42

Note: When using chainfix clamps on C-profiles in the mounting bracket for the series E4.38L/R4.38L, E4Q.34/H4Q.34, E4.32/H4.32/R4.32, a shortened bottom saddle must be used.
For shortened bottom saddles, please add the part number with index **K**. Example: **Part No. CFX12.1K**

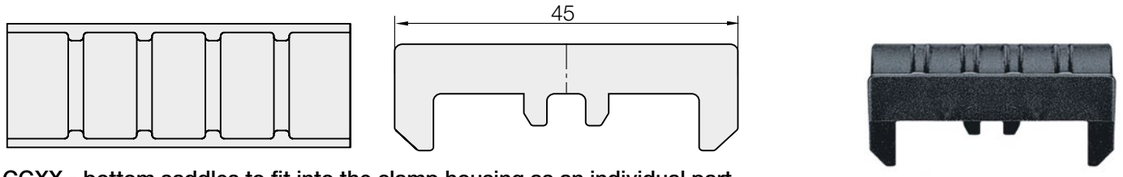

CGXX - bottom saddles to fit into the clamp housing as an individual part.

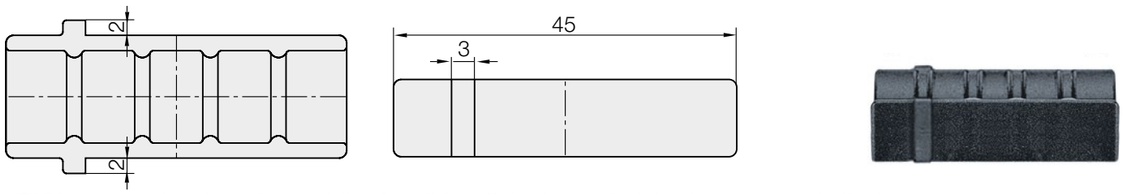

CDXX - conventional stacker saddles for all for all double and triple clamps as an individual part.

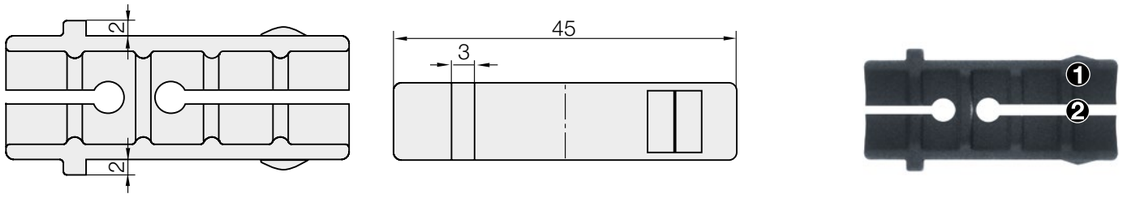

CD.XX.C - optimised stacker saddles for all double and triple clamps as an individual part.

For standard applications | For heavy-duty applications

Standard C-profile Part No. 92.42.XXX - for standard applications

- For all igus® CFX clamps
- Can be integrated into KMA with C-profile option
- Standard material: galvanised steel. Also available as stainless steel version*
- Length tolerances for C-profiles of ±1mm possible!

Complete Part No. with the required length XXX in mm. Example: **92.42.075** for 75mm.

*For stainless steel material AISI 304, please add index .E. Example: **92.42.075.E**.

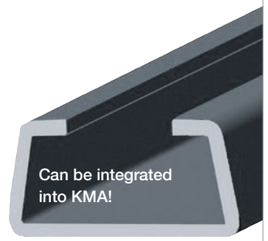

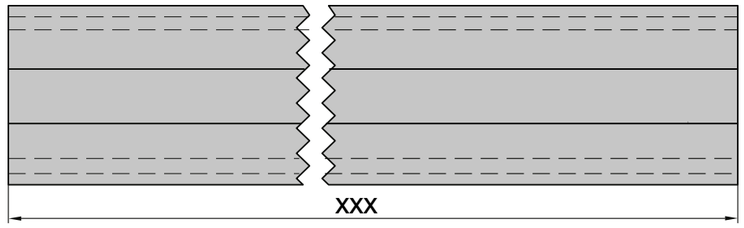

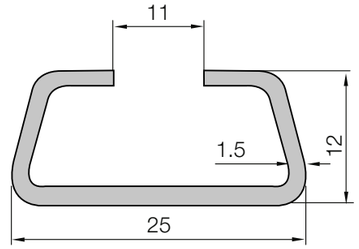

C-profile Part No. 92.52.XXX - for heavy-duty applications

- For all igus® CFXL clamps, for increased holding force
- Always assembled in front of the e-chain® - cannot be integrated into KMA!
- Standard material: galvanised steel. Also available as stainless steel version*
- Length tolerances for C-profiles of ±5mm possible!

Complete Part No. with the required length XXX in mm. Example: **92.52.075** for 75mm.

*For stainless steel material AISI 304, please add index .E. Example: **92.52.075.E**.



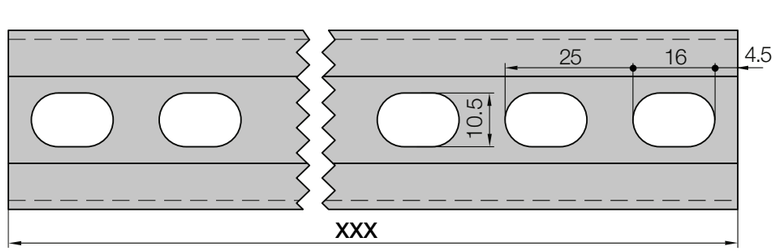

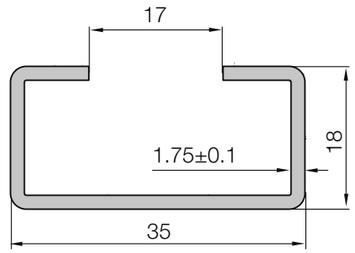

More modular options of the igus® chainfix strain relief system:

- Multi-clamps as universal strain relief for various assembly options, **page 562**
- Clamps for strain relief of pneumatic hoses without crushing them or reducing the cross-section, **page 564**



Product range | Stacker saddles for CFX and CFXL multi-clamps

Stacker saddles for CFX- / CFXL12.X

- For cable diameters from 6mm to 12mm
- More modular options of the proven igus® chainfix strain relief system
- Universal strain relief for various assembly options
- Save both time and space during installation
- Cost-effective, compact and modular



Part No. Individual parts stacker saddles	CDA.4/4-8	CD4/4	CD.4/4-8	CD12	≤ ø [mm]
CFX12.1.Z1 / CFXL12.1.Z1	2 x	–	–	–	6
CFX12.2.Z1 / CFXL12.2.Z1	2 x	1 x	–	–	6
CFX12.2.Z2 / CFXL12.2.Z2	1 x	–	1 x	–	6 + 12
CFX12.2.Z3 / CFXL12.2.Z3	–	–	2 x	–	6 + 8
CFX12.3.Z1 / CFXL12.3.Z1	2 x	3 x	–	–	6
CFX12.3.Z2 / CFXL12.3.Z2	1 x	2 x	1 x	–	6 + 12
CFX12.3.Z3 / CFXL12.3.Z3	1 x	–	1 x	1 x	6 + 12
CFX12.3.Z4 / CFXL12.3.Z4	–	1 x	2 x	–	6 + 10

Standard material: galvanised steel. For the stainless steel version (material 1.4301/AISI 304), please add the part number with index **.E**. Example: **Part No. CFX.12.3.Z1.E**.

CFX12.1.Z1 CFXL12.1.Z1 | CFX12.2.Z1 CFXL12.2.Z1 | CFX12.2.Z2 CFXL12.2.Z2 | CFX12.2.Z3 CFXL12.2.Z3 | CFX12.3.Z1 CFXL12.3.Z1 | CFX12.3.Z2 CFXL12.3.Z2 | CFX12.3.Z3 CFXL12.3.Z3 | CFX12.3.Z4 CFXL12.3.Z4

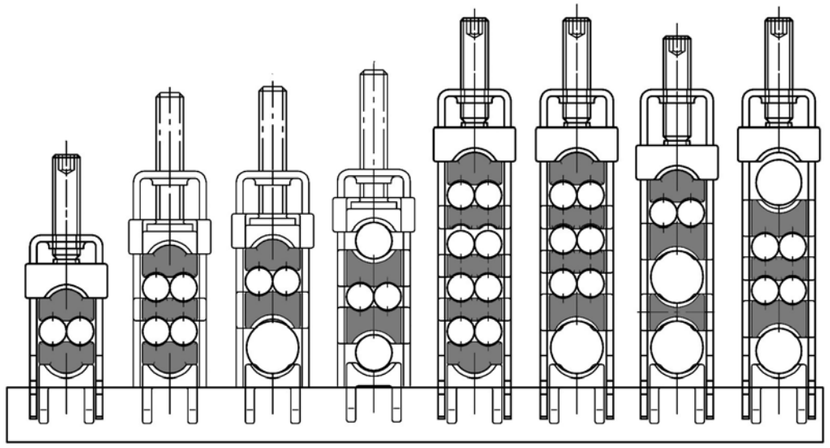

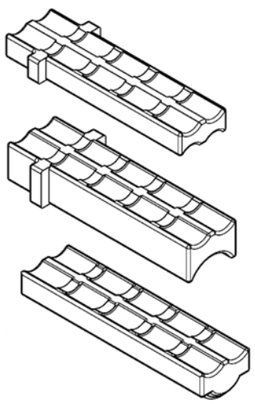

CFX12 / CFXL12 - multi-clamps, max. cable diameter 6mm to 12 mm.

Available from stock
Upon request

Product range | Stacker saddles for CFX and CFXL multi-clamps

Stacker saddles for CFX- / CFXL16.Z

- For cable diameters from 8mm to 16mm
- Very versatile, infinite assembly options
- CFX standard clamps with standard base
- Optional CFXL clamps with wide base for increased holding force available
- Save both time and space during installation
- Cost-effective, compact and modular



Part No. Individual parts stacker saddles	CDA.8/8-16	CD.8/8	CD.8/8-16	CD.16	≤ ø [mm]
CFX16.1.Z1 / CFXL16.1.Z1	2 x	–	–	–	8
CFX16.2.Z1 / CFXL16.2.Z1	2 x	1 x	–	–	8
CFX16.2.Z2 / CFXL16.2.Z2	1 x	–	1 x	–	8 + 16
CFX16.2.Z3 / CFXL16.2.Z3	–	–	2 x	–	8 + 15
CFX16.2.Z4 / CFXL16.2.Z4	–	1 x	2 x	–	8 + 10
CFX16.3.Z1 / CFXL16.3.Z1	2 x	3 x	–	–	8
CFX16.3.Z2 / CFXL16.3.Z2	1 x	3 x	1 x	–	8 + 16
CFX16.3.Z3 / CFXL16.3.Z3	1 x	1 x	2 x	1 x	8 + 16

Standard material: galvanised steel. For the stainless steel version (material 1.4301/AISI 304), please add the part number with index **.E**. Example: **Part No. CFX.16.3.Z1.E**.

CFX16.1.Z1 CFXL16.1.Z1 | CFX16.2.Z1 CFXL16.2.Z1 | CFX16.2.Z2 CFXL16.2.Z2 | CFX16.2.Z3 CFXL16.2.Z3 | CFX16.2.Z4 CFXL16.2.Z4 | CFX16.3.Z1 CFXL16.3.Z1 | CFX16.3.Z2 CFXL16.3.Z2 | CFX16.3.Z3 CFXL16.3.Z3

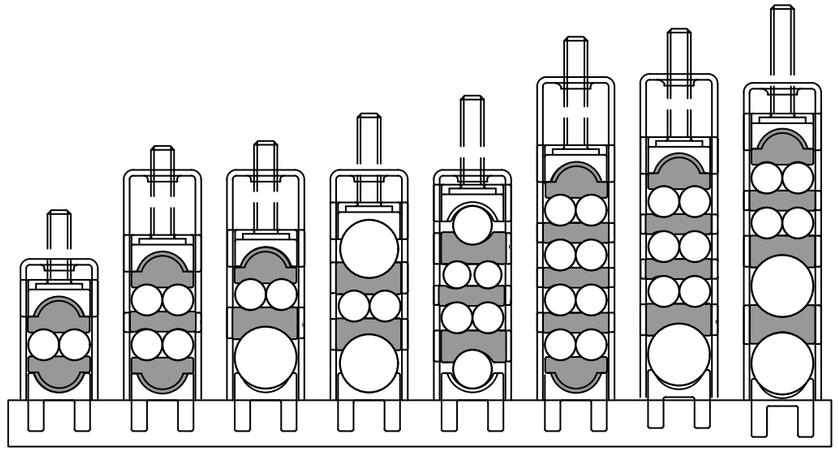

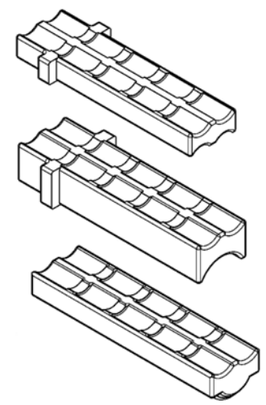

CFX16 / CFXL16 - multi-clamps, max. cable diameter 8mm to 16mm.

Available from stock
Upon request

Product range | Pneumatic stacker saddles for CFX and CFXL clamps

Pneumatic stacker saddles for CFX- / CFXL12 clamps

- For hose diameters 4 and 8mm
- With these options, the CFX and CFXL clamps can be specifically used for pneumatic hoses
- Pneumatic hoses are held securely without being crushed
- Infinite assembly options
- Cost-effective, compact and modular



Part No. Individual parts stacker saddles	CDA.4 / 4-12.P	CD.4 / 4.P	CDA.8 / 12.P	CD.8 / 8.P	≤ ø [mm]
CFX12.1.P4.1 / CFXL12.1.P4.1	2 x	–	–	–	4
CFX12.2.P4.1 / CFXL12.2.P4.1	2 x	1 x	–	–	4
CFX12.2.P4.2 / CFXL12.2.P4.2	2 x	2 x	–	–	4
CFX12.2.P4.3 / CFXL12.2.P4.3	2 x	3 x	–	–	4
CFX12.1.P8.1 / CFXL12.1.P8.1	–	–	2 x	–	8
CFX12.2.P8.1 / CFXL12.2.P8.1	–	–	2 x	1 x	8
CFX12.3.P8.1 / CFXL12.3.P8.1	–	–	2 x	2 x	8
CFX12.3.P8.2 / CFXL12.3.P8.2	–	–	2 x	3 x	8

Standard material: galvanised steel. For the stainless steel version (material 1.4301/AISI 304), please add the part number with index **.E**. Example: **Part No. CFX.12.3.P8.2.E**.

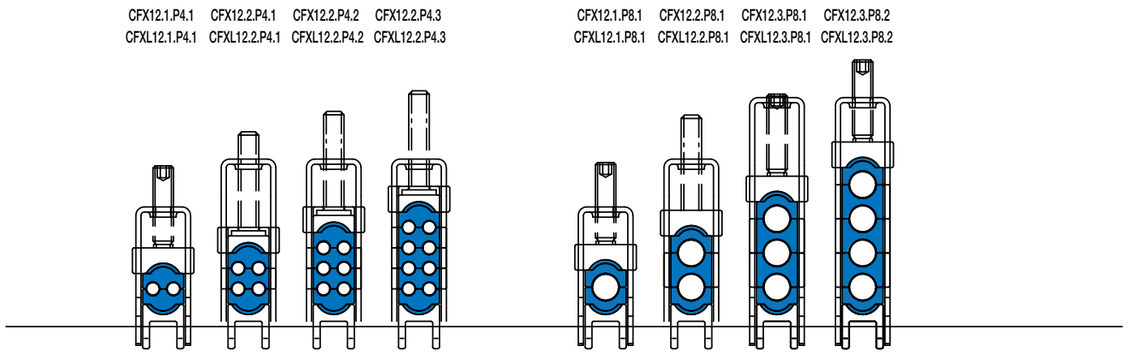

CFX12 - with pneumatic stacker saddles, cable diameter 6mm / 10mm / 12mm.

Available from stock
Upon request

Product range | Pneumatic stacker saddles for CFX and CFXL clamps

Pneumatic stacker saddles for CFX- / CFXL.16 clamps

- For hose diameters 6, 10 and 12mm
- With these options, the CFX and CFXL clamps can be specifically used for pneumatic hoses
- Pneumatic hoses are held securely without being crushed
- Infinite assembly options
- Cost-effective, compact and modular



Part No. Individual parts stacker saddles	CDA.6 / 6-16.P	CD.6 / 6.P	CDA.10-16.P	CD.10 / 10.P	CDA.12-16.P	CD.12 / 12.P	≤ ø [mm]
CFX16.1.P6.1 / CFXL16.1.P6.1	2 x	–	–	–	–	–	6
CFX16.2.P6.1 / CFXL16.2.P6.1	2 x	1 x	–	–	–	–	6
CFX16.2.P6.2 / CFXL16.2.P6.2	2 x	2 x	–	–	–	–	6
CFX16.3.P6.1 / CFXL16.3.P6.1	2 x	4 x	–	–	–	–	6
CFX16.1.P10.1 / CFXL16.1.P10.1	–	–	2 x	–	–	–	10
CFX16.2.P10.1 / CFXL16.2.P10.1	–	–	2 x	1 x	–	–	10
CFX16.2.P10.2 / CFXL16.2.P10.2	–	–	2 x	2 x	–	–	10
CFX16.3.P10.1 / CFXL16.3.P10.1	–	–	2 x	3 x	–	–	10
CFX16.3.P10.2 / CFXL16.3.P10.2	–	–	2 x	4 x	–	–	10
CFX16.1.P12.1 / CFXL16.1.P12.1	–	–	–	–	2 x	–	12
CFX16.2.P12.1 / CFXL16.2.P12.1	–	–	–	–	2 x	1 x	12
CFX16.3.P12.1 / CFXL16.3.P12.1	–	–	–	–	2 x	2 x	12
CFX16.3.P12.2 / CFXL16.3.P12.2	–	–	–	–	2 x	3 x	12

Standard material: galvanised steel. For the stainless steel version (material 1.4301/AISI 304), please add the part number with index **.E**. Example: **Part No. CFX.16.3.P12.2.E**.

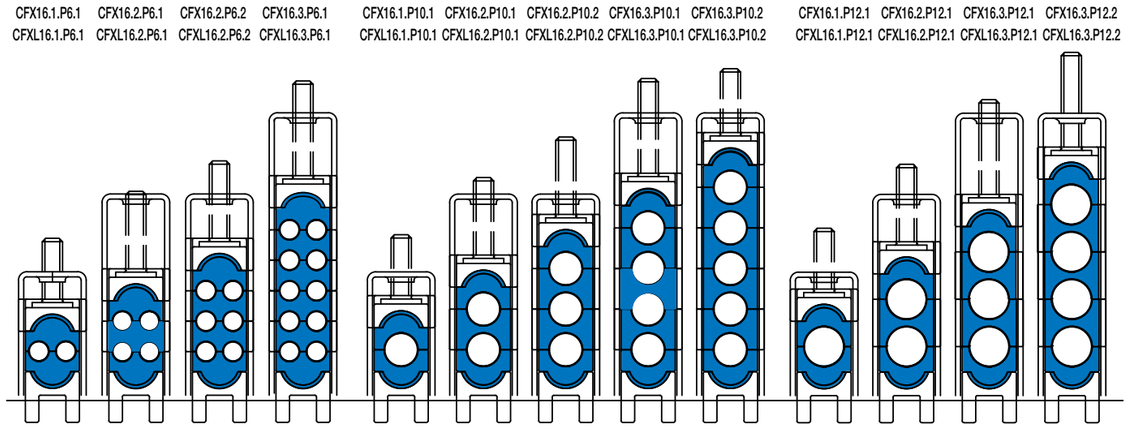

CFX16 - with pneumatic stacker saddles, cable diameter 6mm / 10mm / 12mm.

Available from stock
Upon request



Levels stackable within the KMA mounting bracket

Easy strain relief with cable tiewraps

Many cables types together in a compact system

Stackable, space-saving, flexible - chainfix multi-tiewrap plate

When many cables have to be safely strain relieved in a confined space, the stackable multi-tiewrap plates with intuitive design are ideal.

- Flexible modular system with stackable levels
- Based on the proven tiewrap plate principle
- Space-saving - strain relief for many cables in a confined space
- Cost-effective alternative to multiple clamps or PU strain relief blocks
- All cables strain relieved in one system
- No additional upstream tiewrap plate necessary
- Space and material saving design

Available from stock
Upon request

Assembly instructions | Multi-tiewrap plate

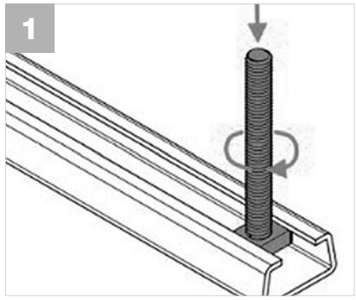

Insert threaded bolt and turn 90° ...

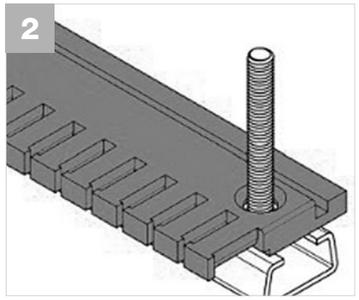

place the lower tiewrap plate ...

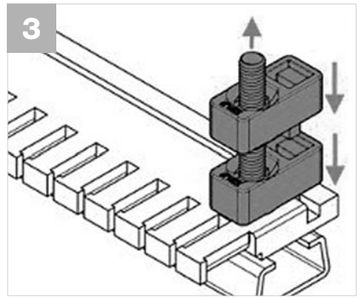

Push the spacer down, at the same time pull the threaded bolt upwards ...

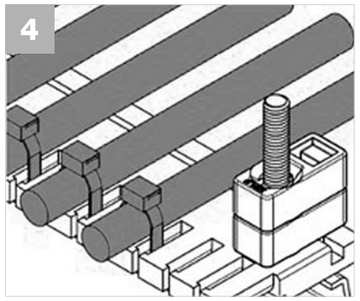

Secure the cables with cable ties ...

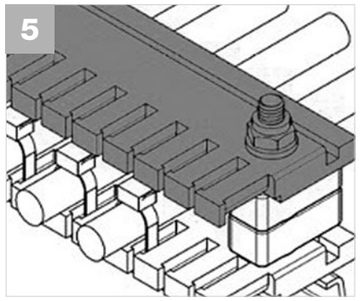

Mount the upper tiewrap plate, washers and nuts ...

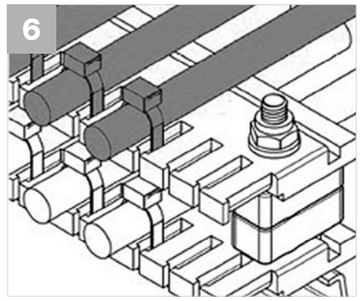

Secure the cables with cable tiewrap - done!

Structure | Multi-tiewrap plate

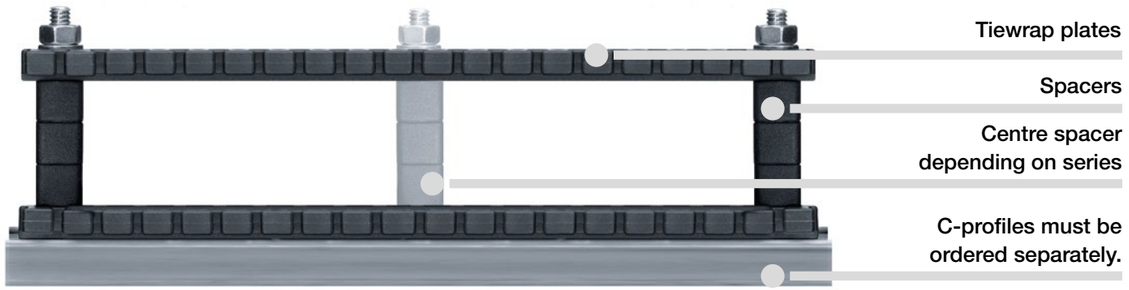

Available from stock
Upon request

chainfix strain relief | Multi-tiewrap plates

Product range | Installation dimensions

Multi-tiewrap plates series 3000

- Flexible modular system with stackable levels
- Stackable in all mounting brackets with C-profile
- Screwed on KMA with C-profile (KMA = plastic metal mounting bracket)
- Proven tiewrap plate principle of series 3000
- Reliable strain relief in the tightest of spaces
- All cables strain relieved in one system



Installation dimensions	Description
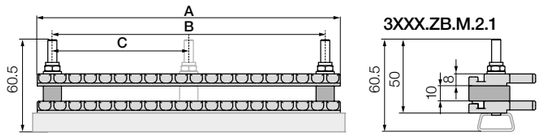	❶ **Series 3XXX.ZB.M.2.1** with 2 tiewrap plates and 1 layer of spacers
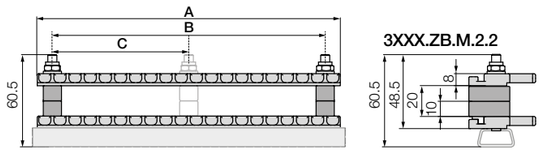	❷ **Series 3XXX.ZB.M.2.2** with 2 tiewrap plates and 2 layers of spacers
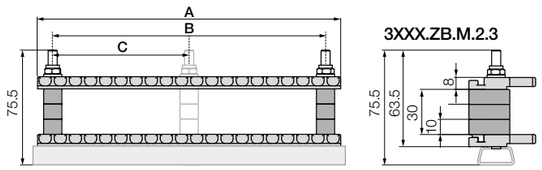	❸ **Series 3XXX.ZB.M.2.3i** with 2 tiewrap plates and 3 layers of spacers
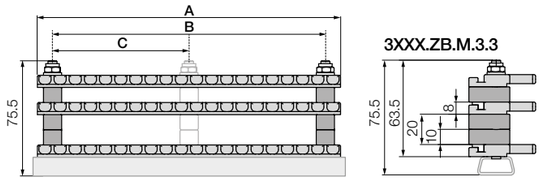	❹ **Series 3XXX.ZB.M.3.3** with 3 tiewrap plates and 3 layers of spacers
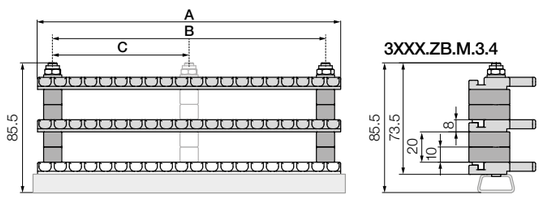	❺ **Series 3XXX.ZB.M.3.4** with 3 tiewrap plates and 4 layers of spacers

For the following series
E2.1
● E2.38
● E2.48
E4Q
● E4Q.34/H4Q.34
● E4Q.44/H4Q.44
● E4Q.58/H4Q.58
● E4Q.82/H4Q.82
E4.1
● E4.32/H4.32/R4.32
● E4.42/H4.42/R4.42
● E4.56/H4.56/R4.56
● E4.80/H4.80/R4.80
● E4.112/R4.112
● E4.162
● 800
● 840
E4.1L
● E4.38L/R4.38L
● E4.48L/R4.48L
● E4.64L
E4/light
● 14040/14140/18840
● 14240/14340
● 14550/14650/19050
● 15050/15150/19850
● 15250/15350
● 1640/1608
E6 / C6
● E6.52/R6.52
● C6.53
● E6.62
● E6.80L
● E6.80

chainfix strain relief | Tiewrap plates

Product range | Installation dimensions

Part No. Tiewrap plates	Installation height H [mm]	Tiewrap plates quantity [pcs.]	Spacers quantity [pcs.]	Number of teeth tiewrap plate [n]	Dimensions A	Dimensions B	Dimensions C	Centre bore
❶ Series 3XXX.ZB.M.2.1 with 2 tiewrap plates and 1 layer of spacers								
3075.ZB.M.2.1	60.5	2	1	7	75	55	–	no
3100.ZB.M.2.1	60.5	2	1	10	100	80	–	no
3115.ZB.M.2.1	60.5	2	1	11	115	95	–	no
3125.ZB.M.2.1	60.5	2	1	12	125	105	–	no
3150.ZB.M.2.1	60.5	2	1	15	150	130	–	no
3175.ZB.M.2.1	60.5	2	1	17	175	155	–	no
3200.ZB.M.2.1	60.5	2	1	20	200	180	90	yes
3225.ZB.M.2.1	60.5	2	1	22	225	205	102.5	yes
3250.ZB.M.2.1	60.5	2	1	25	250	230	115	yes
❷ Series 3XXX.ZB.M.2.2 with 2 tiewrap plates and 2 layers of spacers								
3075.ZB.M.2.2	60.5	2	2	7	75	55	–	no
3100.ZB.M.2.2	60.5	2	2	10	100	80	–	no
3115.ZB.M.2.2	60.5	2	2	11	115	95	–	no
3125.ZB.M.2.2	60.5	2	2	12	125	105	–	no
3150.ZB.M.2.2	60.5	2	2	15	150	130	–	no
3175.ZB.M.2.2	60.5	2	2	17	175	155	–	no
3200.ZB.M.2.2	60.5	2	2	20	200	180	90	yes
3225.ZB.M.2.2	60.5	2	2	22	225	205	102.5	yes
3250.ZB.M.2.2	60.5	2	2	25	250	230	115	yes
❸ Series 3XXX.ZB.M.2.3 with 2 tiewrap plates and 3 layers of spacers								
3075.ZB.M.2.3	75.5	2	3	7	75	55	–	no
3100.ZB.M.2.3	75.5	2	3	10	100	80	–	no
3115.ZB.M.2.3	75.5	2	3	11	115	95	–	no
3125.ZB.M.2.3	75.5	2	3	12	125	105	–	no
3150.ZB.M.2.3	75.5	2	3	15	150	130	–	no
3175.ZB.M.2.3	75.5	2	3	17	175	155	–	no
3200.ZB.M.2.3	75.5	2	3	20	200	180	90	yes
3225.ZB.M.2.3	75.5	2	3	22	225	205	102.5	yes
3250.ZB.M.2.3	75.5	2	3	25	250	230	115	yes
❹ Series 3XXX.ZB.M.3.3 with 3 tiewrap plates and 3 layers of spacers								
3075.ZB.M.3.3	75.5	3	3	7	75	55	–	no
3100.ZB.M.3.3	75.5	3	3	10	100	80	–	no
3115.ZB.M.3.3	75.5	3	3	11	115	95	–	no
3125.ZB.M.3.3	75.5	3	3	12	125	105	–	no
3150.ZB.M.3.3	75.5	3	3	15	150	130	–	no
3175.ZB.M.3.3	75.5	3	3	17	175	155	–	no
3200.ZB.M.3.3	75.5	3	3	20	200	180	90	yes
3225.ZB.M.3.3	75.5	3	3	22	225	205	102.5	yes
3250.ZB.M.3.3	75.5	3	3	25	250	230	115	yes
❺ Series 3XXX.ZB.M.3.4 with 3 tiewrap plates and 4 layers of spacers								
3075.ZB.M.3.4	85.5	3	4	7	75	55	–	no
3100.ZB.M.3.4	85.5	3	4	10	100	80	–	no
3115.ZB.M.3.4	85.5	3	4	11	115	95	–	no
3125.ZB.M.3.4	85.5	3	4	12	125	105	–	no
3150.ZB.M.3.4	85.5	3	4	15	150	130	–	no
3175.ZB.M.3.4	85.5	3	4	17	175	155	–	no
3200.ZB.M.3.4	85.5	3	4	20	200	180	90	yes
3225.ZB.M.3.4	85.5	3	4	22	225	205	102.5	yes
3250.ZB.M.3.4	85.5	3	4	25	250	230	115	yes

chainfix strain relief | Tiewrap plates

Product range | Series 2000 tiewrap plate as an individual part

chainfix tiewrap plate series 2000

- Available as an individual component
- Available screwed on KMA with C-profile as **.S** variant, incl. two screws and nuts (KMA = plastic metal mounting bracket)
- Can be clipped onto some mounting brackets
- Can be used as an individual part in switchgear cabinets or in the assembly of machines

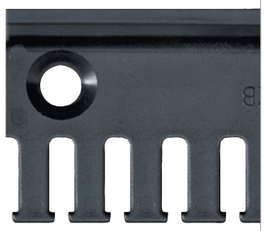

Part No. as individual part	Part No. for KMA with C-profile*	Number of teeth [n]	A [mm]	B [mm]	C [mm]	Centre bore
2020.ZB[1)]	**2020.ZB.S**[1)]	3	30	15	–	no
2030.ZB	**2030.ZB.S**	4	40	20	–	no
2040.ZB	**2040.ZB.S**	5	50	30	–	no
2050.ZB	**2050.ZB.S**	6	58	40	–	no
2070.ZB	**2070.ZB.S**	8	80	60	–	no
2090.ZB[2)]	**2090.ZB.S**[2)]	9	90	–	–	no
2100.ZB	**2100.ZB.S**	10	100	80	–	no
2125.ZB[3)]	**2125.ZB.S**[3)]	12	116	–	–	no

1) Not suitable for E4.21.030. series.
2) Consisting of 2 tiewrap plates: 2030.ZB + 2040.ZB.
3) Consisting of 2 tiewrap plates: 2050.ZB + 2050.ZB.
*Available screwed on KMA with C-profile as **.S** variant, incl. two screws and nuts.

For the following series
easy chain®
● E/Z200
E2.1
● E2.21
● E2.26
E4.1
● E4.21
E6
● E6.29/R6.29
● E6.35
● E6.40

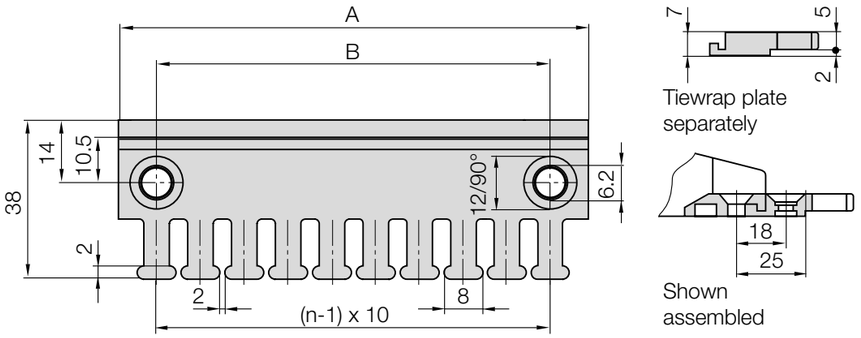

Part No. cable tiewraps 100-piece bag	Width x length [mm]	≤ ø [mm]	Tensile strength [N]
CFB.001	4.8 x 150	36	222 N

Available from stock
Upon request

chainfix

chainfix strain relief | Tiewrap plates

Product range | Series 3000 tiewrap plate as an individual part

chainfix tiewrap plate series 3000

- Suitable for stackable, space-saving chainfix multi-tiewrap plates
- Available as an individual component
- Available screwed on KMA with C-profile as **.S** variant, incl. two screws and nuts (KMA = plastic metal mounting bracket)
- Can be clipped onto some mounting brackets
- Can be used as an individual part in switchgear cabinets or in the assembly of machines



Part No. as individual part	Part No. for KMA with C-profile*	Number of teeth [n]	A [mm]	B [mm]	C [mm]	Centre bore
3050.ZB	**3050.ZB.S**	5	50	30	–	no
3075.ZB	**3075.ZB.S**	7	75	55	–	no
3100.ZB	**3100.ZB.S**	10	100	80	–	no
3115.ZB	**3115.ZB.S**	11	115	95	–	no
3125.ZB	**3125.ZB.S**	12	125	105	–	no
3150.ZB	**3150.ZB.S**	15	150	130	–	no
3175.ZB	**3175.ZB.S**	17	175	155	–	no
3200.ZB	**3200.ZB.S**	20	200	180	90	yes
3225.ZB	**3225.ZB.S**	22	225	205	102.5	yes
3250.ZB	**3250.ZB.S**	25	250	230	115	yes

*Available screwed on KMA with C-profile as **.S** variant, incl. two screws and nuts.

For the following series
easy chain®
● E/Z26
● E/Z300
E2.1
● E2.38
● E2.48
E4Q
● E4Q.34/H4Q.34
● E4Q.44/H4Q.44
● E4Q.58/H4Q.58
● E4Q.82/H4Q.82
E4.1
● E4.32/H4.32/R4.32
● E4.42/H4.42/R4.42
● E4.56/H4.56/R4.56
● E4.80/H4.80/R4.80
● E4.112/R4.112
● E4.162
● 800
● 840
E4.1L
● E4.38L/R4.38L
● E4.48L/R4.48L
● E4.64L
E4/light
● 14040/14140/18840
● 14240/14340
● 14550/14650/19050
● 15050/15150/19850
● 15250/15350
● 1640/1608
E6 / C6
● E6.52/R6.52/C6.53
● E6.62
● E6.80L
● E6.80

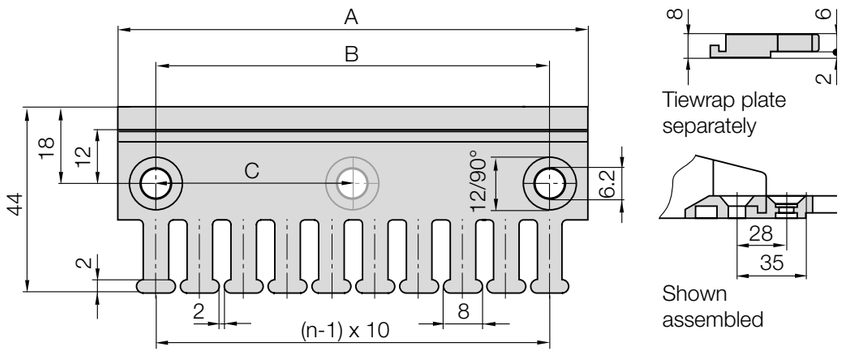

Part No. cable tiewraps 100-piece bag	Width x length [mm]	≤ ø [mm]	Tensile strength [N]
CFB.001	4.8 x 150	36	222 N

Available from stock
Upon request

chainfix strain relief | Tiewrap plates

Product range | Option 01

chainfix tiewrap plates with clip-on connection to C-profile
- Can be "clipped" into the KMA C-profile
- Easy to assemble without any screws
- Easy to remove with screwdriver but secure when in use
- Can be used as an individual part in switchgear cabinets or in the assembly of machines



Part No. Tiewrap plate	Width [mm]	Number of teeth [n]	For series
3050.ZC	50	5	For all mounting brackets with C-profile
3075.ZC	75	7	For all mounting brackets with C-profile

For the following series
- For all mounting brackets with C-profile

Product range | Option 02

chainfix strain relief tooth for top-hat (DIN) rail 15 (TS92.31)
- Can be clipped into top-hat (DIN) rails
- Width per strain relief tooth: 10mm
- Four ZE teeth on each side are required for a 40mm inner width
- Easy to retrofit
- Simple installation into top-hat (DIN) rail 15 (TS92.31)



Part No. Tiewrap plate	Width [mm]	Number of teeth [n]	For series
2010.ZH	10	1	E4.31L / R4.31L

For the following series
- For all top-hat (DIN) rails 15 TS92.31

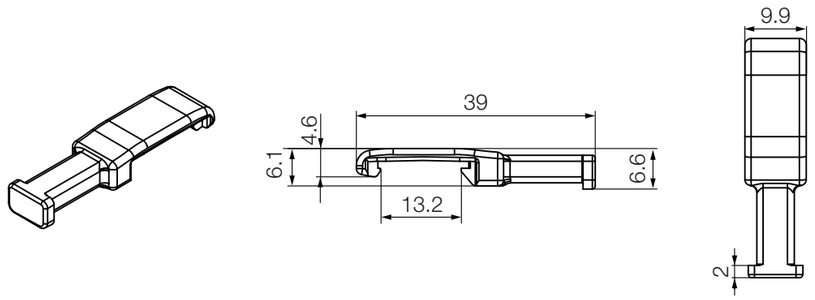

Available from stock
Upon request

chainfix strain relief | Tiewrap plates

Product range | Option 03

chainfix tiewrap plates for fixed crossbars
- Can be clipped on fixed crossbars
- For use with many harnessed cables
- If the KMA is too small for C-profile
- Easy to assemble without any screws

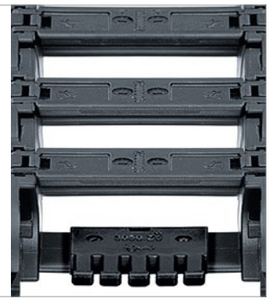

Part No. Tiewrap plate	Width [mm]	Number of teeth [n]	For series
2050.Z	60	6	E/Z200, E2.26
C.2.522.050.ZS	48	4	E2.38, E2.48
C.2.522.065.ZS	63	6	E2.38, E2.48
C.2.522.075.ZS	73	7	E2.38, E2.48

For the following series easy chain®
- E/Z200

E2.1
- E2.26
- E2.38
- E2.48

Product range | Option 04

chainfix tiewrap plates for openable crossbars
- Can be clipped on openable crossbars
- For use with many harnessed cables
- If the KMA is too small for C-profile
- Easy to assemble without any screws



Part No. Tiewrap plate	Width [mm]	Number of teeth [n]	For series
2050.Z	60	6	E4.28, E6.52
3850.ZS	48	5	E4.32, E4.42, 14240, 15250, E6.62, YE.42
3875.ZS	74	7	E4.32, E4.42, 14240, 15250, E6.62
4550.ZS	74	5	E4.56, E4.80, E4.112, 14040,14550, 15050, 1640, E6.80L, E6.80, YE.56, YEHD.108, YEHD.112
4575.ZS	80	7	E4.56, E4.80, E4.112, 14040 14550, 15050, 1640 E6.80L, E6.80, YE.56, YEHD.108, YEHD.112
C622.100.ZS	80	8	E4.38L, E4.48L
C825.075.ZS	70	11	E4Q.34, E4Q.44, E4Q.58, E4Q.82
C1132.080.ZS	80	13	E4Q.34, E4Q.44, E4Q.58, E4Q.82

For the following series

E4Q

E4Q.L

E4.1

E4.1L

E4/light

Available from stock
Upon request

Product range | Strain relief separators

Separators with integrated strain relief teeth

- To be fitted at the first and last e-chain® link
- For restricted space conditions
- Easy to assemble without any screws
- The number "n" depends on the selection of the cables (diameter, type) and the available space



Part No.	For series	Number of teeth [n]	A [mm]	B [mm]	C [mm]	D [mm]
21.1.Z	E2.21	4	10	4	–	6
26.Z*	E2.26	6	12	3	–	7
R2.26.Z	R2.26	4	10	3	–	6
R2.40.Z	R2.40	8	12	3	–	7
T2103.Z	E4.21	2	8	4	1	4
28.Z	E4.28	4	10	4	–	6
28.ZT	R4.28	4	10	4	15	6
31.Z	E4.31L/R4.31L	4	9	4	6	6
38.Z	E4.38L/R4.38L	4	14	4.5	8	15
48.Z	E4.48L/R4.48L	4	14	4.5	8	20
48.ZS	E4.48L/R4.48L	4	14	4.5	8	20
C6.29.5.Z	C6.29	2	10	2.5	–	4
C6.38.5.Z	C6.38	3	10	2.5	–	8
E6.29.02.Z	E6.29	2	8	4	1	4
R6.29.02.Z	R6.29	2	10	4	10	4
E6.35.02.Z	E6.35	3	8	4	1	4
E6.40.02.Z	E6.40	3	13	4	–	8

*For KMA mounting bracket only.

For the following series
E2.1
● E2.21
● E2.26
R2.1
● R2.26
● R2i.40
E4.1
● E4.32/H4.32/R4.32
● E4.42/H4.42/R4.42
E4.1L
● E4.31L/R4.31L
● E4.38L/R4.38L
● E4.48L/R4.48L
E6 / C6
● E6.29 / R6.29
● C6.29
● E6.35
● C6.38
● E6.40

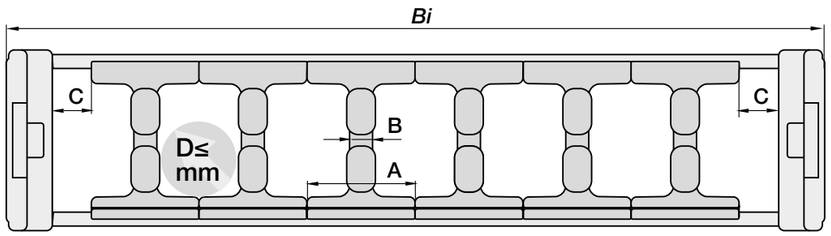

Available from stock
Upon request

chainfix strain relief | Clip-on solutions

Strain relief separator | Overview

For series E2.1 e-chains®



E2.21 e-chains®	
unassembled	21.1.Z
assembled	21.1.Z1.1



E2.26 e-chains®	
unassembled	26.Z
assembled	26.Z.1

For series R2.1 e-tubes



R2.26 e-tubes	
unassembled	R2.26.Z
assembled	R2.26.Z.1



R2.40 e-tubes	
unassembled	R2.40.Z
assembled	R2.40.Z.1

For series E4.1



E4.28 e-chains®	
unassembled	28.Z
assembled	28.Z.1



R4.28 e-tubes	
unassembled	28.ZT
assembled	28.ZT.1



E4.21 e-chains®	
unassembled	T2103.Z
assembled	T2113.Z

For series C6



C6.29 e-chains®	
unassembled	C6.29.5.Z
assembled	C6.29.5.Z.1



C6.38 e-chains®	
unassembled	C6.38.5.Z
assembled	C6.38.5.Z.1

For series E4.1L



E4.31L/R4.31L e-chains®/e-tubes	
unassembled	31.Z
assembled	31.Z.1



E4.38L/R4.38L e-chains®/e-tubes	
unassembled	38.Z
assembled	38.Z.1



E4.48L/R4.48L e-chains®/e-tubes	
unassembled	48.Z
assembled	48.Z.1



E4.48L/R4.48L e-chains®/e-tubes	
unassembled	48.ZS
assembled	48.ZS.1

For series E6/R6



E6.29 e-chains®	
unassembled	E6.29.02.Z
assembled	E6.29.12.Z



R6.29 e-tubes	
unassembled	R6.29.02.Z
assembled	R6.29.12.Z



E6.35 e-chains®	
unassembled	E6.35.02.Z
assembled	E6.35.12.Z



E6.40 e-chains®	
unassembled	E6.40.02.Z
assembled	E6.40.12.Z

chainfix strain relief | Clip-on solutions

Product range | Series CFV | Strain relief elements with tiewrap teeth

Stepped strain relief for use outside of the e-chain® section

- Easy strain relief for cables, even in fully enclosed tubes and with different connectors
- For e-chains® and e-tubes
- Subsequent installation into KMA mounting bracket or top-hat (DIN) rail 15 (TS92.31) possible



Part No.	For series	Inner height *hi* [mm]	For use in
CFV.31.N15	**E4.31L/R4.31L**	31	Top-hat (DIN) rail 15
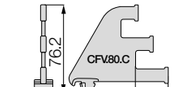			
CFV.R2.26.Z	**R2.26**	26	KMA
CFV.R2.40.Z	**R2.40**	40	KMA
CFV.R2.48.Z	**R2.48**	48	KMA
CFV.42.C	**E4Q.34/H4Q.34**	34	KMA
	E4.32/H4.32/R4.32	32	KMA
	E4Q.44/H4Q.44	44	KMA
	E4.42/H4.42/R4.42	42	KMA
	E4.38L/R4.38L	38	KMA
	E4.48L/R4.48L	48	KMA
	14040/14140/18840	56	KMA
	14240/14340	62	KMA
	E6.40	40	KMA
	E6.52/R6.52	52	KMA
	C6.53	53	KMA
	E4Q.64L	64	KMA
CFV.80.C	**R2.75**	75	KMA
	E4.64L	64	KMA
	E4Q.58/H4Q.58	58	KMA
	E4.56/H4.56/R4.56	56	KMA
	E4Q.82/H4Q.82	82	KMA
	E4.80/H4.80/R4.80	80	KMA
	14550/14650/19050	70	KMA
	15050/15150/19850	80	KMA
	15250/15350	86	KMA
	1640/1608	112	KMA
	E6.62	62	KMA
	E6.80 / E6.80L	80	KMA

For the following series
R2.1
● R2.26
● R2.40
● R2.48
● R2.75
E4Q
● E4Q.34/H4Q.34
● E4Q.44/H4Q.44
● E4Q.58/H4Q.58
● E4Q.82/H4Q.82
E4Q.L
● E4Q.64L
E4.1
● E4.32/H4.32/R4.32
● E4.42/H4.42/R4.42
E4.1L
● E4.31L/R4.31L
● E4.38L/R4.38L
● E4.48L/R4.48L
● E4.64L
E4/light
● 14040/14140/18840
● 14240/14340
● 14550/14650/19050
● 15050/15150/19850
● 15250/15350
● 1640/1608
E6 / C6
● E6.40
● E6.52/R6.52/C6.53
● E6.62
● E6.80L
● E6.80

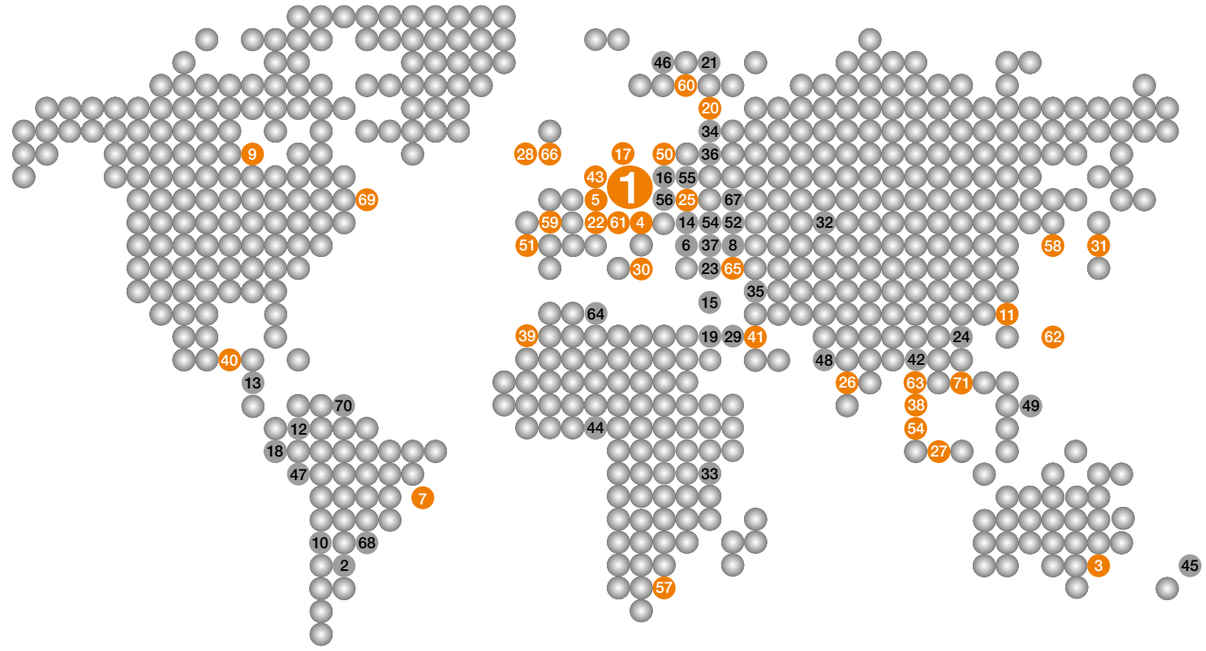

igus® GmbH location
igus® is now represented all over the world. In addition to our headquarters in Germany, we also have subsidiaries in the following countries (in alphabetical order):
Australia, Austria, Belgium, Brazil, Canada, China, Denmark, Estonia, France, Hungary, India, Indonesia, Ireland, Italy, Japan, Korea, Malaysia, Mexico, Middle East, Morocco, the Netherlands, Poland, Portugal, Singapore, South Africa, Spain, Sweden, Switzerland, Taiwan, Thailand, Turkey, the UK, the USA and Vietnam.

We also have distributors who represent us in many other countries, which means that we are active in over 80 countries worldwide.

Your contact persons
In every country in which we are represented, you will have a personal igus® consultant at your side. You can view the contact persons for sales, purchasing and general enquiries according to country or continent:

www.igus.eu/contact

igus®.eu/8pm

Place your orders until late. Ordering and deliveries weekdays from 7.00am to 8.00pm, Saturday from 8.00am to 12.00pm.
No minimum order quantity, no surcharges. Quick delivery.
www.igus.eu Phone +49-2203 9649-800 Fax -222

igus®.eu/24

Buy online - 24hrs! www.igus.eu

/9001:2015
/16949:2016
/14001:2015

igus® is certified in accordance with ISO 9001:2015 and IATF 16949:2016 in the field of energy supply systems, cables and harnessing, as well as plastic bearings. igus® is certified according to ISO 14001:2015.

/readychain®

Ask for fully harnessed and pre-assembled energy supply systems - immediately increase your cash-flow and profit with readychain®.
www.igus.eu/readychain

/newsletter

Free of charge! Learn more about trends and innovations from the igus® motion plastics® world. Register here: www.igus.eu/newsletter

igus®.eu

igus® GmbH Spicher Straße 1a 51147 Cologne, Germany
Phone: +49-2203 9649-800 Fax +49-2203 9649-222
info@igus.de www.igus.eu

© igus® GmbH, Germany

Subject to technical alterations. MAT0072320.20 Issue 04/2025

igus®