Model SBK

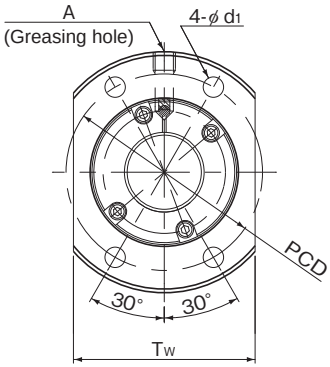

Model No.	Screw shaft outer diameter	Lead	Ball center-to-center diameter	Thread minor diameter	No. of loaded circuits	Basic load rating		Rigidity
						Ca	C_0a	K
	d	Ph	dp	dc	Rows X turns	kN	kN	N/μm
SBK 1520-3.6	15	20	15.75	12.2	1×1.8	5.8	7.8	178
SBK 1616-3.6	16	16	16.65	13.5	1×1.8	4.6	6.4	182
SBK 2010-5.6	20	10	20.75	17.2	1×2.8	10.7	17.3	353
SBK 2020-3.6	20	20	20.75	17.2	1×1.8	7	10.5	229
SBK 2030-3.6	20	30	20.75	17.2	1×1.8	6.9	11.2	236
SBK 2520-3.6	25	20	26	21.5	1×1.8	11	16.9	292
SBK 2525-3.6	25	25	26	21.5	1×1.8	10.8	16.9	290
SBK 3220-5.6	32	20	33.25	27.9	1×2.8	23.6	41.1	565
SBK 3232-5.6	32	32	33.25	27.9	1×2.8	23.1	41.8	567

Axial Clearance

Unit: mm

Clearance symbol	G0
Axial Clearance	0 or less

Model number coding

SBK2525-3.6 QZ G0 +1200L C5

- SBK2525-3.6: Model Number
- QZ: With QZ Lubricator (no symbol if the model is without a QZ Lubricator)
- G0: Symbol for clearance in the axial direction (G0 for all SBK variations)
- +1200L: Overall screw shaft length (in mm)
- C5: Accuracy symbol (*1)

(*1) See A15-12.

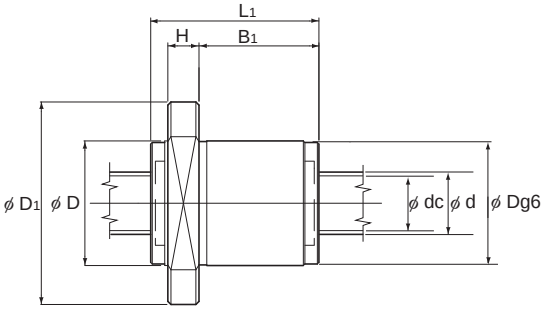

Unit: mm

	Nut dimensions									Screw shaft inertial moment/mm	Nut mass	Shaft mass	Maximum permissible rotation speed
	Outer diameter	Flange diameter	Overall length						Greasing hole				
	D	D_1	L_1	H	B_1	PCD	d_1	T_W	A	kg•cm²/mm	kg	kg/m	min^{-1}
	38	62	54	10	38.5	49	5.5	39	M6	3.9×10^{-4}	0.41	1.27	5000
	33	54	45	10	29.5	43	4.5	38	M6	5.05×10^{-4}	0.25	1.46	
	40	65	45	10	29.5	53	5.5	49	M6	1.23×10^{-3}	0.37	2.18	
	40	65	54	10	38.5	53	5.5	49	M6	1.23×10^{-3}	0.43	2.32	
	40	65	71	10	55.5	53	5.5	49	M6	1.23×10^{-3}	0.55	2.36	
	47	74	57	12	38	60	6.6	56	M6	3.01×10^{-3}	0.59	3.58	
	47	74	68	12	49	60	6.6	56	M6	3.01×10^{-3}	0.69	3.63	
	58	92	82	15	58	74	9	68	M6	8.08×10^{-3}	1.23	5.82	3900
	58	92	118	15	94	74	9	68	M6	8.08×10^{-3}	1.70	5.99	

Note) The rigidity values in the table represent the spring constants obtained from the load and the elastic deformation when providing a preload 10% of the basic dynamic load rating (Ca) and applying an axial load three times greater than the preload.
These values do not include the rigidity of the components related to mounting the ball screw nut. Therefore, it is normally appropriate to regard roughly 80% of the value in the table as the actual value.
If the applied preload (Fa_0) is not 0.1 Ca, the rigidity value (K_N) is obtained from the following equation.

$$K_N = K\left(\frac{Fa_0}{0.1Ca}\right)^{\frac{1}{3}}$$

K: Rigidity value in the dimensional table.

Options⇒A15-349